General Aptitude (GA)

Q.1 – Q.5 Multiple Choice Question (MCQ), carry ONE mark each (for each wrong answer: – 1/3).

Q.1	**The current population of a city is 11,02,500. If it has been increasing at the rate of 5% per annum, what was its population 2 years ago?**
(A)	9,92,500
(B)	9,95,006
(C)	10,00,000
(D)	12,51,506

Q.2	**p and q are positive integers and $\frac{p}{q}+\frac{q}{p}=3$,** **then, $\frac{p^2}{q^2}+\frac{q^2}{p^2}=$**
(A)	3
(B)	7
(C)	9
(D)	11

Q.3	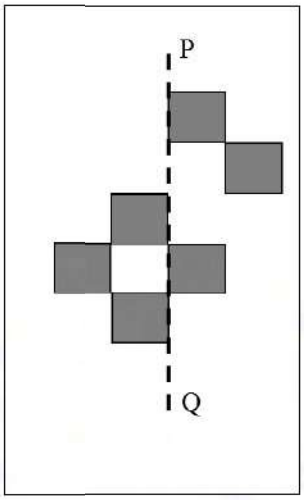 **The least number of squares that must be added so that the line P-Q becomes the line of symmetry is _____**
(A)	4
(B)	3
(C)	6
(D)	7

Q.4	***Nostalgia* is to *anticipation* as _____ is to _____** **Which one of the following options maintains a similar logical relation in the above sentence?**
(A)	Present, past
(B)	Future, past
(C)	Past, future
(D)	Future, present

Q.5	**Consider the following sentences:** **(i) I woke up from sleep.** **(ii) I woked up from sleep.** **(iii) I was woken up from sleep.** **(iv) I was wokened up from sleep.** **Which of the above sentences are grammatically CORRECT?**
(A)	(i) and (ii)
(B)	(i) and (iii)
(C)	(ii) and (iii)
(D)	(i) and (iv)

Q. 6 – Q. 10 Multiple Choice Question (MCQ), carry TWO marks each (for each wrong answer: – 2/3).

Q.6	**Given below are two statements and two conclusions.** **Statement 1: All purple are green.** **Statement 2: All black are green.** **Conclusion I: Some black are purple.** **Conclusion II: No black is purple.** **Based on the above statements and conclusions, which one of the following options is logically CORRECT?**
(A)	Only conclusion I is correct.
(B)	Only conclusion II is correct.
(C)	Either conclusion I or II is correct.
(D)	Both conclusion I and II are correct.

Q.7	**Computers are ubiquitous. They are used to improve efficiency in almost all fields from agriculture to space exploration. Artificial intelligence (AI) is currently a hot topic. AI enables computers to learn, given enough training data. For humans, sitting in front of a computer for long hours can lead to health issues.** **Which of the following can be deduced from the above passage?** (i) **Nowadays, computers are present in almost all places.** (ii) **Computers cannot be used for solving problems in engineering.** (iii) **For humans, there are both positive and negative effects of using computers.** (iv) **Artificial intelligence can be done without data.**
(A)	(ii) and (iii)
(B)	(ii) and (iv)
(C)	(i), (iii) and (iv)
(D)	(i) and (iii)

Q.8	**Consider a square sheet of side 1 unit. In the first step, it is cut along the main diagonal to get two triangles. In the next step, one of the cut triangles is revolved about its short edge to form a solid cone. The volume of the resulting cone, in cubic units, is _____**
(A)	$\frac{\pi}{3}$
(B)	$\frac{2\pi}{3}$
(C)	$\frac{3\pi}{2}$
(D)	3π

Q.9

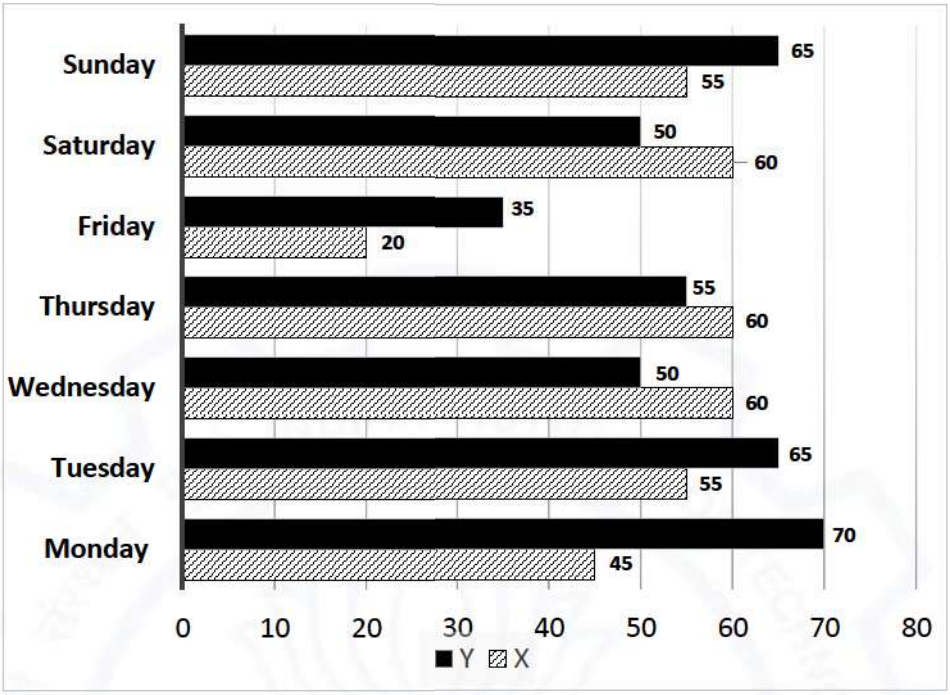

The number of minutes spent by two students, X and Y, exercising every day in a given week are shown in the bar chart above.

The number of days in the given week in which one of the students spent a minimum of 10% more than the other student, on a given day, is

(A)	4
(B)	5
(C)	6
(D)	7

Q.10	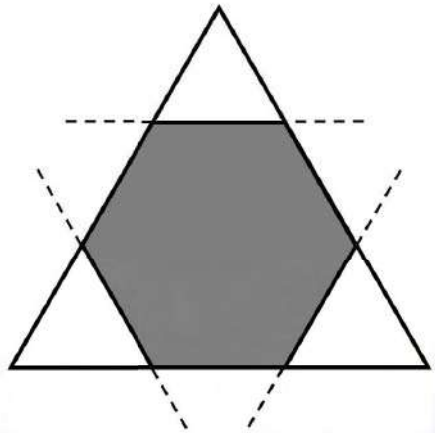 **Corners are cut from an equilateral triangle to produce a regular convex hexagon as shown in the figure above.** **The ratio of the area of the regular convex hexagon to the area of the original equilateral triangle is**
(A)	2 : 3
(B)	3 : 4
(C)	4 : 5
(D)	5 : 6

Electronics and Communication Engineering (EC)

Q.1 – Q.15 Multiple Choice Question (MCQ), carry ONE mark each (for each wrong answer: – 1/3).

Q.1	**The vector function $\mathbf{F}(\mathbf{r}) = -x\,\hat{\imath} + y\,\hat{\jmath}$ is defined over a circular arc C shown in the figure.** 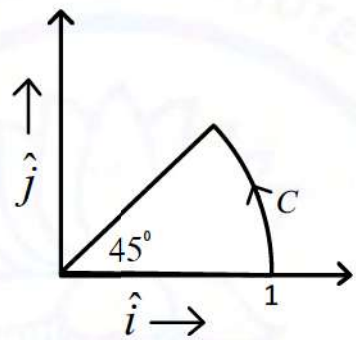 **The line integral of $\int_C \mathbf{F}(\mathbf{r}).d\mathbf{r}$ is**
(A)	$\frac{1}{2}$
(B)	$\frac{1}{4}$
(C)	$\frac{1}{6}$
(D)	$\frac{1}{3}$

Q.2	**Consider the differential equation given below.** $$\frac{dy}{dx} + \frac{x}{1-x^2}y = x\sqrt{y}$$ **The integrating factor of the differential equation is**
(A)	$(1-x^2)^{-3/4}$
(B)	$(1-x^2)^{-1/4}$
(C)	$(1-x^2)^{-3/2}$
(D)	$(1-x^2)^{-1/2}$

Q.3	**Two continuous random variables X and Y are related as** $$Y = 2X + 3$$ **Let σ_X^2 and σ_Y^2 denote the variances of X and Y, respectively. The variances are related as**
(A)	$\sigma_Y^2 = 2\,\sigma_X^2$
(B)	$\sigma_Y^2 = 4\,\sigma_X^2$
(C)	$\sigma_Y^2 = 5\,\sigma_X^2$
(D)	$\sigma_Y^2 = 25\,\sigma_X^2$

Q.4	**Consider a real-valued base-band signal $x(t)$, band limited to 10 kHz. The Nyquist rate for the signal $y(t) = x(t)\,x\left(1+\frac{t}{2}\right)$ is**
(A)	15 kHz
(B)	30 kHz
(C)	60 kHz
(D)	20 kHz

Q.5	**Consider two 16-point sequences $x[n]$ and $h[n]$. Let the linear convolution of $x[n]$ and $h[n]$ be denoted by $y[n]$, while $z[n]$ denotes the 16-point inverse discrete Fourier transform (IDFT) of the product of the 16-point DFTs of $x[n]$ and $h[n]$. The value(s) of k for which $z[k] = y[k]$ is/are**
(A)	$k = 0, 1, 2, \ldots, 15$
(B)	$k = 0$
(C)	$k = 15$
(D)	$k = 0$ and $k = 15$

Q.6	**A bar of silicon is doped with boron concentration of 10^{16} cm^{-3} and assumed to be fully ionized. It is exposed to light such that electron-hole pairs are generated throughout the volume of the bar at the rate of 10^{20} cm^{-3}s^{-1}. If the recombination lifetime is 100 μs, intrinsic carrier concentration of silicon is 10^{10} cm^{-3} and assuming 100% ionization of boron, then the approximate product of steady-state electron and hole concentrations due to this light exposure is**
(A)	10^{20} cm^{-6}
(B)	2×10^{20} cm^{-6}
(C)	10^{32} cm^{-6}
(D)	2×10^{32} cm^{-6}

Q.7	**The energy band diagram of a p-type semiconductor bar of length L under equilibrium condition (*i.e.*, the Fermi energy level E_F is constant) is shown in the figure. The valance band E_V is sloped since doping is non-uniform along the bar. The difference between the energy levels of the valence band at the two edges of the bar is Δ.** 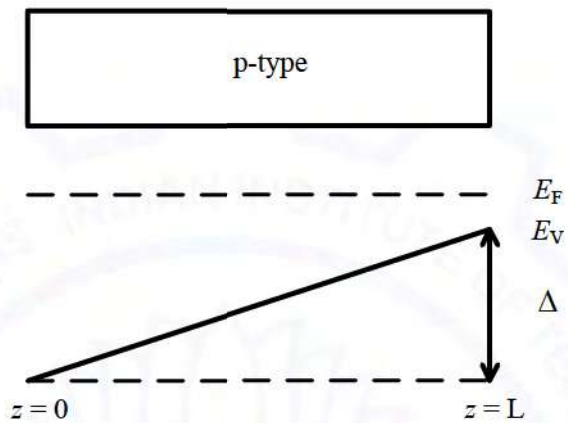 **If the charge of an electron is q, then the magnitude of the electric field developed inside this semiconductor bar is**
(A)	$\frac{\Delta}{qL}$
(B)	$\frac{2\Delta}{qL}$
(C)	$\frac{\Delta}{2qL}$
(D)	$\frac{3\Delta}{2qL}$

Q.8	**In the circuit shown in the figure, the transistors M_1 and M_2 are operating in saturation. The channel length modulation coefficients of both the transistors are non-zero. The transconductance of the MOSFETs M_1 and M_2 are g_{m1} and g_{m2}, respectively, and the internal resistance of the MOSFETs M_1 and M_2 are r_{01} and r_{02}, respectively.** 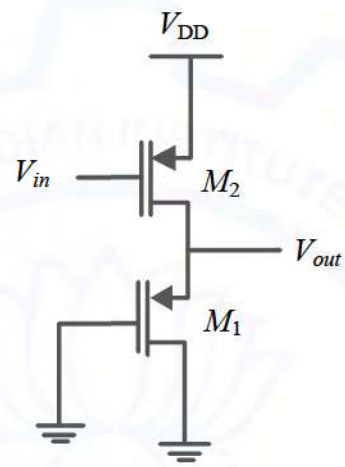 **Ignoring the body effect, the ac small signal voltage gain ($\partial V_{out}/\partial V_{in}$) of the circuit is**
(A)	$-g_{m2}\,(r_{01}\|\|r_{02})$
(B)	$-g_{m2}\left(\frac{1}{g_{m1}}\|\|r_{02}\right)$
(C)	$-g_{m1}\left(\frac{1}{g_{m2}}\|\|r_{01}\|\|r_{02}\right)$
(D)	$-g_{m2}\left(\frac{1}{g_{m1}}\|\|r_{01}\|\|r_{02}\right)$

Q.9	**For the circuit with an ideal OPAMP shown in the figure, V_{REF} is fixed.** 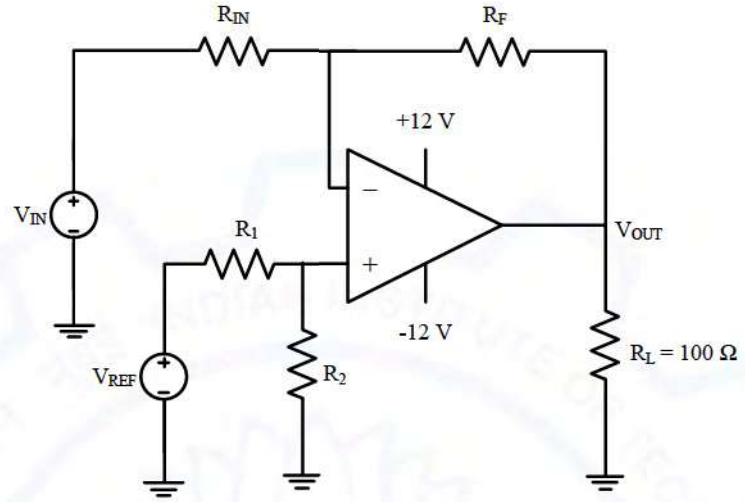 **If V_{OUT} = 1 volt for V_{IN} = 0.1 volt and V_{OUT} = 6 volt for V_{IN} = 1 volt, where V_{OUT} is measured across R_L connected at the output of this OPAMP, the value of R_F/R_{IN} is**
(A)	3.285
(B)	2.860
(C)	3.825
(D)	5.555

Q.10	**Consider the circuit with an ideal OPAMP shown in the figure.** 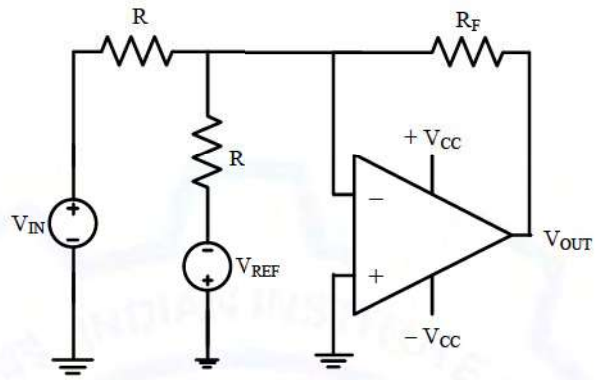 **Assuming $\lvert V_{IN}\rvert \ll \lvert V_{CC}\rvert$ and $\lvert V_{REF}\rvert \ll \lvert V_{CC}\rvert$, the condition at which V_{OUT} equals to zero is**
(A)	$V_{IN} = V_{REF}$
(B)	$V_{IN} = 0.5\ V_{REF}$
(C)	$V_{IN} = 2\ V_{REF}$
(D)	$V_{IN} = 2 + V_{REF}$

Q.11	**If $(1235)_x = (3033)_y$, where x and y indicate the bases of the corresponding numbers, then**
(A)	$x = 7$ and $y = 5$
(B)	$x = 8$ and $y = 6$
(C)	$x = 6$ and $y = 4$
(D)	$x = 9$ and $y = 7$

Q.12	**Addressing of a 32K × 16 memory is realized using a single decoder. The minimum number of AND gates required for the decoder is**
(A)	2^8
(B)	2^{32}
(C)	2^{15}
(D)	2^{19}

Q.13 **The block diagram of a feedback control system is shown in the figure.**

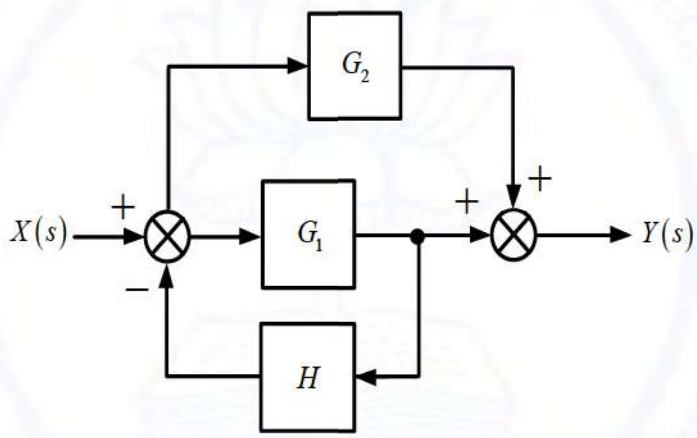

The transfer function $\frac{Y(s)}{X(s)}$ of the system is

(A)	$\frac{G_1 + G_2 + G_1G_2H}{1 + G_1H}$
(B)	$\frac{G_1 + G_2}{1 + G_1H + G_2H}$
(C)	$\frac{G_1 + G_2}{1 + G_1H}$
(D)	$\frac{G_1 + G_2 + G_1G_2H}{1 + G_1H + G_2H}$

Q.14	**The complete Nyquist plot of the open-loop transfer function $G(s)H(s)$ of a feedback control system is shown in the figure.** 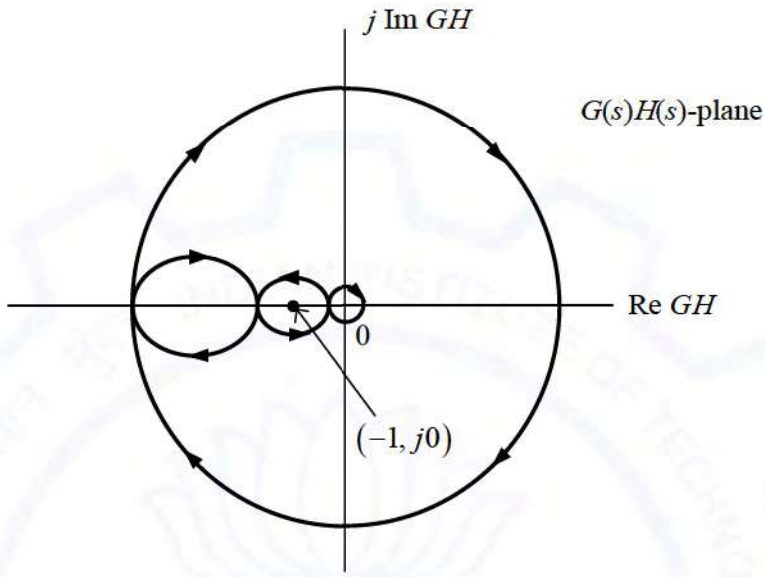 **If $G(s)H(s)$ has one zero in the right-half of the s-plane, the number of poles that the closed-loop system will have in the right-half of the s-plane is**
(A)	0
(B)	1
(C)	4
(D)	3

Q.15	**Consider a rectangular coordinate system (x, y, z) with unit vectors a_x, a_y, and a_z. A plane wave traveling in the region $z \geq 0$ with electric field vector $E = 10\cos(2 \times 10^8 t + \beta z)a_y$ is incident normally on the plane at $z = 0$, where β is the phase constant. The region $z \geq 0$ is in free space and the region $z < 0$ is filled with a lossless medium (permittivity $\varepsilon = \varepsilon_0$, permeability $\mu = 4\mu_0$, where $\varepsilon_0 = 8.85 \times 10^{-12}$ F/m and $\mu_0 = 4\pi \times 10^{-7}$ H/m). The value of the reflection coefficient is**
(A)	$\frac{1}{3}$
(B)	$\frac{3}{5}$
(C)	$\frac{2}{5}$
(D)	$\frac{2}{3}$

Q.16 – Q.25 Numerical Answer Type (NAT), carry ONE mark each (no negative marks).

Q.16	**If the vectors $(1.0,\ -1.0,\ 2.0)$, $(7.0,\ 3.0,\ x)$ and $(2.0,\ 3.0,\ 1.0)$ in $\mathbb{R}^3$ are linearly dependent, the value of x is _____**

Q.17	**Consider the vector field $\mathbf{F} = \mathbf{a}_x(4y - c_1 z) + \mathbf{a}_y(4x + 2z) + \mathbf{a}_z(2y + z)$ in a rectangular coordinate system (x, y, z) with unit vectors $\mathbf{a}_x$, $\mathbf{a}_y$, and $\mathbf{a}_z$. If the field F is irrotational (conservative), then the constant c_1 (*in integer*) is _____**

Q.18 **Consider the circuit shown in the figure.**

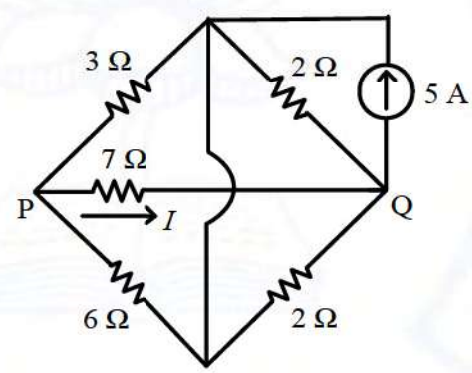

The current I flowing through the 7 Ω resistor between P and Q (*rounded off to one decimal place*) is _____ A.

Q.19 **Consider the circuit shown in the figure.**

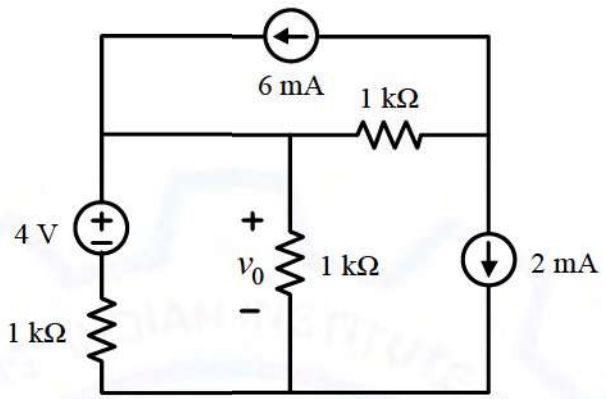

The value of v_0 (*rounded off to one decimal place*) is _____ V.

Q.20 **An 8-bit unipolar (all analog output values are positive) digital-to-analog converter (DAC) has a full-scale voltage range from 0 V to 7.68 V. If the digital input code is 10010110 (the leftmost bit is MSB), then the analog output voltage of the DAC (*rounded off to one decimal place*) is _____ V.**

Q.21	**The autocorrelation function $R_X(\tau)$ of a wide-sense stationary random process $X(t)$ is shown in the figure.** 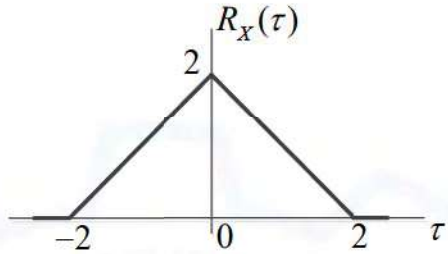 **The average power of $X(t)$ is _____**

Q.22	**Consider a carrier signal which is amplitude modulated by a single-tone sinusoidal message signal with a modulation index of 50%. If the carrier and one of the sidebands are suppressed in the modulated signal, the percentage of power saved (*rounded off to one decimal place*) is _____**

Q.23	**A speech signal, band limited to 4 kHz, is sampled at 1.25 times the Nyquist rate. The speech samples, assumed to be statistically independent and uniformly distributed in the range −5 V to +5 V, are subsequently quantized in an 8-bit uniform quantizer and then transmitted over a voice-grade AWGN telephone channel. If the ratio of transmitted signal power to channel noise power is 26 dB, the minimum channel bandwidth required to ensure reliable transmission of the signal with arbitrarily small probability of transmission error (*rounded off to two decimal places*) is _____ kHz.**

Q.24	**A 4 kHz sinusoidal message signal having amplitude 4 V is fed to a delta modulator (DM) operating at a sampling rate of 32 kHz. The minimum step size required to avoid slope overload noise in the DM (*rounded off to two decimal places*) is _____ V.**

Q.25	**The refractive indices of the core and cladding of an optical fiber are 1.50 and 1.48, respectively. The critical propagation angle, which is defined as the maximum angle that the light beam makes with the axis of the optical fiber to achieve the total internal reflection, (*rounded off to two decimal places*) is _____ degree.**

Q. 26 – Q. 35 Multiple Choice Question (MCQ), carry TWO marks each (for each wrong answer: – 2/3).

Q.26	**Consider the integral** $$\oint_C \frac{\sin(x)}{x^2(x^2+4)}dx$$ **where C is a counter-clockwise oriented circle defined as $\lvert x-i\rvert = 2$. The value of the integral is**
(A)	$-\frac{\pi}{8}\sin(2i)$
(B)	$\frac{\pi}{8}\sin(2i)$
(C)	$-\frac{\pi}{4}\sin(2i)$
(D)	$\frac{\pi}{4}\sin(2i)$

Q.27	**A box contains the following three coins.** **I. A fair coin with head on one face and tail on the other face.** **II. A coin with heads on both the faces.** **III. A coin with tails on both the faces.** **A coin is picked randomly from the box and tossed. Out of the two remaining coins in the box, one coin is then picked randomly and tossed. If the first toss results in a head, the probability of getting a head in the second toss is**
(A)	$\frac{2}{5}$
(B)	$\frac{1}{3}$
(C)	$\frac{1}{2}$
(D)	$\frac{2}{3}$

Q.28	**The switch in the circuit in the figure is in position P for a long time and then moved to position Q at time $t = 0$.** 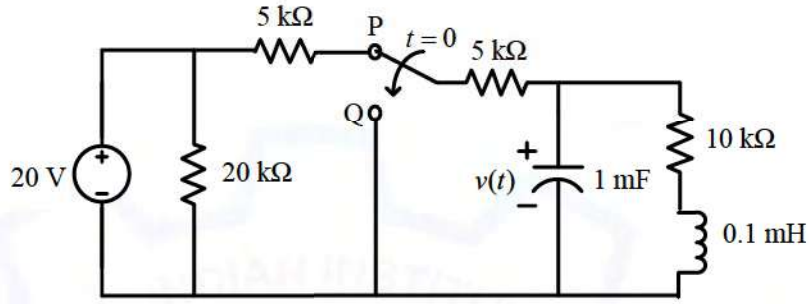 **The value of $\frac{dv(t)}{dt}$ at $t = 0^+$ is**
(A)	0 V/s
(B)	3 V/s
(C)	−3 V/s
(D)	−5 V/s

Q.29	**Consider the two-port network shown in the figure.** 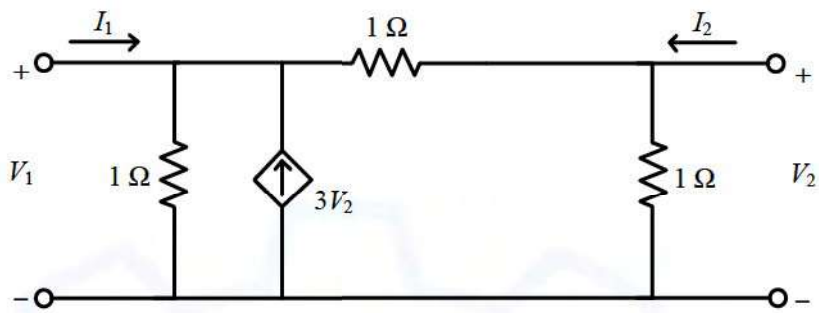 **The admittance parameters, in siemens, are**
(A)	$y_{11} = 2,\ y_{12} = -4,\ y_{21} = -4,\ y_{22} = 2$
(B)	$y_{11} = 1,\ y_{12} = -2,\ y_{21} = -1,\ y_{22} = 3$
(C)	$y_{11} = 2,\ y_{12} = -4,\ y_{21} = -1,\ y_{22} = 2$
(D)	$y_{11} = 2,\ y_{12} = -4,\ y_{21} = -4,\ y_{22} = 3$

Q.30	**For an n-channel silicon MOSFET with 10 nm gate oxide thickness, the substrate sensitivity ($\partial V_T/\partial\lvert V_{BS}\rvert$) is found to be 50 mV/V at a substrate voltage $\lvert V_{BS}\rvert = 2\,V$, where V_T is the threshold voltage of the MOSFET. Assume that, $\lvert V_{BS}\rvert \gg 2\Phi_B$, where $q\Phi_B$ is the separation between the Fermi energy level E_F and the intrinsic level E_i in the bulk. Parameters given are** **Electron charge (q) = 1.6×10^{-19} C** **Vacuum permittivity (ε_0) = 8.85×10^{-12} F/m** **Relative permittivity of silicon (ε_{Si}) = 12** **Relative permittivity of oxide (ε_{ox}) = 4** **The doping concentration of the substrate is**
(A)	7.37×10^{15} cm^{-3}
(B)	4.37×10^{15} cm^{-3}
(C)	2.37×10^{15} cm^{-3}
(D)	9.37×10^{15} cm^{-3}

Q.31	**The propagation delays of the XOR gate, AND gate and multiplexer (MUX) in the circuit shown in the figure are 4 ns, 2 ns and 1 ns, respectively.** 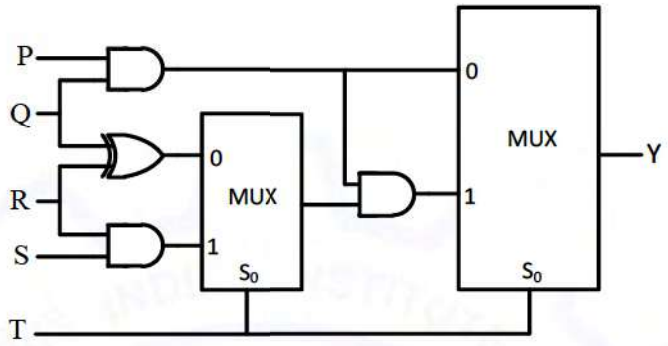 **If all the inputs P, Q, R, S and T are applied simultaneously and held constant, the maximum propagation delay of the circuit is**
(A)	3 ns
(B)	5 ns
(C)	6 ns
(D)	7 ns

Q.32	**The content of the registers are R_1 = 25H, R_2 = 30H and R_3 = 40H. The following machine instructions are executed.** **PUSH{R_1}** **PUSH{R_2}** **PUSH{R_3}** **POP{R_1}** **POP{R_2}** **POP{R_3}** **After execution, the content of registers R_1, R_2, R_3 are**
(A)	$R_1 = 40H,\ \ R_2 = 30H,\ \ R_3 = 25H$
(B)	$R_1 = 25H,\ \ R_2 = 30H,\ \ R_3 = 40H$
(C)	$R_1 = 30H,\ \ R_2 = 40H,\ \ R_3 = 25H$
(D)	$R_1 = 40H,\ \ R_2 = 25H,\ \ R_3 = 30H$

Q.33	**The electrical system shown in the figure converts input source current $i_s(t)$ to output voltage $v_o(t)$.** 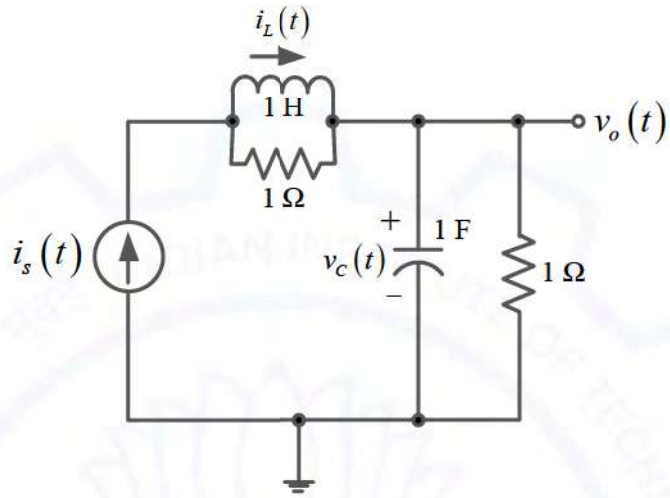 **Current $i_L(t)$ in the inductor and voltage $v_C(t)$ across the capacitor are taken as the state variables, both assumed to be initially equal to zero, *i.e.*, $i_L(0)=0$ and $v_C(0)=0$. The system is**
(A)	completely state controllable as well as completely observable
(B)	completely state controllable but not observable
(C)	completely observable but not state controllable
(D)	neither state controllable nor observable

Q.34	**A digital transmission system uses a $(7,4)$ systematic linear Hamming code for transmitting data over a noisy channel. If three of the message-codeword pairs in this code $(\mathbf{m}_i\,;\,\mathbf{c}_i)$, where $\mathbf{c}_i$ is the codeword corresponding to the ith message $\mathbf{m}_i$, are known to be $(1\,1\,0\,0\,;\,0\,1\,0\,1\,1\,0\,0)$, $(1\,1\,1\,0\,;\,0\,0\,1\,1\,1\,1\,0)$ and $(0\,1\,1\,0\,;\,1\,0\,0\,0\,1\,1\,0)$, then which of the following is a valid codeword in this code?**
(A)	1 1 0 1 0 0 1
(B)	1 0 1 1 0 1 0
(C)	0 0 0 1 0 1 1
(D)	0 1 1 0 1 0 0

Q.35	**The impedance matching network shown in the figure is to match a lossless line having characteristic impedance $Z_0 = 50\,\Omega$ with a load impedance Z_L. A quarter-wave line having a characteristic impedance $Z_1 = 75\,\Omega$ is connected to Z_L. Two stubs having characteristic impedance of $75\,\Omega$ each are connected to this quarter-wave line. One is a short-circuited (S.C.) stub of length 0.25λ connected across PQ and the other one is an open-circuited (O.C.) stub of length 0.5λ connected across RS.** 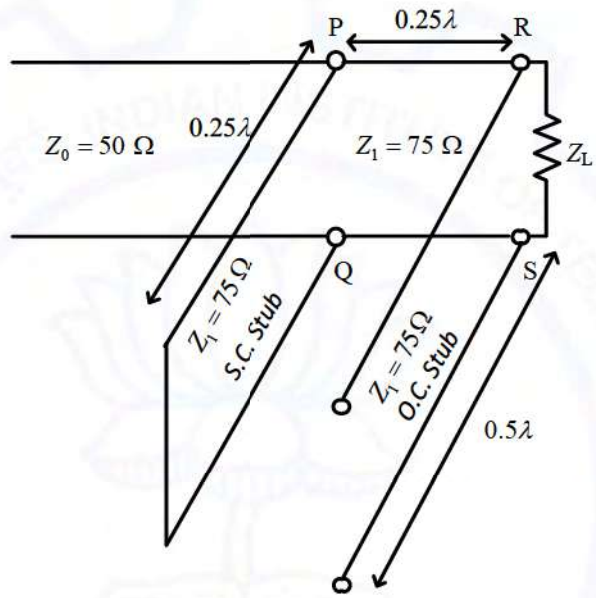 **The impedance matching is achieved when the real part of Z_L is**
(A)	112.5 Ω
(B)	75.0 Ω
(C)	50.0 Ω
(D)	33.3 Ω

Q.36 – Q.55 Numerical Answer Type (NAT), carry TWO mark each (no negative marks).

Q.36	**A real 2×2 non-singular matrix A with repeated eigenvalue is given as** $$\mathbf{A} = \begin{bmatrix} x & -3.0 \\ 3.0 & 4.0 \end{bmatrix}$$ **where x is a real positive number. The value of x (*rounded off to one decimal place*) is _____**

Q.37	**For a vector field $\mathbf{D} = \rho \cos^2 \varphi \, \mathbf{a}_\rho + z^2 \sin^2 \varphi \, \mathbf{a}_\varphi$ in a cylindrical coordinate system (ρ, φ, z) with unit vectors $\mathbf{a}_\rho, \mathbf{a}_\varphi$ and $\mathbf{a}_z$, the net flux of D leaving the closed surface of the cylinder ($\rho = 3$, $0 \le z \le 2$) (*rounded off to two decimal places*) is _____**

Q.38	**In the circuit shown in the figure, the switch is closed at time $t = 0$, while the capacitor is initially charged to -5 V (*i.e.*, $v_c(0) = -5$ V).** 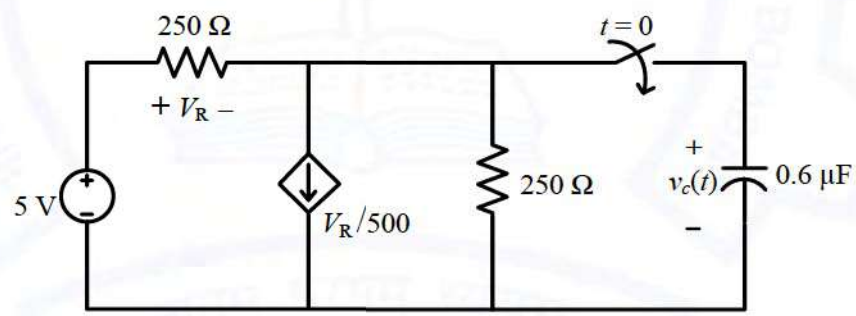 **The time after which the voltage across the capacitor becomes zero (*rounded off to three decimal places*) is _____ ms.**

Q.39	**The exponential Fourier series representation of a continuous-time periodic signal $x(t)$ is defined as** $$x(t) = \sum_{k=-\infty}^{\infty} a_k e^{jk\omega_0 t}$$ **where ω_0 is the fundamental angular frequency of $x(t)$ and the coefficients of the series are a_k. The following information is given about $x(t)$ and a_k.** I. **$x(t)$ is real and even, having a fundamental period of 6** II. **The average value of $x(t)$ is 2** III. $a_k = \begin{cases} k, & 1 \le k \le 3 \\ 0, & k > 3 \end{cases}$ **The average power of the signal $x(t)$ (*rounded off to one decimal place*) is _____**

Q.40	**For a unit step input $u[n]$, a discrete-time LTI system produces an output signal ($2\delta[n+1] + \delta[n] + \delta[n-1]$). Let $y[n]$ be the output of the system for an input $\left(\left(\frac{1}{2}\right)^n u[n]\right)$. The value of $y[0]$ is _____**

Q.41	**Consider the signals $x[n] = 2^{n-1}\, u[-n+2]$ and $y[n] = 2^{-n+2}\, u[n+1]$, where $u[n]$ is the unit step sequence. Let $X(e^{j\omega})$ and $Y(e^{j\omega})$ be the discrete-time Fourier transform of $x[n]$ and $y[n]$, respectively. The value of the integral** $$\frac{1}{2\pi}\int_0^{2\pi} X(e^{j\omega})\, Y(e^{-j\omega})\, d\omega$$ **(*rounded off to one decimal place*) is _____**

Q.42 **A silicon P-N junction is shown in the figure. The doping in the P region is 5×10^{16} cm^{-3} and doping in the N region is 10×10^{16} cm^{-3}. The parameters given are**

Built-in voltage (Φ_{bi}) = 0.8 V
Electron charge (q) = 1.6×10^{-19} C
Vacuum permittivity (ε_0) = 8.85×10^{-12} F/m
Relative permittivity of silicon (ε_{Si}) = 12

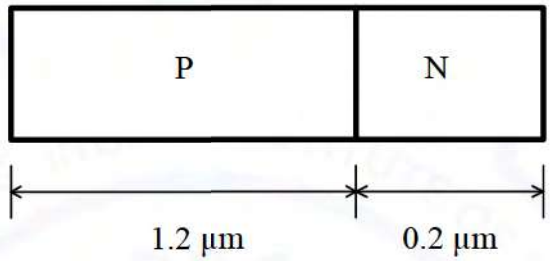

The magnitude of reverse bias voltage that would completely deplete one of the two regions (P or N) prior to the other (*rounded off to one decimal place*) is _____ V.

Q.43 **An asymmetrical periodic pulse train v_{in} of 10 V amplitude with on-time T_{ON} = 1 ms and off-time T_{OFF} = 1 μs is applied to the circuit shown in the figure. The diode D_1 is ideal.**

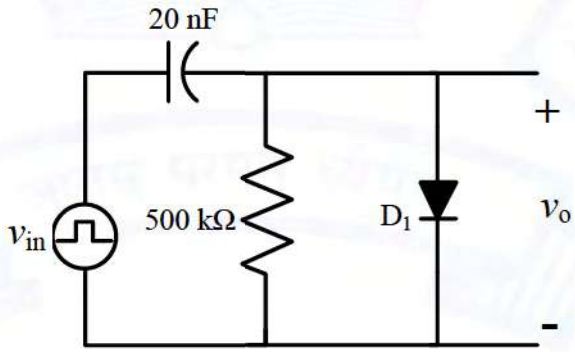

The difference between the maximum voltage and minimum voltage of the output waveform v_o (*in integer*) is _____ V.

Q.44 **For the transistor M_1 in the circuit shown in the figure, $\mu_n C_{ox} = 100\ \mu A/V^2$ and $(W/L) = 10$, where μ_n is the mobility of electron, C_{ox} is the oxide capacitance per unit area, W is the width and L is the length.**

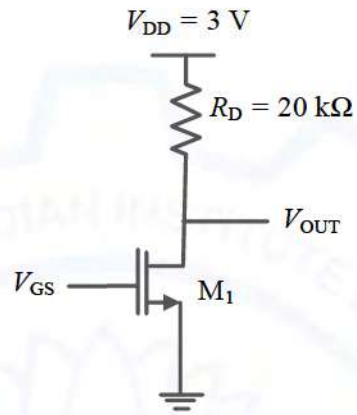

The channel length modulation coefficient is ignored. If the gate-to-source voltage V_{GS} is 1 V to keep the transistor at the edge of saturation, then the threshold voltage of the transistor (*rounded off to one decimal place*) is _____ V.

Q.45 **A circuit with an ideal OPAMP is shown in the figure. A pulse V_{IN} of 20 ms duration is applied to the input. The capacitors are initially uncharged.**

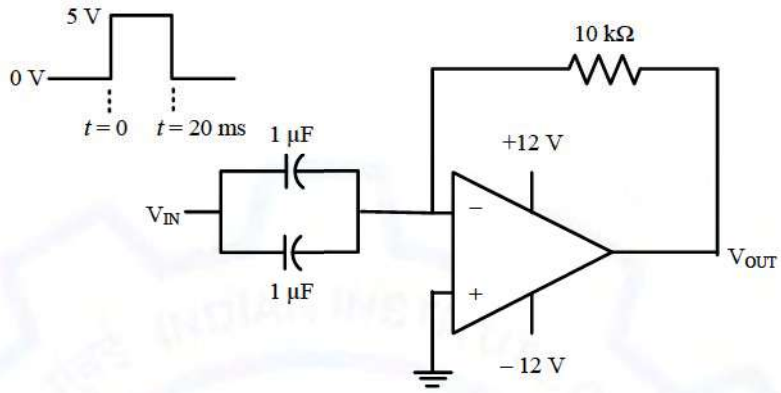

The output voltage V_{OUT} of this circuit at $t = 0^+$ (*in integer*) is _____ V.

Q.46 **The propagation delay of the exclusive-OR (XOR) gate in the circuit in the figure is 3 ns. The propagation delay of all the flip-flops is assumed to be zero. The clock (Clk) frequency provided to the circuit is 500 MHz.**

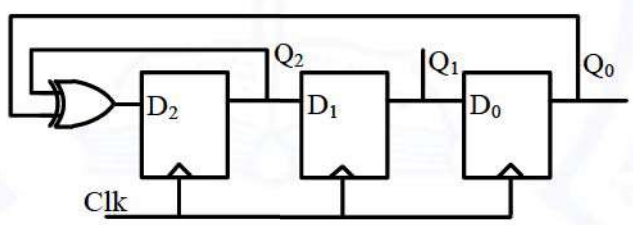

Starting from the initial value of the flip-flop outputs $Q_2Q_1Q_0 = 1\ 1\ 1$ with $D_2 = 1$, the minimum number of triggering clock edges after which the flip-flop outputs $Q_2Q_1Q_0$ becomes 1 0 0 (*in integer*) is _____

Q.47 **The circuit in the figure contains a current source driving a load having an inductor and a resistor in series, with a shunt capacitor across the load. The ammeter is assumed to have zero resistance. The switch is closed at time $t = 0$.**

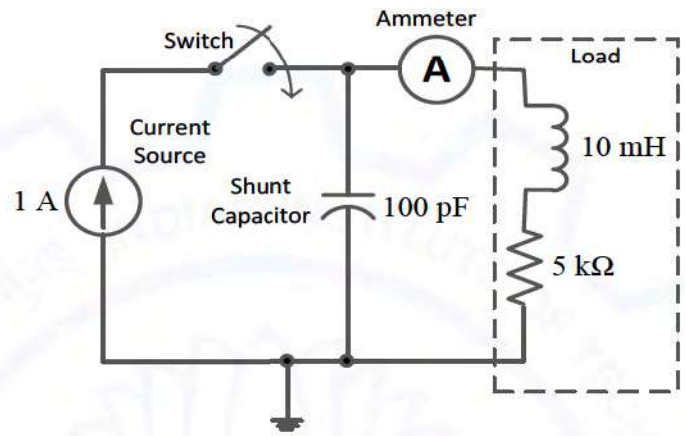

Initially, when the switch is open, the capacitor is discharged and the ammeter reads zero ampere. After the switch is closed, the ammeter reading keeps fluctuating for some time till it settles to a final steady value. The maximum ammeter reading that one will observe after the switch is closed (*rounded off to two decimal places*) is _____ A.

Q.48 **A unity feedback system that uses proportional-integral (PI) control is shown in the figure.**

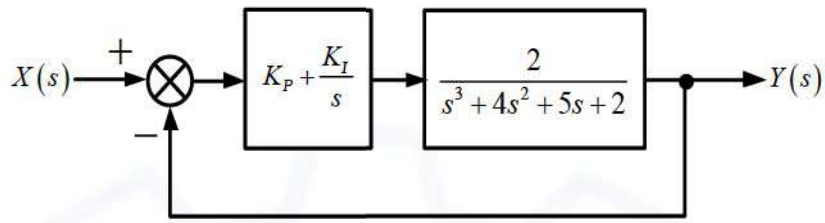

The stability of the overall system is controlled by tuning the PI control parameters K_P and K_I. The maximum value of K_I that can be chosen so as to keep the overall system stable or, in the worst case, marginally stable (*rounded off to three decimal places*) is _____

Q.49 **A sinusoidal message signal having root mean square value of 4 V and frequency of 1 kHz is fed to a phase modulator with phase deviation constant 2 rad/volt. If the carrier signal is $c(t) = 2\cos(2\pi 10^6 t)$, the maximum instantaneous frequency of the phase modulated signal (*rounded off to one decimal place*) is _____ Hz.**

Q.50 **Consider a superheterodyne receiver tuned to 600 kHz. If the local oscillator feeds a 1000 kHz signal to the mixer, the image frequency (*in integer*) is _____ kHz.**

Q.51 **In a high school having equal number of boy students and girl students, 75% of the students study Science and the remaining 25% students study Commerce. Commerce students are two times more likely to be a boy than are Science students. The amount of information gained in knowing that a randomly selected girl student studies Commerce (*rounded off to three decimal places*) is _____ bits.**

Q.52	**A message signal having peak-to-peak value of 2 V, root mean square value of 0.1 V and bandwidth of 5 kHz is sampled and fed to a pulse code modulation (PCM) system that uses a uniform quantizer. The PCM output is transmitted over a channel that can support a maximum transmission rate of 50 kbps. Assuming that the quantization error is uniformly distributed, the maximum signal to quantization noise ratio that can be obtained by the PCM system (*rounded off to two decimal places*) is _____**

Q.53	**Consider a polar non-return to zero (NRZ) waveform, using $+2$ V and -2 V for representing binary '1' and '0' respectively, is transmitted in the presence of additive zero-mean white Gaussian noise with variance 0.4 V^2. If the *a priori* probability of transmission of a binary '1' is 0.4, the optimum threshold voltage for a maximum *a posteriori* (MAP) receiver (*rounded off to two decimal places*) is _____ V.**

Q.54	**A standard air-filled rectangular waveguide with dimensions $a = 8$ cm, $b = 4$ cm, operates at 3.4 GHz. For the dominant mode of wave propagation, the phase velocity of the signal is v_p. The value (*rounded off to two decimal places*) of v_p/c, where c denotes the velocity of light, is _____**

Q.55	**An antenna with a directive gain of 6 dB is radiating a total power of 16 kW. The amplitude of the electric field in free space at a distance of 8 km from the antenna in the direction of 6 dB gain (*rounded off to three decimal places*) is _____ V/m.**

END OF THE QUESTION PAPER

Graduate Aptitude Test in Engineering (GATE 2021)

Subject/Paper: Electronics and Communication Engineering (EC)

Q. No.	Session	Question Type MCQ/MSQ/NAT	Section Name	Answer Key/Range	Marks	Negative Marks
1	4	MCQ	GA	C	1	1/3
2	4	MCQ	GA	B	1	1/3
3	4	MCQ	GA	C	1	1/3
4	4	MCQ	GA	C	1	1/3
5	4	MCQ	GA	B	1	1/3
6	4	MCQ	GA	C	2	2/3
7	4	MCQ	GA	D	2	2/3
8	4	MCQ	GA	A	2	2/3
9	4	MCQ	GA	C	2	2/3
10	4	MCQ	GA	A	2	2/3
1	4	MCQ	EC	A	1	1/3
2	4	MCQ	EC	B	1	1/3
3	4	MCQ	EC	B	1	1/3
4	4	MCQ	EC	B	1	1/3
5	4	MCQ	EC	C	1	1/3
6	4	MCQ	EC	D	1	1/3
7	4	MCQ	EC	A	1	1/3
8	4	MCQ	EC	D	1	1/3
9	4	MCQ	EC	MTA	1	1/3
10	4	MCQ	EC	A	1	1/3

GATE 2021 Answer Key for Electronics and Communication Engineering (EC)

Q. No.	Session	Question Type MCQ/MSQ/NAT	Section Name	Answer Key/Range	Marks	Negative Marks
11	4	MCQ	EC	B	1	1/3
12	4	MCQ	EC	C	1	1/3
13	4	MCQ	EC	C	1	1/3
14	4	MCQ	EC	D	1	1/3
15	4	MCQ	EC	A	1	1/3
16	4	NAT	EC	8.0 to 8.0	1	0
17	4	NAT	EC	0 to 0	1	0
18	4	NAT	EC	0.5 to 0.5	1	0
19	4	NAT	EC	1.0 to 1.0	1	0
20	4	NAT	EC	4.5 to 4.5	1	0
21	4	NAT	EC	2.0 to 2.0	1	0
22	4	NAT	EC	94.2 to 94.6	1	0
23	4	NAT	EC	9.24 to 9.28	1	0
24	4	NAT	EC	2.80 to 3.20	1	0
25	4	NAT	EC	9.30 to 9.44	1	0
26	4	MCQ	EC	MTA	2	2/3
27	4	MCQ	EC	B	2	2/3
28	4	MCQ	EC	C	2	2/3
29	4	MCQ	EC	C	2	2/3
30	4	MCQ	EC	A	2	2/3
31	4	MCQ	EC	C	2	2/3
32	4	MCQ	EC	A	2	2/3
33	4	MCQ	EC	D	2	2/3

GATE 2021 Answer Key for Electronics and Communication Engineering (EC)

Q. No.	Session	Question Type MCQ/MSQ/NAT	Section Name	Answer Key/Range	Marks	Negative Marks
34	4	MCQ	EC	C	2	2/3
35	4	MCQ	EC	A	2	2/3
36	4	NAT	EC	10.0 to 10.0	2	0
37	4	NAT	EC	56.50 to 56.60	2	0
38	4	NAT	EC	0.132 to 0.146	2	0
39	4	NAT	EC	31.9 to 32.1	2	0
40	4	NAT	EC	0.0 to 0.0	2	0
41	4	NAT	EC	7.9 to 8.1	2	0
42	4	NAT	EC	8.1 to 8.4	2	0
43	4	NAT	EC	10 to 10	2	0
44	4	NAT	EC	0.5 to 0.5	2	0
45	4	NAT	EC	-12 to -12	2	0
46	4	NAT	EC	5 to 5	2	0
47	4	NAT	EC	1.40 to 1.50	2	0
48	4	NAT	EC	3.125 to 3.125	2	0
49	4	NAT	EC	1011310.0 to 1011320.0	2	0
50	4	NAT	EC	1400 to 1400	2	0
51	4	NAT	EC	3.320 to 3.325	2	0
52	4	NAT	EC	30.00 to 34.00	2	0
53	4	NAT	EC	0.03 to 0.05	2	0
54	4	NAT	EC	1.15 to 1.25	2	0
55	4	NAT	EC	0.224 to 0.264	2	0
MTA means Marks to All						