SESSION - 1

Graduate Aptitude Test in Engineering

Notations :

1.Options shown in green color and with ✔ icon are correct.

2.Options shown in red color and with ✖ icon are incorrect.

Question Paper Name: EE: ELECTRICAL ENGINEERING 7th Feb Shift1
Number of Questions: 65
Total Marks: 100.0

Wrong answer for MCQ will result in negative marks, (-1/3) for 1 mark Questions and (-2/3) for 2 marks Questions.

General Aptitude

Number of Questions: 10
Section Marks: 15.0

Q.1 to Q.5 carry 1 mark each & Q.6 to Q.10 carry 2 marks each.

Question Number : 1 Question Type : MCQ

Didn't you buy _____ when you went shopping?

(A) any paper (B) much paper (C) no paper (D) a few paper

Options :

1. ✔ A
2. ✖ B
3. ✖ C
4. ✖ D

Question Number : 2 Question Type : MCQ

Which of the following options is the closest in meaning to the sentence below?

She enjoyed herself immensely at the party.

(A) She had a terrible time at the party

(B) She had a horrible time at the party

(C) She had a terrific time at the party

(D) She had a terrifying time at the party

Options :

1. ✖ A
2. ✖ B
3. ✔ C
4. ✖ D

Question Number : 3 Question Type : MCQ

Which one of the following combinations is incorrect?

(A) Acquiescence - Submission
(B) Wheedle - Roundabout
(C) Flippancy - Lightness
(D) Profligate - Extravagant

Options :

1. ✖ A
2. ✔ B
3. ✖ C
4. ✖ D

Question Number : 4 Question Type : MCQ

Based on the given statements, select the most appropriate option to solve the given question.

If two floors in a certain building are 9 feet apart, how many steps are there in a set of stairs that extends from the first floor to the second floor of the building?

Statements:

(I) Each step is 3/4 foot high.
(II) Each step is 1 foot wide.

(A) Statement I alone is sufficient, but statement II alone is not sufficient.
(B) Statement II alone is sufficient, but statement I alone is not sufficient.
(C) Both statements together are sufficient, but neither statement alone is sufficient.
(D) Statement I and II together are not sufficient.

Options :

1. ✔ A
2. ✖ B
3. ✖ C
4. ✖ D

Question Number : 5 Question Type : MCQ

Given Set A = {2, 3, 4, 5} and Set B = {11, 12, 13, 14, 15}, two numbers are randomly selected, one from each set. What is the probability that the sum of the two numbers equals 16?

(A) 0.20 (B) 0.25 (C) 0.30 (D) 0.33

Options :

1. ✔ A
2. ✖ B
3. ✖ C
4. ✖ D

Question Number : 6 Question Type : MCQ

Select the alternative meaning of the underlined part of the sentence.

The chain snatchers <u>took to their heels</u> when the police party arrived.

(A) took shelter in a thick jungle
(B) open indiscriminate fire
(C) took to flight
(D) unconditionally surrendered

Options :

1. ✖ A
2. ✖ B
3. ✔ C
4. ✖ D

Question Number : 7 Question Type : MCQ

The given statement is followed by some courses of action. Assuming the statement to be true, decide the correct option.

Statement:

There has been a significant drop in the water level in the lakes supplying water to the city.

Course of action:

(I) The water supply authority should impose a partial cut in supply to tackle the situation.
(II) The government should appeal to all the residents through mass media for minimal use of water.
(III) The government should ban the water supply in lower areas.

(A) Statements I and II follow.
(B) Statements I and III follow.
(C) Statements II and III follow.
(D) All statements follow.

Options :

1. ✔ A
2. ✖ B
3. ✖ C
4. ✖ D

Question Number : 8 Question Type : NAT

The pie chart below has the breakup of the number of students from different departments in an engineering college for the year 2012. The proportion of male to female students in each department is 5:4. There are 40 males in Electrical Engineering. What is the difference between the numbers of female students in the Civil department and the female students in the Mechanical department?

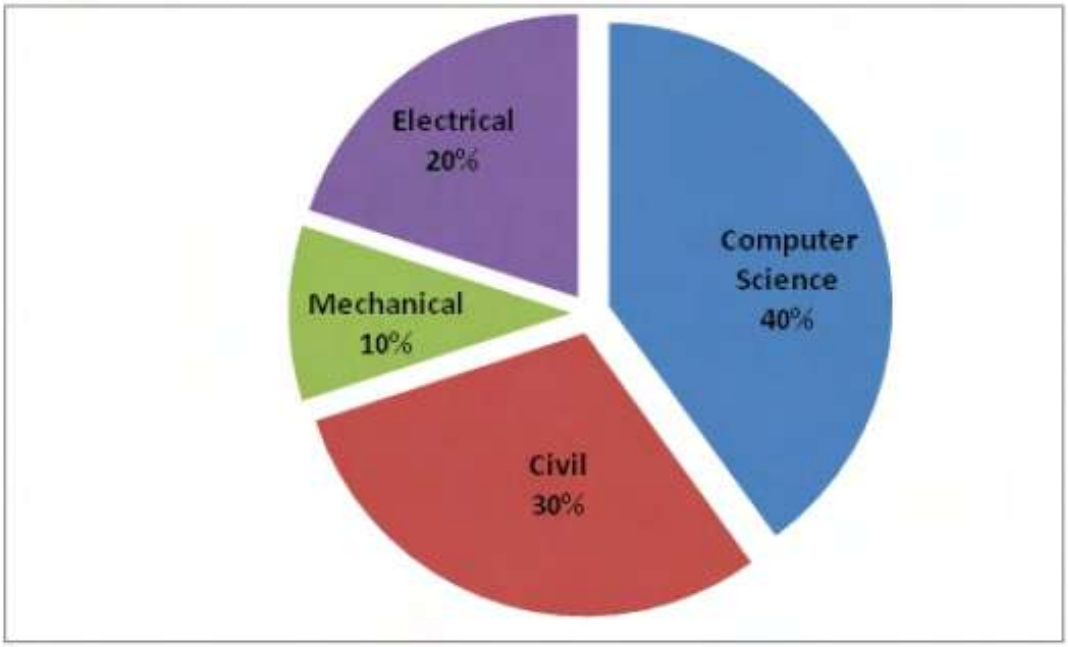

Correct Answer :

32

Question Number : 9 Question Type : MCQ

The probabilities that a student passes in Mathematics, Physics and Chemistry are m, p, and c respectively. Of these subjects, the student has 75% chance of passing in at least one, a 50% chance of passing in at least two and a 40% chance of passing in exactly two. Following relations are drawn in m, p, c:

(I) $p + m + c = 27/20$
(II) $p + m + c = 13/20$
(III) $(p)\times(m)\times(c) = 1/10$

(A) Only relation I is true.
(B) Only relation II is true.
(C) Relations II and III are true.
(D) Relations I and III are true.

Options :

1. ✖ A
2. ✖ B
3. ✖ C
4. ✔ D

Question Number : 10 Question Type : MCQ

The number of students in a class who have answered correctly, wrongly, or not attempted each question in an exam, are listed in the table below. The marks for each question are also listed. There is no negative or partial marking.

Q No.	Marks	Answered Correctly	Answered Wrongly	Not Attempted
1	2	21	17	6
2	3	15	27	2
3	1	11	29	4
4	2	23	18	3
5	5	31	12	1

What is the average of the marks obtained by the class in the examination?

(A) 2.290 (B) 2.970 (C) 6.795 (D) 8.795

Options :

1. ✖ A
2. ✖ B
3. ✔ C
4. ✖ D

Electrical Engineering

Number of Questions:	55
Section Marks:	85.0

Q.11 to Q.35 carry 1 mark each & Q.36 to Q.65 carry 2 marks each.

Question Number : 11 Question Type : NAT

A random variable X has probability density function $f(x)$ as given below:

$$f(x) = \begin{cases} a + bx & for\ 0 < x < 1 \\ 0 & \text{otherwise} \end{cases}$$

If the expected value $E[X] = 2/3$, then $Pr[X < 0.5]$ is _____.

Correct Answer:

0.25

Question Number : 12 Question Type : MCQ

If a continuous function $f(x)$ does not have a root in the interval $[a, b]$, then which one of the following statements is TRUE?

(A) $f(a) \cdot f(b) = 0$
(B) $f(a) \cdot f(b) < 0$
(C) $f(a) \cdot f(b) > 0$
(D) $f(a)/f(b) \leq 0$

Options :

1. ✖ A
2. ✖ B
3. ✔ C
4. ✖ D

Question Number : 13 Question Type : NAT

If the sum of the diagonal elements of a 2×2 matrix is -6, then the maximum possible value of determinant of the matrix is _____.

Correct Answer :

9

Question Number : 14 Question Type : MCQ

Consider a function $\vec{f} = \frac{1}{r^2}\hat{r}$, where r is the distance from the origin and $\hat{r}$ is the unit vector in the radial direction. The divergence of this function over a sphere of radius R, which includes the origin, is

(A) 0 (B) 2π (C) 4π (D) $R\pi$

Options :

1. ✖ A
2. ✖ B
3. ✔ C
4. ✖ D

Question Number : 15 Question Type : MCQ

When the Wheatstone bridge shown in the figure is used to find the value of resistor R_X, the galvanometer G indicates zero current when $R_1 = 50\ \Omega$, $R_2 = 65\ \Omega$ and $R_3 = 100\ \Omega$. If R_3 is known with $\pm 5\%$ tolerance on its nominal value of $100\ \Omega$, what is the range of R_X in Ohms?

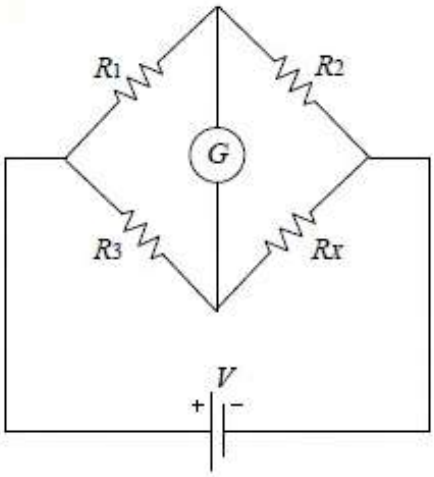

(A) [123.50, 136.50]
(B) [125.89, 134.12]
(C) [117.00, 143.00]
(D) [120.25, 139.75]

Options :

1. ✔ A
2. ✖ B
3. ✖ C
4. ✖ D

Question Number : 16 Question Type : NAT

A (0-50 A) moving coil ammeter has a voltage drop of 0.1 V across its terminals at full scale deflection. The external shunt resistance (in milliohms) needed to extend its range to (0 – 500 A) is _____.

Correct Answer :

0.22 to 0.23

Question Number : 17 Question Type : MCQ

Of the four characteristics given below, which are the major requirements for an instrumentation amplifier?

P. High common mode rejection ratio
Q. High input impedance
R. High linearity
S. High output impedance

(A) P, Q and R only
(B) P and R only
(C) P, Q and S only
(D) Q, R and S only

Options :

1. ✔ A
2. ✖ B
3. ✖ C
4. ✖ D

Question Number : 18 Question Type : NAT

In the following chopper, the duty ratio of switch S is 0.4. If the inductor and capacitor are sufficiently large to ensure continuous inductor current and ripple free capacitor voltage, the charging current (in Ampere) of the 5 V battery, under steady-state, is_____.

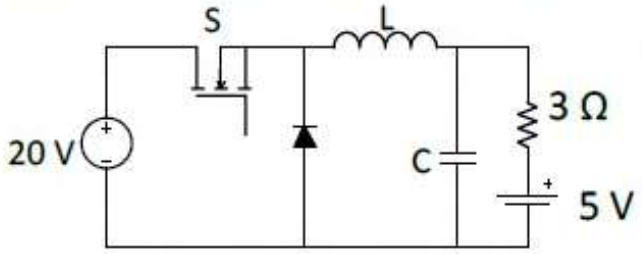

Correct Answer :

1

Question Number : 19 Question Type : NAT

A moving average function is given by $y(t) = \frac{1}{T}\int_{t-T}^{t} u(\tau)d\tau$. If the input u is a sinusoidal signal of frequency $\frac{1}{2T}$ Hz, then in steady state, the output y will lag u (in degree) by _____.

Correct Answer :

90

Question Number : 20 Question Type : MCQ

The impulse response g(t) of a system, G, is as shown in Figure (a). What is the maximum value attained by the impulse response of two cascaded blocks of G as shown in Figure (b)?

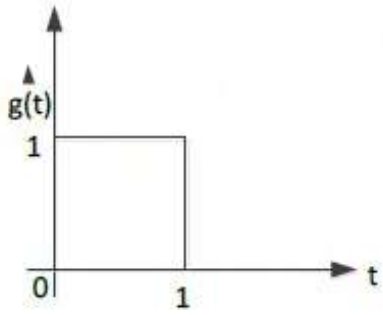

(a)

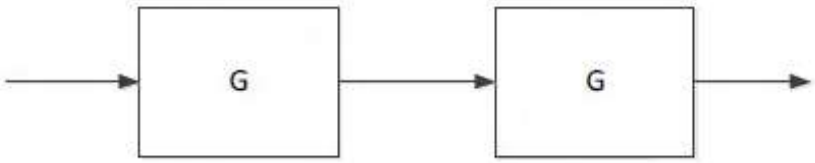

(b)

(A) $\frac{2}{3}$ (B) $\frac{3}{4}$ (C) $\frac{4}{5}$ (D) 1

Options :

1. ✖ A
2. ✖ B
3. ✖ C
4. ✔ D

Question Number : 21 Question Type : NAT

Consider a one-turn rectangular loop of wire placed in a uniform magnetic field as shown in the figure. The plane of the loop is perpendicular to the field lines. The resistance of the loop is 0.4Ω, and its inductance is negligible. The magnetic flux density (in Tesla) is a function of time, and is given by $B(t) = 0.25 \sin \omega t$, where $\omega = 2\pi \times 50$ radian/second. The power absorbed (in Watt) by the loop from the magnetic field is _____.

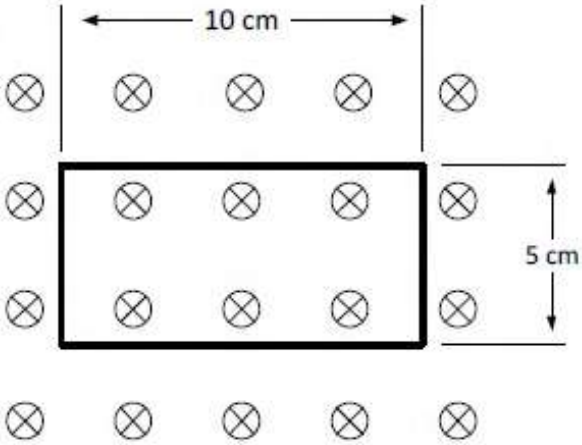

Correct Answer :

0.17 to 0.2

Question Number : 22 Question Type : MCQ

A steady current I is flowing in the $-x$ direction through each of two infinitely long wires at $y = \pm\frac{L}{2}$ as shown in the figure. The permeability of the medium is μ_0. The $\vec{B}$-field at (0,L,0) is

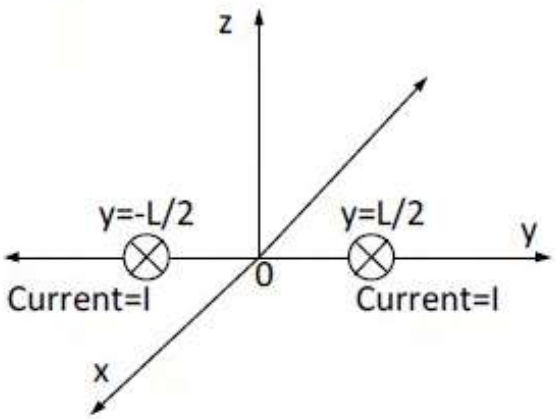

(A) $-\frac{4\mu_0 I}{3\pi L}\hat{z}$ (B) $+\frac{4\mu_0 I}{3\pi L}\hat{z}$ (C) 0 (D) $-\frac{3\mu_0 I}{4\pi L}\hat{z}$

Options :

1. ✔ A
2. ✖ B
3. ✖ C
4. ✖ D

Question Number : 23 Question Type : MCQ

Consider the circuit shown in the figure. In this circuit R=1 kΩ, and C=1 μF. The input voltage is sinusoidal with a frequency of 50 Hz, represented as a phasor with magnitude V_i and phase angle 0 radian as shown in the figure. The output voltage is represented as a phasor with magnitude V_o and phase angle δ radian. What is the value of the output phase angle δ (in radian) relative to the phase angle of the input voltage?

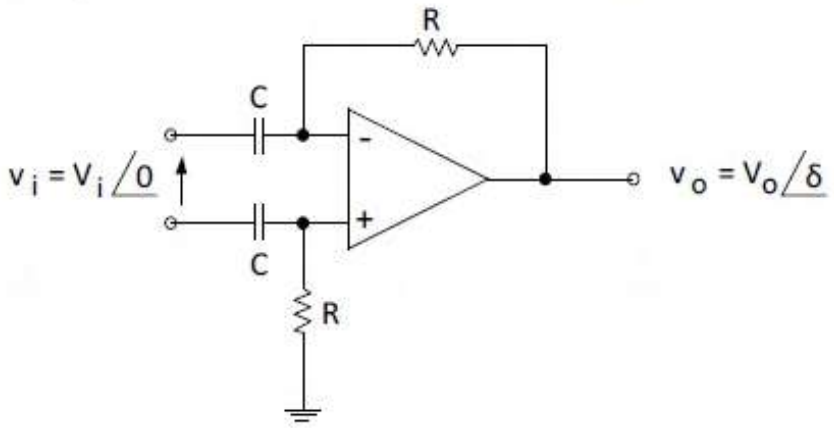

(A) 0 (B) π (C) $\pi/2$ (D) $-\pi/2$

Options :

1. ✖ A
2. ✖ B
3. ✖ C
4. ✔ D

Question Number : 24 Question Type : NAT

In the given circuit, the silicon transistor has $\beta = 75$ and a collector voltage $V_C = 9$ V. Then the ratio of R_B and R_C is _____.

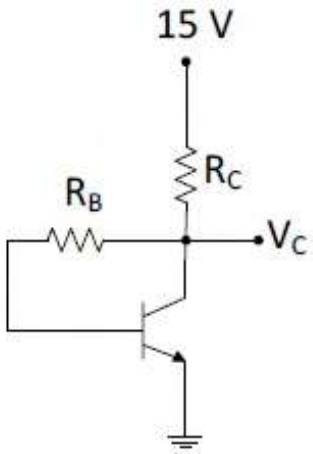

Correct Answer :

100 to 110

Question Number : 25 Question Type : MCQ

In the 4 × 1 multiplexer, the output F is given by F = A ⊕ B. Find the required input '$I_3 I_2 I_1 I_0$'.

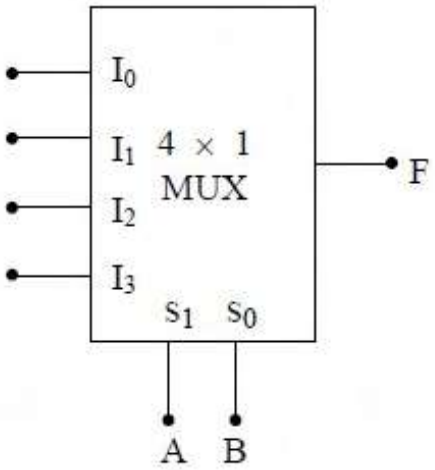

(A) 1010 (B) 0110 (C) 1000 (D) 1110

Options :

1. ✖ A
2. ✔ B
3. ✖ C
4. ✖ D

Question Number : 26 Question Type : MCQ

Consider a HVDC link which uses thyristor based line-commutated converters as shown in the figure. For a power flow of 750 MW from System 1 to System 2, the voltages at the two ends, and the current, are given by: $V_1 = 500$ kV, $V_2 = 485$ kV and $I = 1.5$ kA. If the direction of power flow is to be reversed (that is, from System 2 to System 1) without changing the electrical connections, then which one of the following combinations is feasible?

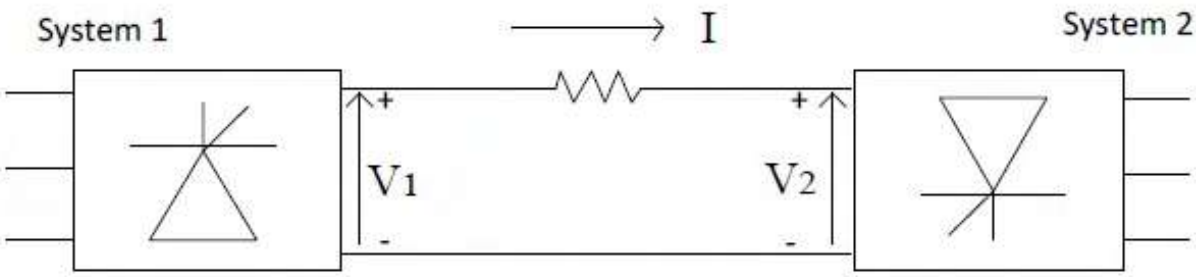

(A) $V_1 = -500$ kV, $V_2 = -485$ kV and $I = 1.5$ kA
(B) $V_1 = -485$ kV, $V_2 = -500$ kV and $I = 1.5$ kA
(C) $V_1 = 500$ kV, $V_2 = 485$ kV and $I = -1.5$ kA
(D) $V_1 = -500$ kV, $V_2 = -485$ kV and $I = -1.5$ kA

Options :

1. ✖ A
2. ✔ B
3. ✖ C
4. ✖ D

Question Number : 27 Question Type : MCQ

Base load power plants are

P: wind farms.
Q: run-of-river plants.
R: nuclear power plants.
S: diesel power plants.

(A) P, Q and S only
(B) P, R and S only
(C) P, Q and R only
(D) Q and R only

Options :

1. ✖ A
2. ✖ B
3. ✔ C
4. ✖ D

Question Number : 28 Question Type : MCQ

The voltages developed across the 3 Ω and 2 Ω resistors shown in the figure are 6 V and 2 V respectively, with the polarity as marked. What is the power (in Watt) delivered by the 5 V voltage source?

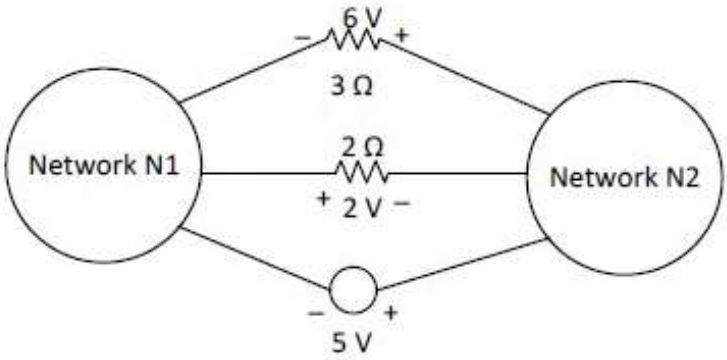

(A) 5 (B) 7 (C) 10 (D) 14

Options :

1. ✔ A
2. ✖ B
3. ✖ C
4. ✖ D

Question Number : 29 Question Type : NAT

For the given circuit, the Thevenin equivalent is to be determined. The Thevenin voltage, V_{Th} (in Volt), seen from terminal AB is _____.

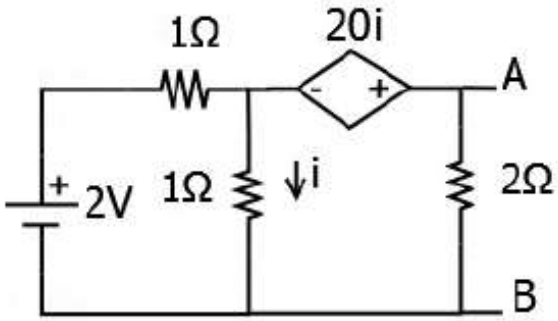

Correct Answer :

3.3 to 3.4

Question Number : 30 Question Type : MCQ

An inductor is connected in parallel with a capacitor as shown in the figure.

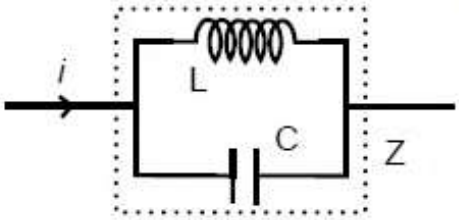

As the frequency of current i is increased, the impedance (Z) of the network varies as

(A)

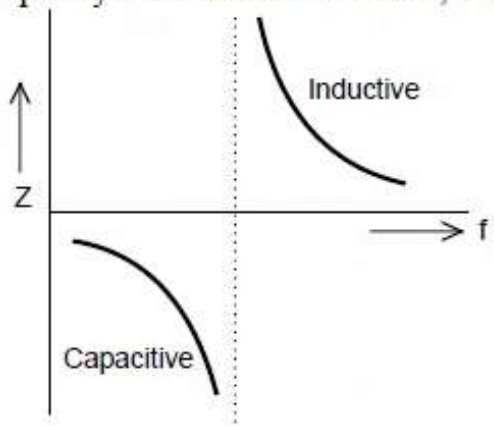

(B)

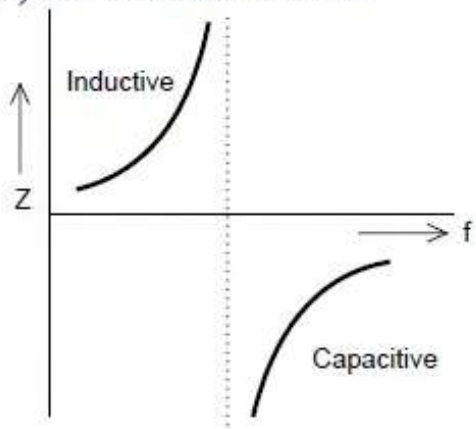

(C)

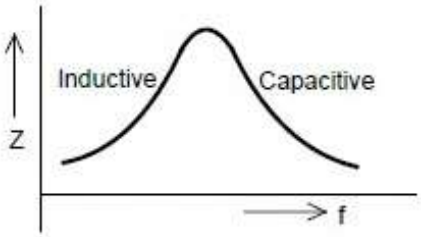

(D)

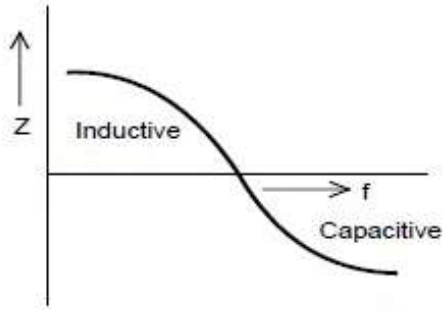

Options :

1. ✖ A
2. ✔ B
3. ✖ C
4. ✖ D

Question Number : 31 Question Type : MCQ

A separately excited DC generator has an armature resistance of 0.1Ω and negligible armature inductance. At rated field current and rated rotor speed, its open-circuit voltage is 200 V. When this generator is operated at half the rated speed, with half the rated field current, an un-charged 1000 μF capacitor is suddenly connected across the armature terminals. Assume that the speed remains unchanged during the transient. At what time (in microsecond) after the capacitor is connected will the voltage across it reach 25 V?

(A) 62.25 (B) 69.3 (C) 73.25 (D) 77.3

Options :

1. ✖ A
2. ✔ B
3. ✖ C
4. ✖ D

Question Number : 32 Question Type : MCQ

The self inductance of the primary winding of a single phase, 50 Hz, transformer is 800 mH, and that of the secondary winding is 600 mH. The mutual inductance between these two windings is 480 mH. The secondary winding of this transformer is short circuited and the primary winding is connected to a 50 Hz, single phase, sinusoidal voltage source. The current flowing in both the windings is less than their respective rated currents. The resistance of both windings can be neglected. In this condition, what is the effective inductance (in mH) seen by the source?

(A) 416 (B) 440 (C) 200 (D) 920

Options :

1. ✔ A
2. ✖ B
3. ✖ C
4. ✖ D

Question Number : 33 Question Type : MCQ

The primary mmf is least affected by the secondary terminal conditions in a

(A) power transformer.
(B) potential transformer.
(C) current transformer.
(D) distribution transformer.

Options :

1. ✖ A
2. ✖ B
3. ✔ C
4. ✖ D

Question Number : 34 Question Type : MCQ

A Bode magnitude plot for the transfer function $G(s)$ of a plant is shown in the figure. Which one of the following transfer functions best describes the plant?

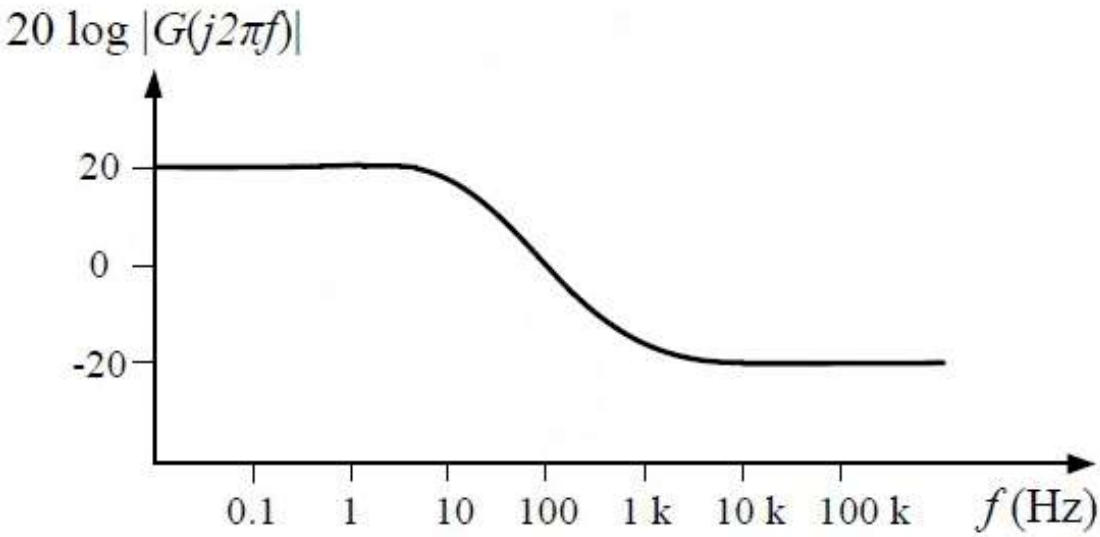

(A) $\frac{1000(s+10)}{s+1000}$ (B) $\frac{10(s+10)}{s(s+1000)}$ (C) $\frac{s+1000}{10s(s+10)}$ (D) $\frac{s+1000}{10(s+10)}$

Options :

1. ✖ A
2. ✖ B

3. ✖ C

4. ✔ D

Question Number : 35 Question Type : MCQ

For the signal-flow graph shown in the figure, which one of the following expressions is equal to the transfer function $\left.\frac{Y(s)}{X_2(s)}\right|_{X_1(s)=0}$?

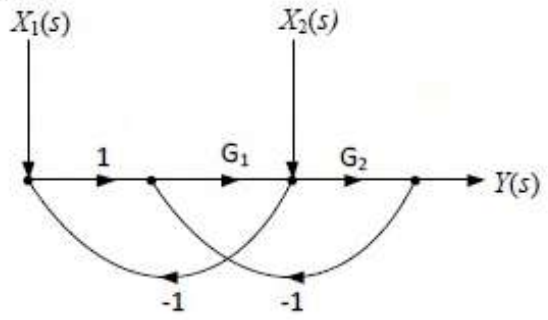

(A) $\frac{G_1}{1+G_2(1+G_1)}$ (B) $\frac{G_2}{1+G_1(1+G_2)}$ (C) $\frac{G_1}{1+G_1G_2}$ (D) $\frac{G_2}{1+G_1G_2}$

Options :

1. ✖ A

2. ✔ B

3. ✖ C

4. ✖ D

Question Number : 36 Question Type : MCQ

The maximum value of "a" such that the matrix $\begin{pmatrix} -3 & 0 & -2 \\ 1 & -1 & 0 \\ 0 & a & -2 \end{pmatrix}$ has three linearly independent real eigenvectors is

(A) $\frac{2}{3\sqrt{3}}$ (B) $\frac{1}{3\sqrt{3}}$ (C) $\frac{1+2\sqrt{3}}{3\sqrt{3}}$ (D) $\frac{1+\sqrt{3}}{3\sqrt{3}}$

Options :

1. ✖ A

2. ✔ B

3. ✖ C

4. ✖ D

Question Number : 37 Question Type : NAT

A solution of the ordinary differential equation $\frac{d^2y}{dt^2} + 5\frac{dy}{dt} + 6y = 0$ is such that $y(0) = 2$ and $y(1) = -\frac{1-3e}{e^3}$. The value of $\frac{dy}{dt}(0)$ is _____.

Correct Answer :

-3

Question Number : 38 Question Type : MCQ

The signum function is given by

$$sgn(x) = \begin{cases} \frac{x}{|x|}; x \neq 0 \\ 0; x = 0 \end{cases}$$

The Fourier series expansion of $sgn(\cos(t))$ has

(A) only sine terms with all harmonics.
(B) only cosine terms with all harmonics.
(C) only sine terms with even numbered harmonics.
(D) only cosine terms with odd numbered harmonics.

Options :

1. ✖ A
2. ✖ B
3. ✖ C
4. ✔ D

Question Number : 39 Question Type : MCQ

Two players, A and B, alternately keep rolling a fair dice. The person to get a six first wins the game. Given that player A starts the game, the probability that A wins the game is

(A) 5/11 (B) 1/2 (C) 7/13 (D) 6/11

Options :

1. ✖ A
2. ✖ B
3. ✖ C
4. ✔ D

Question Number : 40 Question Type : MCQ

An unbalanced DC Wheatstone bridge is shown in the figure. At what value of p will the magnitude of V_0 be maximum?

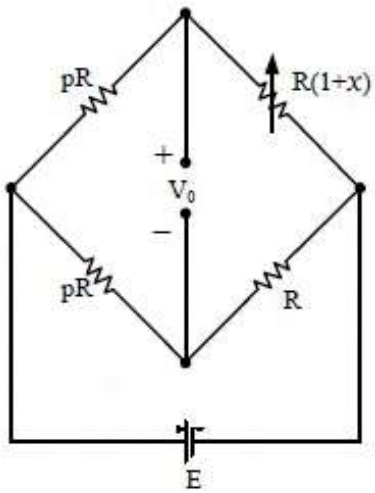

(A) $\sqrt{(1+x)}$ (B) $(1+x)$ (C) $1/\sqrt{(1+x)}$ (D) $\sqrt{(1-x)}$

Options :

1. ✔ A
2. ✖ B
3. ✖ C
4. ✖ D

Question Number : 41 Question Type : NAT

The circuit shown is meant to supply a resistive load R_L from two separate DC voltage sources. The switches S1 and S2 are controlled so that only one of them is ON at any instant. S1 is turned on for 0.2 ms and S2 is turned on for 0.3 ms in a 0.5 ms switching cycle time period. Assuming continuous conduction of the inductor current and negligible ripple on the capacitor voltage, the output voltage V_O (in Volt) across R_L is _____.

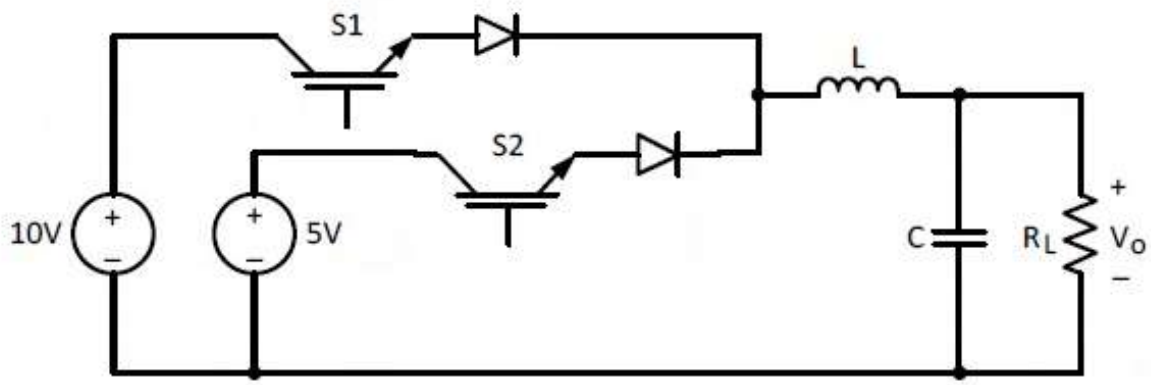

Correct Answer :

7

Question Number : 42 Question Type : MCQ

A self commutating switch SW, operated at duty cycle δ is used to control the load voltage as shown in the figure

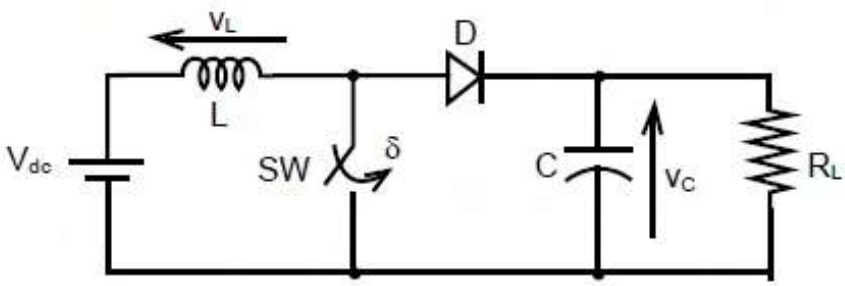

Under steady state operating conditions, the average voltage across the inductor and the capacitor respectively, are

(A) $V_L = 0$ and $V_C = \frac{1}{1-\delta} V_{dc}$

(B) $V_L = \frac{\delta}{2} V_{dc}$ and $V_C = \frac{1}{1-\delta} V_{dc}$

(C) $V_L = 0$ and $V_C = \frac{\delta}{1-\delta} V_{dc}$

(D) $V_L = \frac{\delta}{2} V_{dc}$ and $V_C = \frac{\delta}{1-\delta} V_{dc}$

Options :

1. ✔ A
2. ✖ B

3. ✖ C

4. ✖ D

Question Number : 43 Question Type : NAT

The single-phase full-bridge voltage source inverter (VSI), shown in figure, has an output frequency of 50 Hz. It uses unipolar pulse width modulation with switching frequency of 50 kHz and modulation index of 0.7. For $V_{in} = 100$ V DC, $L = 9.55$ mH, $C = 63.66$ μF, and $R = 5\ \Omega$, the amplitude of the fundamental component in the output voltage V_o (in Volt) under steady-state is _____.

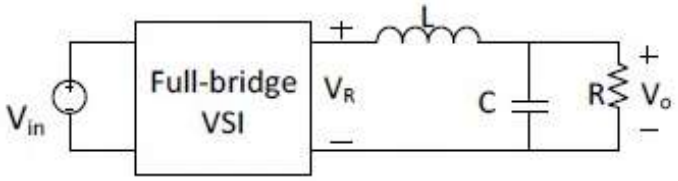

Correct Answer :

60 to 64

Question Number : 44 Question Type : NAT

A 3-phase 50 Hz square wave (6-step) VSI feeds a 3-phase, 4 pole induction motor. The VSI line voltage has a dominant 5th harmonic component. If the operating slip of the motor with respect to fundamental component voltage is 0.04, the slip of the motor with respect to 5th harmonic component of voltage is _____.

Correct Answer :

1.16 to 1.22

Question Number : 45 Question Type : MCQ

Consider a discrete time signal given by

$$x[n] = (-0.25)^n\, u[n] + (0.5)^n\, u[-n-1]$$

The region of convergence of its Z-transform would be

(A) the region inside the circle of radius 0.5 and centered at origin
(B) the region outside the circle of radius 0.25 and centered at origin
(C) the annular region between the two circles, both centered at origin and having radii 0.25 and 0.5
(D) the entire Z plane.

Options :

1. ✖ A

2. ✖ B

3. ✔ C

4. ✖ D

Question Number : 46 Question Type : NAT

A parallel plate capacitor is partially filled with glass of dielectric constant 4.0 as shown below. The dielectric strengths of air and glass are 30 kV/cm and 300 kV/cm, respectively. The maximum voltage (in kilovolts), which can be applied across the capacitor without any breakdown, is _____.

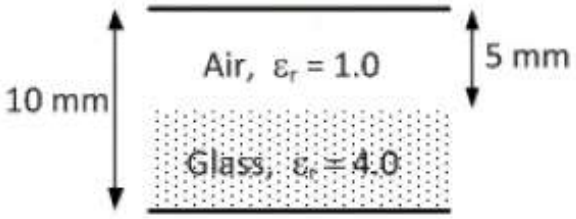

Correct Answer :

17 to 20

Question Number : 47 Question Type : NAT

The figure shows a digital circuit constructed using negative edge triggered J-K flip flops. Assume a starting state of $Q_2Q_1Q_0$=000. This state $Q_2Q_1Q_0$=000 will repeat after _____ number of cycles of the clock CLK.

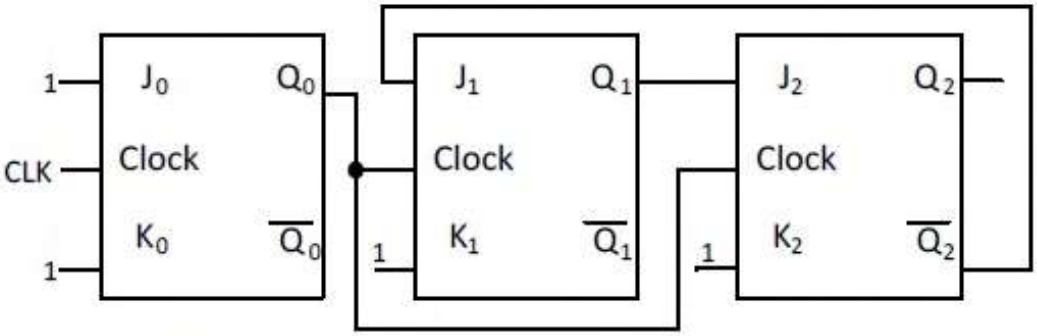

Correct Answer:

6

Question Number : 48 Question Type : MCQ

$f(A,B,C,D) = \Pi M(0,1,3,4,5,7,9,11,12,13,14,15)$ is a maxterm representation of a Boolean function $f(A,B,C,D)$ where A is the MSB and D is the LSB. The equivalent minimized representation of this function is

(A) $(A+\bar{C}+D)(\bar{A}+B+D)$
(B) $A\bar{C}D+\bar{A}BD$
(C) $\bar{A}C\bar{D}+A\bar{B}C\bar{D}+A\bar{B}\bar{C}\bar{D}$
(D) $(B+\bar{C}+D)(A+\bar{B}+\bar{C}+D)(\bar{A}+B+C+D)$

Options :

1. ✔ A
2. ✖ B
3. ✖ C
4. ✖ D

Question Number : 49 Question Type : MCQ

The op-amp shown in the figure has a finite gain A = 1000 and an infinite input resistance. A step-voltage $V_i = 1\ mV$ is applied at the input at time t = 0 as shown. Assuming that the operational amplifier is not saturated, the time constant (in millisecond) of the output voltage V_O is

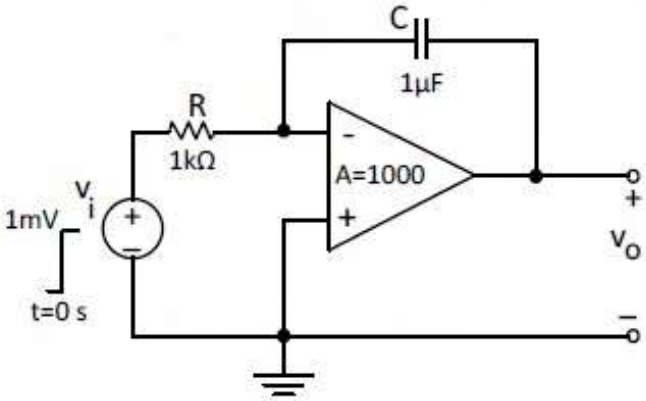

(A) 1001
(B) 101
(C) 11
(D) 1

Options :

1. ✔ A
2. ✖ B
3. ✖ C
4. ✖ D

Question Number : 50 Question Type : MCQ

An 8-bit, unipolar Successive Approximation Register type ADC is used to convert 3.5 V to digital equivalent output. The reference voltage is +5 V. The output of the ADC, at the end of 3rd clock pulse after the start of conversion, is

(A) 1010 0000
(B) 1000 0000
(C) 0000 0001
(D) 0000 0011

Options :

1. ✔ A
2. ✖ B
3. ✖ C
4. ✖ D

Question Number : 51 Question Type : NAT

Consider the economic dispatch problem for a power plant having two generating units. The fuel costs in Rs/MWh along with the generation limits for the two units are given below:

$$C_1(P_1) = 0.01P_1^2 + 30P_1 + 10 \quad ; \quad 100\text{ MW} \le P_1 \le 150\text{ MW}$$
$$C_2(P_2) = 0.05P_2^2 + 10P_2 + 10 \quad ; \quad 100\text{ MW} \le P_2 \le 180\text{ MW}$$

The incremental cost (in Rs/MWh) of the power plant when it supplies 200 MW is _____ .

Correct Answer :
20

Question Number : 52 Question Type : MCQ

Determine the correctness or otherwise of the following Assertion [a] and the Reason [r].

Assertion: Fast decoupled load flow method gives approximate load flow solution because it uses several assumptions.

Reason: Accuracy depends on the power mismatch vector tolerance.

(A) Both [a] and [r] are true and [r] is the correct reason for [a].
(B) Both [a] and [r] are true but [r] is not the correct reason for [a].
(C) Both [a] and [r] are false.
(D) [a] is false and [r] is true.

Options :

1. ✖ A
2. ✖ B
3. ✖ C
4. ✔ D

Question Number : 53 Question Type : NAT

A 50 Hz generating unit has H-constant of 2 MJ/MVA. The machine is initially operating in steady state at synchronous speed, and producing 1 pu of real power. The initial value of the rotor angle δ is 5°, when a bolted three phase to ground short circuit fault occurs at the terminal of the generator. Assuming the input mechanical power to remain at 1 pu, the value of δ in degrees, 0.02 second after the fault is _____.

Correct Answer :
5.7 to 6.1

Question Number : 54 Question Type : MCQ

A sustained three-phase fault occurs in the power system shown in the figure. The current and voltage phasors during the fault (on a common reference), after the natural transients have died down, are also shown. Where is the fault located?

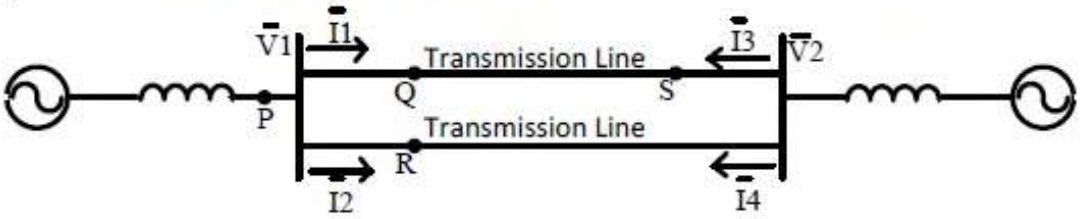

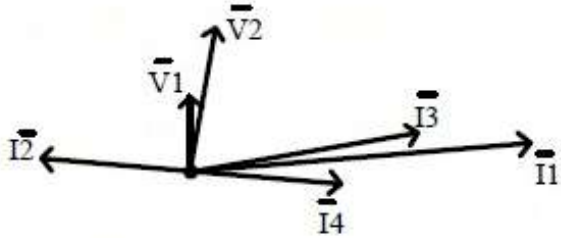

(A) Location P (B) Location Q (C) Location R (D) Location S

Options :

1. ✖ A
2. ✔ B
3. ✖ C
4. ✖ D

Question Number : 55 Question Type : NAT

The circuit shown in the figure has two sources connected in series. The instantaneous voltage of the AC source (in Volt) is given by $v(t) = 12 \sin t$. If the circuit is in steady state, then the rms value of the current (in Ampere) flowing in the circuit is _____ .

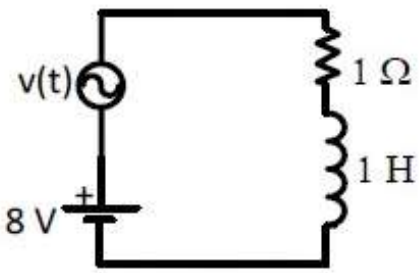

Correct Answer :

9.9 to 10.1

Question Number : 56 Question Type : NAT

In a linear two-port network, when 10 V is applied to Port 1, a current of 4 A flows through Port 2 when it is short-circuited. When 5 V is applied to Port 1, a current of 1.25 A flows through a 1 Ω resistance connected across Port 2. When 3 V is applied to Port 1, the current (in Ampere) through a 2 Ω resistance connected across Port 2 is _____.

Correct Answer:
0.4 to 0.6

Question Number : 57 Question Type : NAT

In the given circuit, the parameter k is positive, and the power dissipated in the 2 Ω resistor is 12.5W. The value of k is _____.

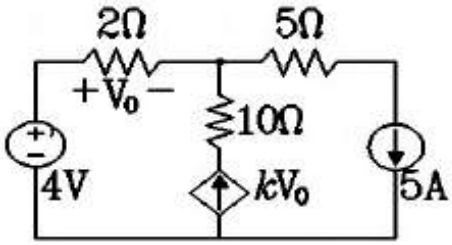

Correct Answer :
0.48 to 0.52

Question Number : 58 Question Type : NAT

A separately excited DC motor runs at 1000 rpm on no load when its armature terminals are connected to a 200V DC source and the rated voltage is applied to the field winding. The armature resistance of this motor is 1 Ω. The no-load armature current is negligible. With the motor developing its full load torque, the armature voltage is set so that the rotor speed is 500 rpm. When the load torque is reduced to 50% of the full load value under the same armature voltage conditions, the speed rises to 520 rpm. Neglecting the rotational losses, the full load armature current (in Ampere) is _____.

Correct Answer:
8

Question Number : 59 Question Type : NAT

A DC motor has the following specifications: 10 hp, 37.5 A, 230 V; flux/pole = 0.01 Wb, number of poles = 4, number of conductors = 666, number of parallel paths = 2. Armature resistance = 0.267 Ω. The armature reaction is negligible and rotational losses are 600 W. The motor operates from a 230 V DC supply. If the motor runs at 1000 rpm, the output torque produced (in Nm) is _____.

Correct Answer :
57 to 58

Question Number : 60 Question Type : NAT

A 200/400 V, 50 Hz, two-winding transformer is rated at 20 kVA. Its windings are connected as an auto-transformer of rating 200/600 V. A resistive load of 12 Ω is connected to the high voltage (600 V) side of the auto-transformer. The value of equivalent load resistance (in Ohm) as seen from low voltage side is _____.

Correct Answer :

1.3 to 1.4

Question Number : 61 Question Type : NAT

Two single-phase transformers T_1 and T_2 each rated at 500 kVA are operated in parallel. Percentage impedances of T_1 and T_2 are (1 + j6) and (0.8 + j4.8), respectively. To share a load of 1000 kVA at 0.8 lagging power factor, the contribution of T_2 (in kVA) is _____.

Correct Answer :

554 to 556

Question Number : 62 Question Type : MCQ

In the signal flow diagram given in the figure, u_1 and u_2 are possible inputs whereas y_1 and y_2 are possible outputs. When would the SISO system derived from this diagram be controllable and observable?

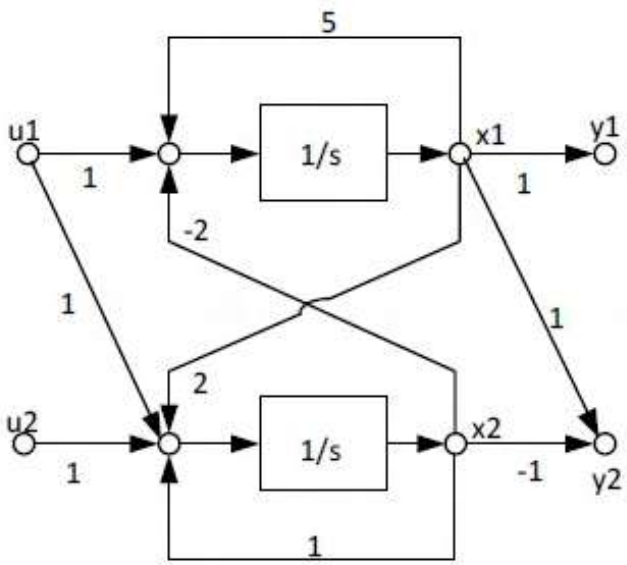

(A) When u_1 is the only input and y_1 is the only output.
(B) When u_2 is the only input and y_1 is the only output.
(C) When u_1 is the only input and y_2 is the only output.
(D) When u_2 is the only input and y_2 is the only output.

Options :

1. ✖ A
2. ✔ B

3. ✖ C

4. ✖ D

Question Number : 63 Question Type : MCQ

The transfer function of a second order real system with a perfectly flat magnitude response of unity has a pole at $(2 - j3)$. List all the poles and zeroes.

(A) Poles at $(2 \pm j3)$, no zeroes.
(B) Poles at $(\pm 2 - j3)$, one zero at origin.
(C) Poles at $(2 - j3)$, $(-2 + j3)$, zeroes at $(-2 - j3)$, $(2 + j3)$.
(D) Poles at $(2 \pm j3)$, zeroes at $(-2 \pm j3)$.

Options :

1. ✖ A

2. ✖ B

3. ✖ C

4. ✔ D

Question Number : 64 Question Type : MCQ

Find the transfer function $\frac{Y(s)}{X(s)}$ of the system given below.

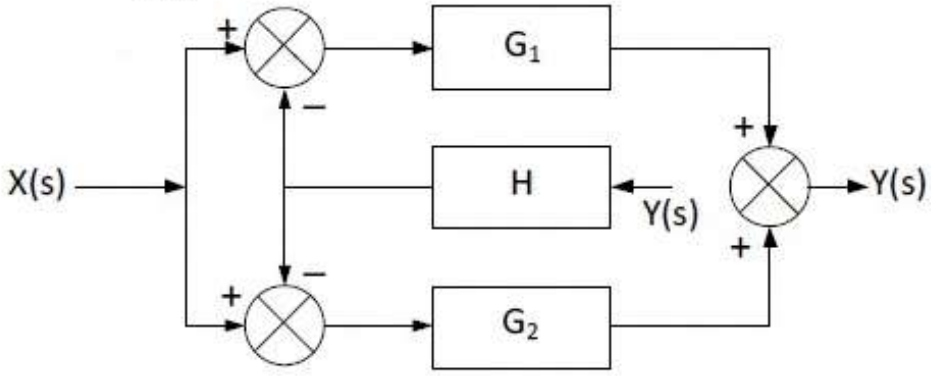

(A) $\frac{G_1}{1-HG_1} + \frac{G_2}{1-HG_2}$

(B) $\frac{G_1}{1+HG_1} + \frac{G_2}{1+HG_2}$

(C) $\frac{G_1+G_2}{1+H(G_1+G_2)}$

(D) $\frac{G_1+G_2}{1-H(G_1+G_2)}$

Options :

1. ✖ A

2. ✖ B

3. ✔ C

4. ✖ D

Question Number : 65 Question Type : MCQ

The open loop poles of a third order unity feedback system are at $0, -1, -2$. Let the frequency corresponding to the point where the root locus of the system transits to unstable region be K. Now suppose we introduce a zero in the open loop transfer function at -3, while keeping all the earlier open loop poles intact. Which one of the following is TRUE about the point where the root locus of the modified system transits to unstable region?

(A) It corresponds to a frequency greater than K
(B) It corresponds to a frequency less than K
(C) It corresponds to a frequency K
(D) Root locus of modified system never transits to unstable region

Options :

1. ✖ A
2. ✖ B
3. ✖ C
4. ✔ D

SESSION - 2

Graduate Aptitude Test in Engineering

Notations :

1.Options shown in green color and with ✔ icon are correct.

2.Options shown in red color and with ✖ icon are incorrect.

Question Paper Name: EE: ELECTRICAL ENGINEERING 7th Feb Shift2
Number of Questions: 65
Total Marks: 100.0

Wrong answer for MCQ will result in negative marks, (-1/3) for 1 mark Questions and (-2/3) for 2 marks Questions.

General Aptitude

Number of Questions: 10
Section Marks: 15.0

Q.1 to Q.5 carry 1 mark each & Q.6 to Q.10 carry 2 marks each.

Question Number : 1 Question Type : MCQ

We _____ our friend's birthday and we _____ how to make it up to him.

(A) completely forgot --- don't just know
(B) forgot completely --- don't just know
(C) completely forgot --- just don't know
(D) forgot completely --- just don't know

Options :

1. ✖ A
2. ✖ B
3. ✔ C
4. ✖ D

Question Number : 2 Question Type : MCQ

Choose the statement where underlined word is used correctly.

(A) The industrialist had a <u>personnel</u> jet.
(B) I write my experience in my <u>personnel</u> diary.
(C) All <u>personnel</u> are being given the day off.
(D) Being religious is a <u>personnel</u> aspect.

Options :

1. ✖ A
2. ✖ B
3. ✔ C
4. ✖ D

Question Number : 3 Question Type : MCQ

A generic term that includes various items of clothing such as a skirt, a pair of trousers and a shirt is

(A) fabric (B) textile (C) fibre (D) apparel

Options :

1. ✖ A
2. ✖ B
3. ✖ C
4. ✔ D

Question Number : 4 Question Type : MCQ

Based on the given statements, select the most appropriate option to solve the given question.

What will be the total weight of 10 poles each of same weight?

Statements:
(I) One fourth of the weight of a pole is 5 Kg.
(II) The total weight of these poles is 160 kg more than the total weight of two poles.

(A) Statement I alone is not sufficient.
(B) Statement II alone is not sufficient.
(C) Either I or II alone is sufficient.
(D) Both statements I and II together are not sufficient.

Options :

1. ✖ A
2. ✖ B
3. ✔ C
4. ✖ D

Question Number : 5 Question Type : MCQ

Consider a function $f(x) = 1 - |x|$ on $-1 \leq x \leq 1$. The value of x at which the function attains a maximum, and the maximum value of the function are:

(A) 0, −1 (B) −1, 0 (C) 0, 1 (D) −1, 2

Options :

1. ✖ A
2. ✖ B
3. ✔ C
4. ✖ D

Question Number : 6 Question Type : MCQ

Out of the following four sentences, select the most suitable sentence with respect to grammar and usage:

(A) Since the report lacked needed information, it was of no use to them.
(B) The report was useless to them because there were no needed information in it.
(C) Since the report did not contain the needed information, it was not real useful to them.
(D) Since the report lacked needed information, it would not had been useful to them.

Options :

1. ✔ A
2. ✖ B
3. ✖ C
4. ✖ D

Question Number : 7 Question Type : MCQ

In a triangle PQR, PS is the angle bisector of $\angle QPR$ and $\angle QPS = 60°$. What is the length of PS?

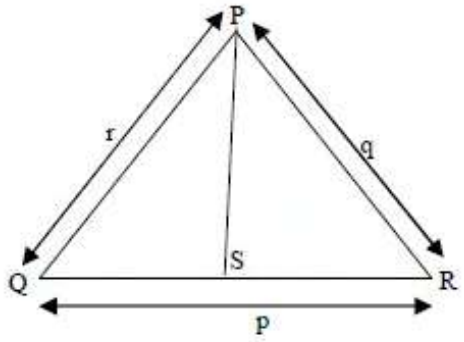

(A) $\frac{(q+r)}{qr}$
(B) $\frac{qr}{(q+r)}$
(C) $\sqrt{(q^2+r^2)}$
(D) $\frac{(q+r)^2}{qr}$

Options :
1. ✖ A
2. ✔ B
3. ✖ C
4. ✖ D

Question Number : 8 Question Type :NAT

If p, q, r, s are distinct integers such that:
f (p, q, r, s) = max (p, q, r, s)
g (p, q, r, s) = min (p, q, r, s)
h (p, q, r, s) = remainder of (p × q) / (r × s) if (p × q) > (r × s) or remainder of (r × s) / (p × q) if (r × s) > (p × q)

Also a function fgh (p, q, r, s) = f (p, q, r, s) × g (p, q, r, s) × h (p, q, r, s)
Also the same operations are valid with two variable functions of the form f (p, q).
What is the value of fg (h (2,5,7,3), 4,6,8)?

Correct Answers :
8

Question Number : 9 Question Type : MCQ

If the list of letters, P, R, S, T, U is an arithmetic sequence, which of the following are also in arithmetic sequence?

I. 2P, 2R, 2S, 2T, 2U
II. P−3, R−3, S−3, T−3, U−3
III. P^2, R^2, S^2, T^2, U^2

(A) I only
(B) I and II
(C) II and III
(D) I and III

Options :

1. ✖ A
2. ✔ B
3. ✖ C
4. ✖ D

Question Number : 10 Question Type : MCQ

Four branches of a company are located at M, N, O, and P. M is north of N at a distance of 4 km; P is south of O at a distance of 2 km; N is southeast of O by 1 km. What is the distance between M and P in km?

(A) 5.34 (B) 6.74 (C) 28.5 (D) 45.49

Options :

1. ✔ A
2. ✖ B
3. ✖ C
4. ✖ D

Electrical Engineering

Number of Questions:	55
Section Marks:	85.0

Q.11 to Q.35 carry 1 mark each & Q.36 to Q.65 carry 2 marks each.

Question Number : 11 Question Type : MCQ

Given $f(z) = g(z) + h(z)$, where f, g, h are complex valued functions of a complex variable z. Which one of the following statements is TRUE?

(A) If $f(z)$ is differentiable at z_0, then $g(z)$ and $h(z)$ are also differentiable at z_0.
(B) If $g(z)$ and $h(z)$ are differentiable at z_0, then $f(z)$ is also differentiable at z_0.
(C) If $f(z)$ is continuous at z_0, then it is differentiable at z_0.
(D) If $f(z)$ is differentiable at z_0, then so are its real and imaginary parts.

Options :

1. ✖ A
2. ✔ B
3. ✖ C
4. ✖ D

Question Number : 12 Question Type : MCQ

We have a set of 3 linear equations in 3 unknowns. '$X \equiv Y$' means X and Y are equivalent statements and '$X \not\equiv Y$' means X and Y are not equivalent statements.

P: There is a unique solution.
Q: The equations are linearly independent.
R: All eigenvalues of the coefficient matrix are nonzero.
S: The determinant of the coefficient matrix is nonzero.

Which one of the following is TRUE?

(A) $P \equiv Q \equiv R \equiv S$
(B) $P \equiv R \not\equiv Q \equiv S$
(C) $P \equiv Q \not\equiv R \equiv S$
(D) $P \not\equiv Q \not\equiv R \not\equiv S$

Options :

1. ✔ A
2. ✖ B
3. ✖ C
4. ✖ D

Question Number : 13 Question Type : MCQ

Match the following.

P. Stokes's Theorem	1. $\oiint \boldsymbol{D}.\boldsymbol{ds} = Q$
Q. Gauss's Theorem	2. $\oint f(z)dz = 0$
R. Divergence Theorem	3. $\iiint (\nabla.\boldsymbol{A})dv = \oiint \boldsymbol{A}.\boldsymbol{ds}$
S. Cauchy's Integral Theorem	4. $\iint (\nabla \times \boldsymbol{A}).\boldsymbol{ds} = \oint \boldsymbol{A}.\boldsymbol{dl}$

(A)	(B)	(C)	(D)
P-2	P-4	P-4	P-3
Q-1	Q-1	Q-3	Q-4
R-4	R-3	R-1	R-2
S-3	S-2	S-2	S-1

Options :

1. ✖ A
2. ✔ B
3. ✖ C
4. ✖ D

Question Number : 14 Question Type : MCQ

The Laplace transform of $f(t) = 2\sqrt{t/\pi}$ is $s^{-3/2}$. The Laplace transform of $g(t) = \sqrt{1/\pi t}$ is

(A) $3s^{-5/2}/2$
(B) $s^{-1/2}$
(C) $s^{1/2}$
(D) $s^{3/2}$

Options :

1. ✖ A
2. ✔ B
3. ✖ C

4. ✖ D

Question Number : 15 Question Type : MCQ

Match the following.

Instrument Type	Used for
P. Permanent magnet moving coil	1. DC Only
Q. Moving iron connected through current transformer	2. AC Only
R. Rectifier	3. AC and DC
S. Electrodynamometer	

(A)	(B)	(C)	(D)
P-1	P-1	P-1	P-3
Q-2	Q-3	Q-2	Q-1
R-1	R-1	R-3	R-2
S-3	S-2	S-3	S-1

Options :

1. ✖ A
2. ✖ B
3. ✔ C
4. ✖ D

Question Number : 16 Question Type : MCQ

A 3-phase balanced load which has a power factor of 0.707 is connected to a balanced supply. The power consumed by the load is 5 kW. The power is measured by the two-wattmeter method. The readings of the two wattmeters are

(A) 3.94 kW and 1.06 kW
(B) 2.50 kW and 2.50 kW
(C) 5.00 kW and 0.00 kW
(D) 2.96 kW and 2.04 kW

Options :

1. ✔ A
2. ✖ B
3. ✖ C
4. ✖ D

Question Number : 17 Question Type : NAT

A capacitive voltage divider is used to measure the bus voltage V_{bus} in a high-voltage 50 Hz AC system as shown in the figure. The measurement capacitors C_1 and C_2 have tolerances of $\pm 10\%$ on their nominal capacitance values. If the bus voltage V_{bus} is 100 kV rms, the maximum rms output voltage V_{out} (in kV), considering the capacitor tolerances, is _____.

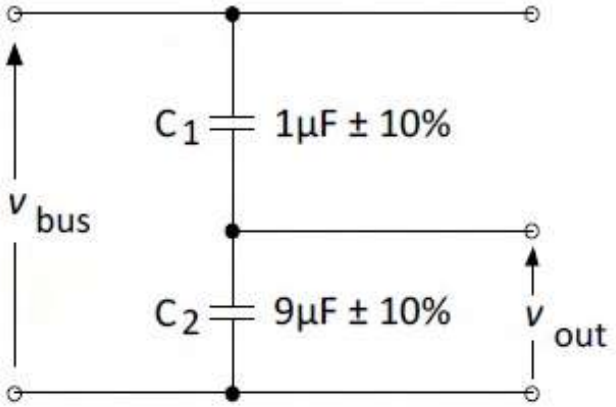

Correct Answer :

11.75 to 12.25

Question Number : 18 Question Type : MCQ

In the following circuit, the input voltage V_{in} is $100\sin(100\pi t)$. For $100\pi RC = 50$, the average voltage across R (in Volts) under steady-state is nearest to

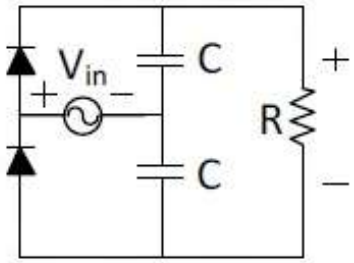

(A) 100 (B) 31.8 (C) 200 (D) 63.6

Options :

1. ✖ A
2. ✖ B
3. ✔ C
4. ✖ D

Question Number : 19 Question Type : MCQ

Two semi-infinite dielectric regions are separated by a plane boundary at $y = 0$. The dielectric constants of region 1 ($y < 0$) and region 2 ($y > 0$) are 2 and 5, respectively. Region 1 has uniform electric field $\vec{E} = 3\hat{a}_x + 4\hat{a}_y + 2\hat{a}_z$, where $\hat{a}_x$, $\hat{a}_y$, and $\hat{a}_z$ are unit vectors along the x, y and z axes, respectively. The electric field in region 2 is

(A) $3\hat{a}_x + 1.6\hat{a}_y + 2\hat{a}_z$
(B) $1.2\hat{a}_x + 4\hat{a}_y + 2\hat{a}_z$
(C) $1.2\hat{a}_x + 4\hat{a}_y + 0.8\hat{a}_z$
(D) $3\hat{a}_x + 10\hat{a}_y + 0.8\hat{a}_z$

Options :

1. ✔ A

2. ✖ B

3. ✖ C

4. ✖ D

Question Number : 20 Question Type : NAT

A circular turn of radius 1 m revolves at 60 rpm about its diameter aligned with the x-axis as shown in the figure. The value of μ_0 is $4\pi \times 10^{-7}$ in SI unit. If a uniform magnetic field intensity $\vec{H} = 10^7\ \hat{z}$ A/m is applied, then the peak value of the induced voltage, V_{turn} (in Volts), is _____.

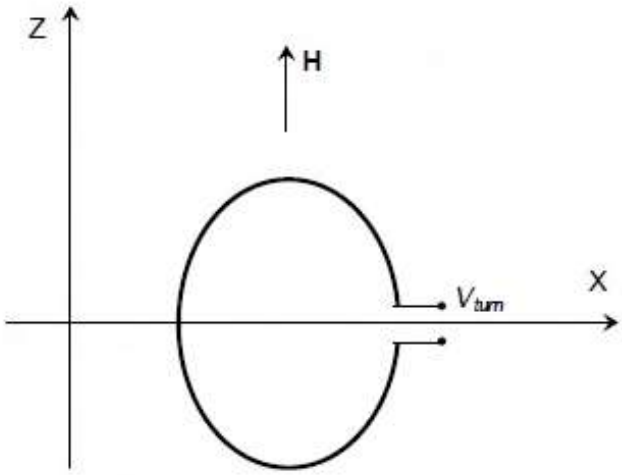

Correct Answer :

246 to 250

Question Number : 21 Question Type : NAT

The operational amplifier shown in the figure is ideal. The input voltage (in Volt) is $V_i = 2\sin(2\pi \times 2000t)$. The amplitude of the output voltage V_o (in Volt) is _____.

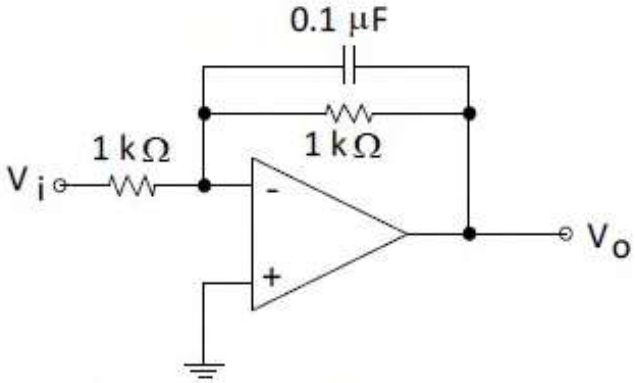

Correct Answer:

1.1 to 1.4

Question Number : 22 Question Type : NAT

In the following circuit, the transistor is in active mode and $V_C = 2$ V. To get $V_C = 4$ V, we replace R_C with R_C'. Then the ratio R_C'/R_C is _____.

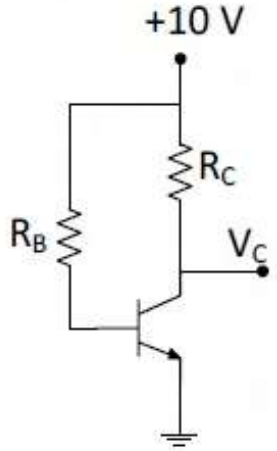

Correct Answer:
0.74 to 0.76

Question Number : 23 Question Type : MCQ

Consider the following Sum of Products expression, F.

$$F = ABC + \bar{A}\bar{B}C + A\bar{B}C + \bar{A}BC + \bar{A}\bar{B}\bar{C}$$

The equivalent Product of Sums expression is

(A) $F = (A + \bar{B} + C)(\bar{A} + B + C)(\bar{A} + \bar{B} + C)$
(B) $F = (A + \bar{B} + \bar{C})(A + B + C)(\bar{A} + \bar{B} + \bar{C})$
(C) $F = (\bar{A} + B + \bar{C})(A + \bar{B} + \bar{C})(A + B + C)$
(D) $F = (\bar{A} + \bar{B} + C)(A + B + \bar{C})(A + B + C)$

Options :
1. ✔ A
2. ✖ B
3. ✖ C
4. ✖ D

Question Number : 24 Question Type : MCQ

The filters F1 and F2 having characteristics as shown in Figures (a) and (b) are connected as shown in Figure (c).

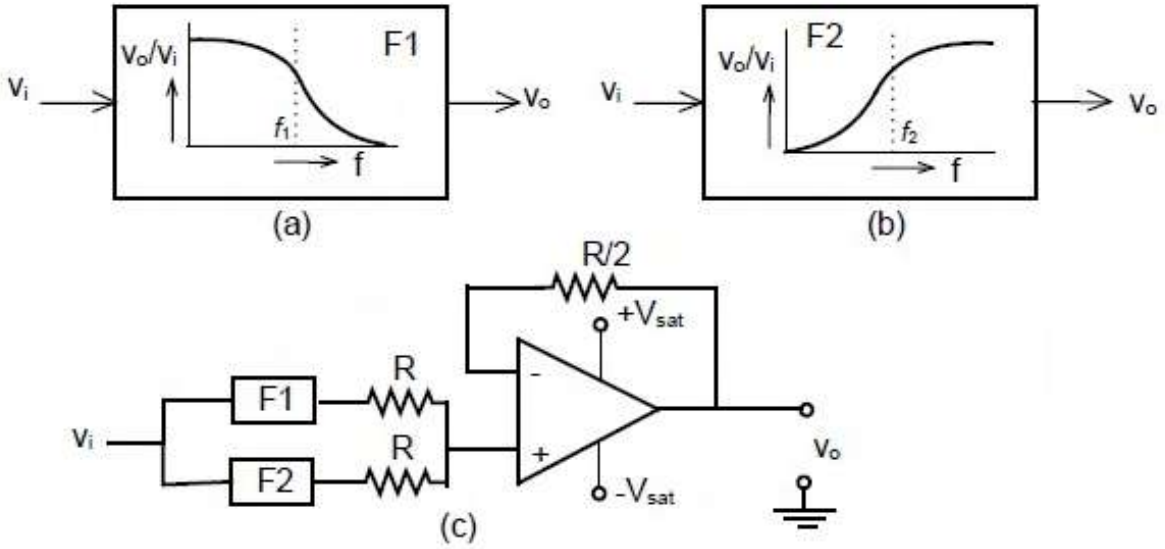

The cut-off frequencies of F1 and F2 are f_1 and f_2 respectively. If $f_1 < f_2$, the resultant circuit exhibits the characteristic of a

(A) Band-pass filter
(B) Band-stop filter
(C) All pass filter
(D) High-Q filter

Options :

1. ✖ A
2. ✔ B
3. ✖ C
4. ✖ D

Question Number : 25 Question Type : MCQ

When a bipolar junction transistor is operating in the saturation mode, which one of the following statements is TRUE about the state of its collector-base (CB) and the base-emitter (BE) junctions?

(A) The CB junction is forward biased and the BE junction is reverse biased.
(B) The CB junction is reverse biased and the BE junction is forward biased.
(C) Both the CB and BE junctions are forward biased.
(D) Both the CB and BE junctions are reverse biased.

Options :

1. ✖ A
2. ✖ B
3. ✔ C
4. ✖ D

Question Number : 26 Question Type : MCQ

The synchronous generator shown in the figure is supplying active power to an infinite bus via two short, lossless transmission lines, and is initially in steady state. The mechanical power input to the generator and the voltage magnitude E are constant. If one line is tripped at time t_1 by opening the circuit breakers at the two ends (although there is no fault), then it is seen that the generator undergoes a stable transient. Which one of the following waveforms of the rotor angle δ shows the transient correctly?

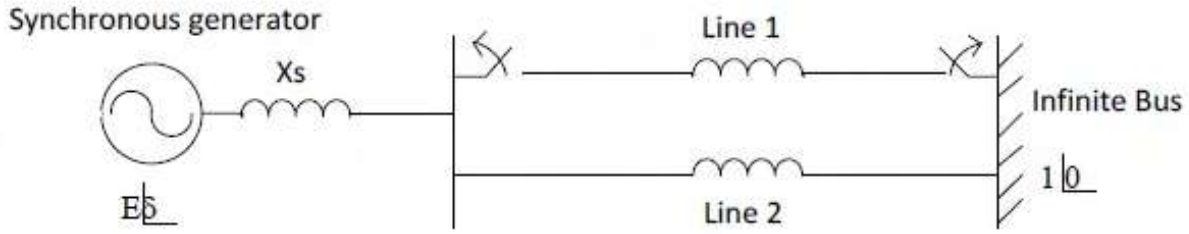

(A)

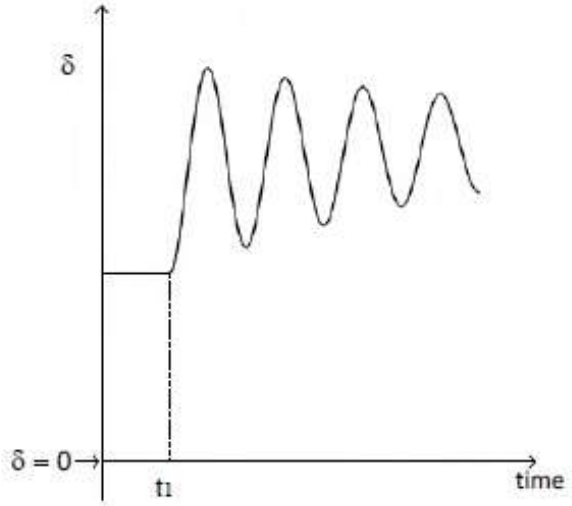

(B)

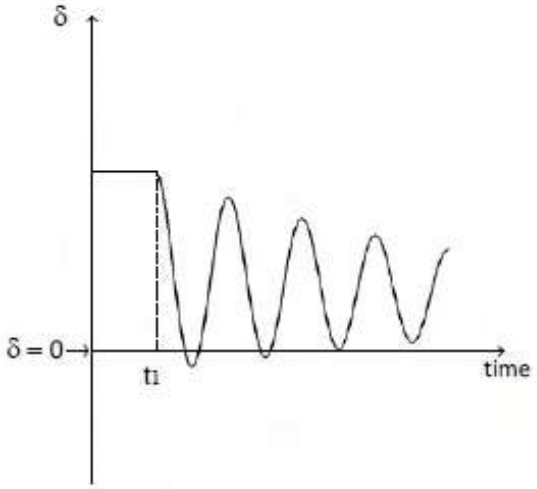

(C)

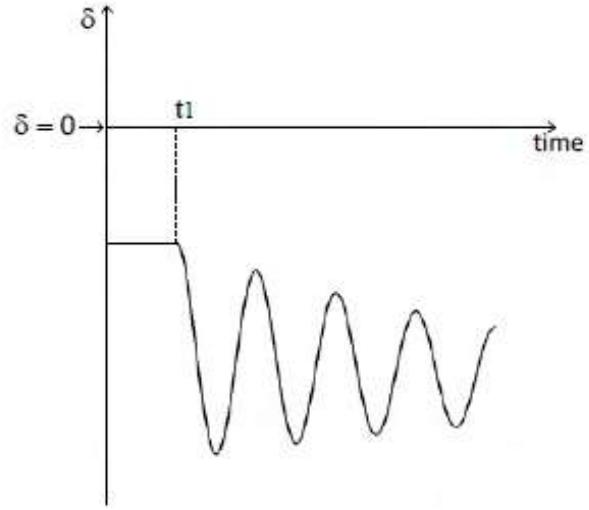

(D)

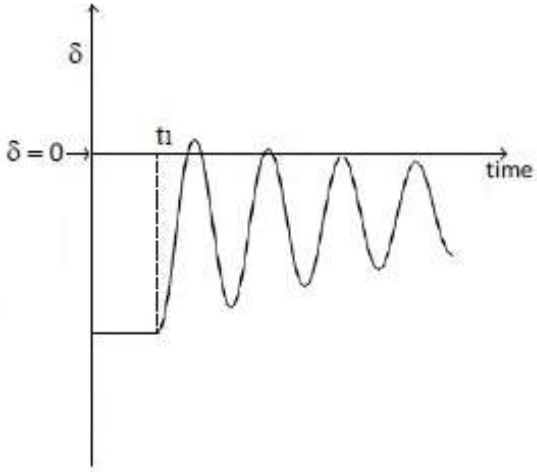

Options :

1. ✔ A
2. ✖ B
3. ✖ C
4. ✖ D

Question Number : 27 Question Type : MCQ

A 3-bus power system network consists of 3 transmission lines. The bus admittance matrix of the uncompensated system is

$$\begin{bmatrix} -j6 & j3 & j4 \\ j3 & -j7 & j5 \\ j4 & j5 & -j8 \end{bmatrix} \text{pu.}$$

If the shunt capacitance of all transmission lines is 50% compensated, the imaginary part of the 3rd row 3rd column element (in pu) of the bus admittance matrix after compensation is

(A) $-j7.0$ (B) $-j8.5$ (C) $-j7.5$ (D) $-j9.0$

Options :

1. ✖ A
2. ✔ B
3. ✖ C
4. ✖ D

Question Number : 28 Question Type : MCQ

A series RL circuit is excited at $t = 0$ by closing a switch as shown in the figure. Assuming zero initial conditions, the value of $\frac{d^2i}{dt^2}$ at $t = 0^+$ is

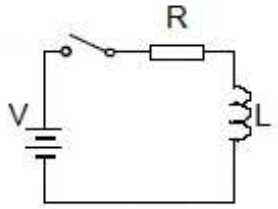

(A) $\frac{V}{L}$ (B) $\frac{-V}{R}$ (C) 0 (D) $\frac{-RV}{L^2}$

Options :

1. ✖ A
2. ✖ B
3. ✖ C
4. ✔ D

Question Number : 29 Question Type : NAT

The current i (in Ampere) in the 2 Ω resistor of the given network is _____.

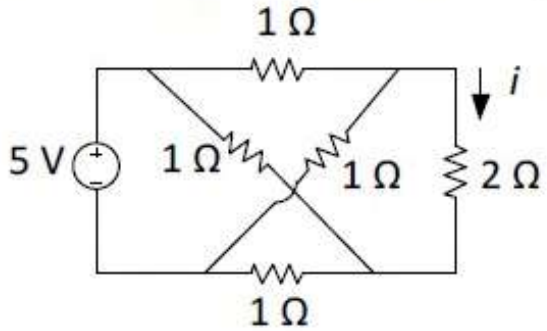

Correct Answer :

0

Question Number : 30 Question Type : MCQ

Find the transformer ratios a and b such that the impedance (Z_{in}) is resistive and equals 2.5 Ω when the network is excited with a sine wave voltage of angular frequency of 5000 rad/s.

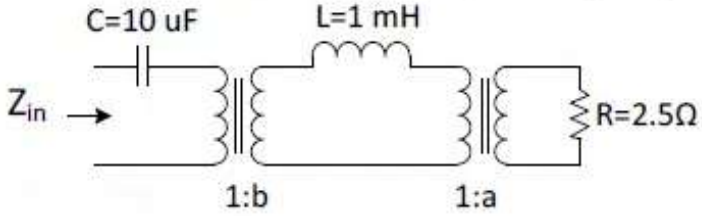

(A) $a = 0.5,\ b = 2.0$
(B) $a = 2.0,\ b = 0.5$
(C) $a = 1.0,\ b = 1.0$
(D) $a = 4.0,\ b = 0.5$

Options :

1. ✖ A
2. ✔ B
3. ✖ C
4. ✖ D

Question Number : 31 Question Type : NAT

A shunt-connected DC motor operates at its rated terminal voltage. Its no-load speed is 200 radian/second. At its rated torque of 500 Nm, its speed is 180 radian/second. The motor is used to directly drive a load whose load torque T_L depends on its rotational speed ω_r (in radian/second), such that $T_L = 2.78 \times \omega_r$. Neglecting rotational losses, the steady-state speed (in radian/second) of the motor, when it drives this load, is _____.

Correct Answer :

177 to 183

Question Number : 32 Question Type : NAT

The figure shows the per-phase equivalent circuit of a two-pole three-phase induction motor operating at 50 Hz. The "air-gap" voltage, V_g across the magnetizing inductance, is 210 V rms, and the slip, s, is 0.05. The torque (in Nm) produced by the motor is _____.

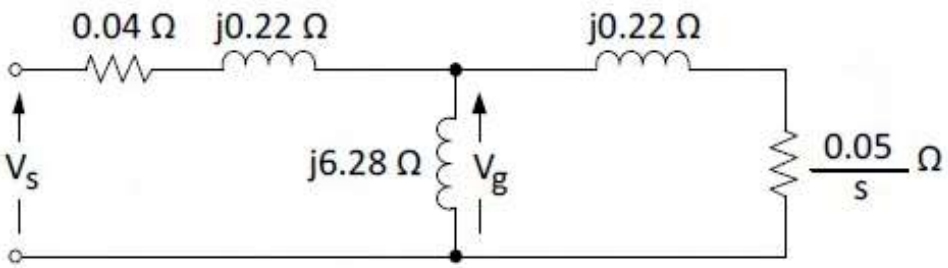

Correct Answer :
400 to 403

Question Number : 33 Question Type : MCQ

A 4-pole, separately excited, wave wound DC machine with negligible armature resistance is rated for 230 V and 5 kW at a speed of 1200 rpm. If the same armature coils are reconnected to form a lap winding, what is the rated voltage (in volts) and power (in kW) respectively at 1200 rpm of the reconnected machine if the field circuit is left unchanged ?

(A) 230 and 5 (B) 115 and 5 (C) 115 and 2.5 (D) 230 and 2.5

Options :

1. ✖ A
2. ✔ B
3. ✖ C
4. ✖ D

Question Number : 34 Question Type : NAT

An open loop control system results in a response of $e^{-2t}(\sin 5t + \cos 5t)$ for a unit impulse input. The DC gain of the control system is _____.

Correct Answer :
0.23 to 0.25

Question Number : 35 Question Type : MCQ

Nyquist plots of two functions $G_1(s)$ and $G_2(s)$ are shown in figure.

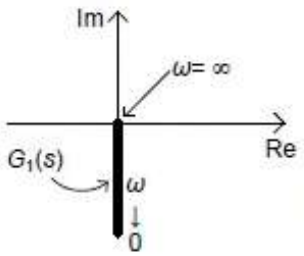

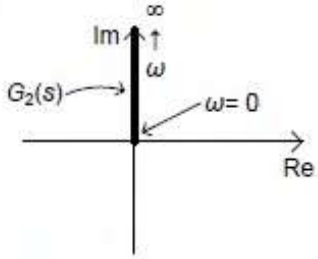

Nyquist plot of the product of $G_1(s)$ and $G_2(s)$ is

(A)

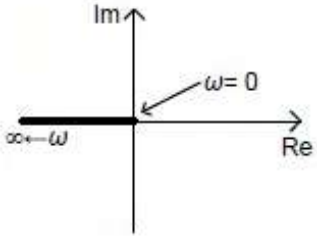

(B)

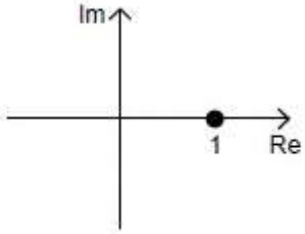

(C)

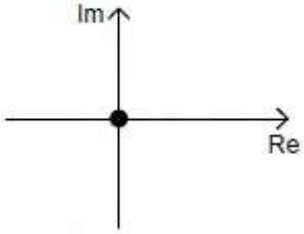

(D)

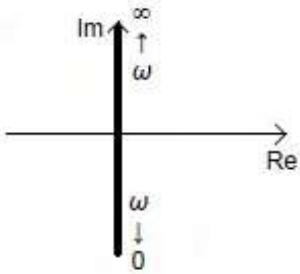

Options :

1. ✖ A
2. ✔ B
3. ✖ C
4. ✖ D

Question Number : 36 Question Type : NAT

The volume enclosed by the surface $f(x, y) = e^x$ over the triangle bounded by the lines $x = y; x = 0; y = 1$ in the xy plane is _____.

Correct Answer :

0.70 to 0.76

Question Number : 37 Question Type : MCQ

Two coins R and S are tossed. The 4 joint events $H_R H_S, T_R T_S, H_R T_S, T_R H_S$ have probabilities 0.28, 0.18, 0.30, 0.24, respectively, where H represents head and T represents tail. Which one of the following is TRUE?

(A) The coin tosses are independent.
(B) R is fair, S is not.
(C) S is fair, R is not.
(D) The coin tosses are dependent.

Options :

1. ✖ A
2. ✖ B
3. ✖ C
4. ✔ D

Question Number : 38 Question Type : NAT

A differential equation $\frac{di}{dt} - 0.2i = 0$ is applicable over $-10 < t < 10$. If $i(4) = 10$, then $i(-5)$ is _____.

Correct Answer :

1.6 to 1.7

Question Number : 39 Question Type : MCQ

Consider a signal defined by

$$x(t) = \begin{cases} e^{j10t} & \text{for } |t| \le 1 \\ 0 & \text{for } |t| > 1 \end{cases}$$

Its Fourier Transform is

(A) $\frac{2\sin(\omega-10)}{\omega-10}$

(B) $2e^{j10}\frac{\sin(\omega-10)}{\omega-10}$

(C) $\frac{2\sin\omega}{\omega-10}$

(D) $e^{j10\omega}\frac{2\sin\omega}{\omega}$

Options :

1. ✔ A
2. ✖ B
3. ✖ C
4. ✖ D

Question Number : 40 Question Type : NAT

The coils of a wattmeter have resistances 0.01 Ω and 1000 Ω; their inductances may be neglected. The wattmeter is connected as shown in the figure, to measure the power consumed by a load, which draws 25 A at power factor 0.8. The voltage across the load terminals is 30 V. The percentage error on the wattmeter reading is _____.

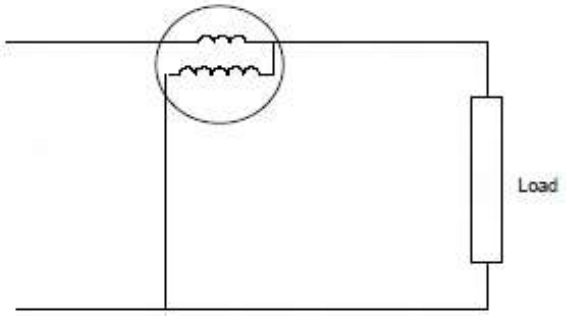

Correct Answer :

0.14 to 0.16

Question Number : 41 Question Type : NAT

A buck converter feeding a variable resistive load is shown in the figure. The switching frequency of the switch S is 100 kHz and the duty ratio is 0.6. The output voltage V_O is 36 V. Assume that all the components are ideal, and that the output voltage is ripple-free. The value of R (in Ohm) that will make the inductor current (i_L) just continuous is _____.

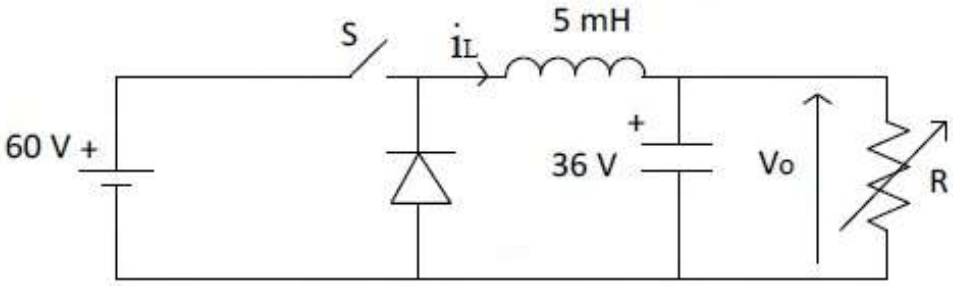

Correct Answer :

2480 to 2520

Question Number : 42 Question Type : NAT

For the switching converter shown in the following figure, assume steady-state operation. Also assume that the components are ideal, the inductor current is always positive and continuous and switching period is T_s. If the voltage V_L is as shown, the duty cycle of the switch S is _____.

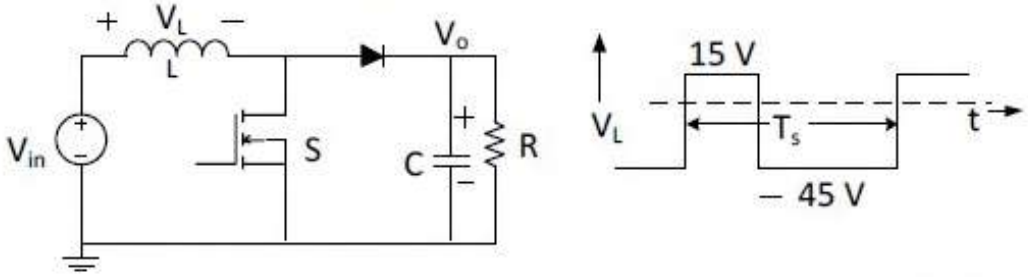

Correct Answer :
0.75

Question Number : 43 Question Type : NAT

In the given rectifier, the delay angle of the thyristor T_1 measured from the positive going zero crossing of V_s is 30°. If the input voltage V_s is $100\sin(100\pi t)$ V, the average voltage across R (in Volt) under steady-state is _____.

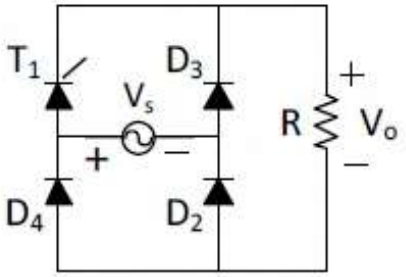

Correct Answer:
61 to 62

Question Number : 44 Question Type : MCQ

For linear time invariant systems, that are Bounded Input Bounded Output stable, which one of the following statements is TRUE?

(A) The impulse response will be integrable, but may not be absolutely integrable.
(B) The unit impulse response will have finite support.
(C) The unit step response will be absolutely integrable.
(D) The unit step response will be bounded.

Options :
1. ✖ A
2. ✖ B
3. ✖ C
4. ✔ D

Question Number : 45 Question Type : MCQ

The z-Transform of a sequence $x[n]$ is given as $X(z) = 2z + 4 - 4/z + 3/z^2$. If $y[n]$ is the first difference of $x[n]$, then $Y(z)$ is given by

(A) $2z + 2 - 8/z + 7/z^2 - 3/z^3$
(B) $-2z + 2 - 6/z + 1/z^2 - 3/z^3$
(C) $-2z - 2 + 8/z - 7/z^2 + 3/z^3$
(D) $4z - 2 - 8/z - 1/z^2 + 3/z^3$

Options :
1. ✔ A
2. ✖ B

3. ✖ C

4. ✖ D

Question Number : 46 Question Type : MCQ

Two semi-infinite conducting sheets are placed at right angles to each other as shown in the figure. A point charge of $+Q$ is placed at a distance of d from both sheets. The net force on the charge is $\frac{Q^2}{4\pi\epsilon_0}\frac{K}{d^2}$, where K is given by

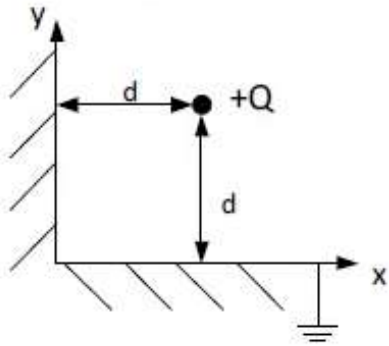

(A) 0 (B) $-\frac{1}{4}\hat{i}-\frac{1}{4}\hat{j}$ (C) $-\frac{1}{8}\hat{i}-\frac{1}{8}\hat{j}$ (D) $\frac{1-2\sqrt{2}}{8\sqrt{2}}\hat{i}+\frac{1-2\sqrt{2}}{8\sqrt{2}}\hat{j}$

Options :

1. ✖ A

2. ✖ B

3. ✖ C

4. ✔ D

Question Number : 47 Question Type : MCQ

In the following sequential circuit, the initial state (before the first clock pulse) of the circuit is $Q_1Q_o = 00$. The state (Q_1Q_o), immediately after the 333rd clock pulse is

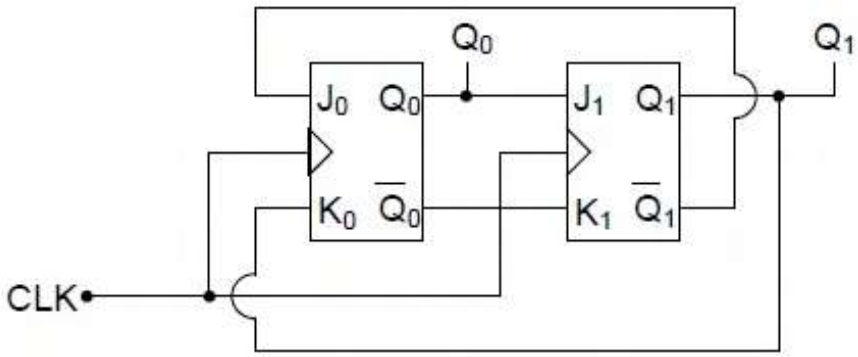

(A) 00 (B) 01 (C) 10 (D) 11

Options :

1. ✖ A

2. ✔ B

3. ✖ C

4. ✖ D

Question Number : 48 Question Type : MCQ

A Boolean function $f(A,B,C,D) = \prod(1,5,12,15)$ is to be implemented using an 8×1 multiplexer (A is MSB). The inputs ABC are connected to the select inputs S_2 S_1 S_0 of the multiplexer respectively.

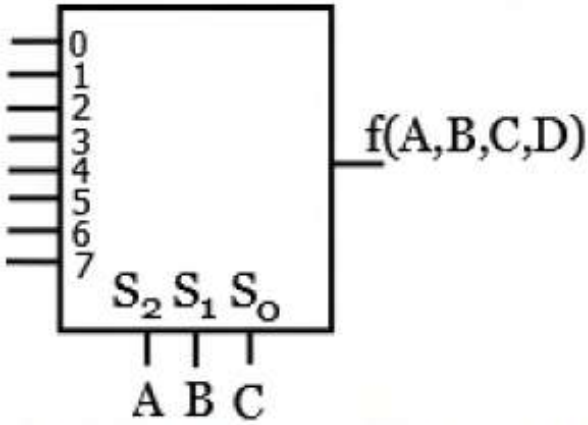

Which one of the following options gives the correct inputs to pins 0,1,2,3,4,5,6,7 in order?

(A) $D, 0, D, 0, 0, 0, \overline{D}, D$
(B) $\overline{D}, 1, \overline{D}, 1, 1, 1, D, \overline{D}$
(C) $D, 1, D, 1, 1, 1, \overline{D}, D$
(D) $\overline{D}, 0, \overline{D}, 0, 0, 0, D, \overline{D}$

Options :

1. ✖ A
2. ✔ B
3. ✖ C
4. ✖ D

Question Number : 49 Question Type : MCQ

The saturation voltage of the ideal op-amp shown below is ± 10 V. The output voltage v_0 of the following circuit in the steady-state is

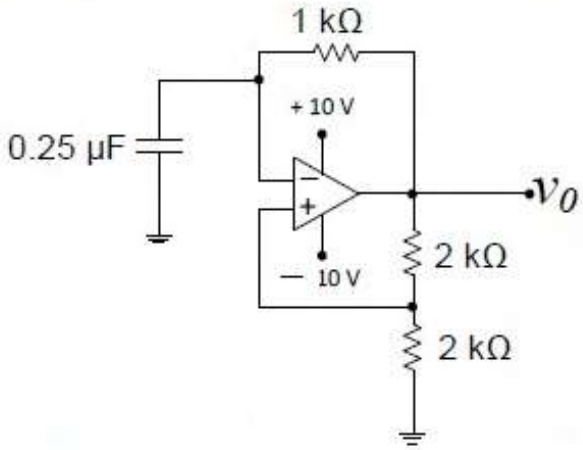

(A) square wave of period 0.55 ms.
(B) triangular wave of period 0.55 ms.
(C) square wave of period 0.25 ms.
(D) triangular wave of period 0.25 ms.

Options :

1. ✔ A
2. ✖ B
3. ✖ C
4. ✖ D

Question Number : 50 Question Type : NAT

The incremental costs (in Rupees/MWh) of operating two generating units are functions of their respective powers P_1 and P_2 in MW, and are given by

$$\frac{dC_1}{dP_1} = 0.2P_1 + 50$$
$$\frac{dC_2}{dP_2} = 0.24P_2 + 40$$

where

$$20 \text{ MW} \leq P_1 \leq 150 \text{ MW}$$
$$20 \text{ MW} \leq P_2 \leq 150 \text{ MW}.$$

For a certain load demand, P_1 and P_2 have been chosen such that $dC_1/dP_1 = 76$ Rs/MWh and $dC_2/dP_2 = 68.8$ Rs/MWh. If the generations are rescheduled to minimize the total cost, then P_2 is _____.

Correct Answer:
135 to 137

Question Number : 51 Question Type : NAT

A composite conductor consists of three conductors of radius R each. The conductors are arranged as shown below. The geometric mean radius (GMR) (in cm) of the composite conductor is kR. The value of k is _____.

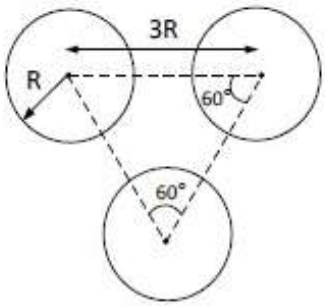

Correct Answer:
1.85 to 1.95

Question Number : 52 Question Type : MCQ

A 3-phase transformer rated for 33 kV/11 kV is connected in delta/star as shown in figure. The current transformers (CTs) on low and high voltage sides have a ratio of 500/5. Find the currents i_1 and i_2, if the fault current is 300 A as shown in figure.

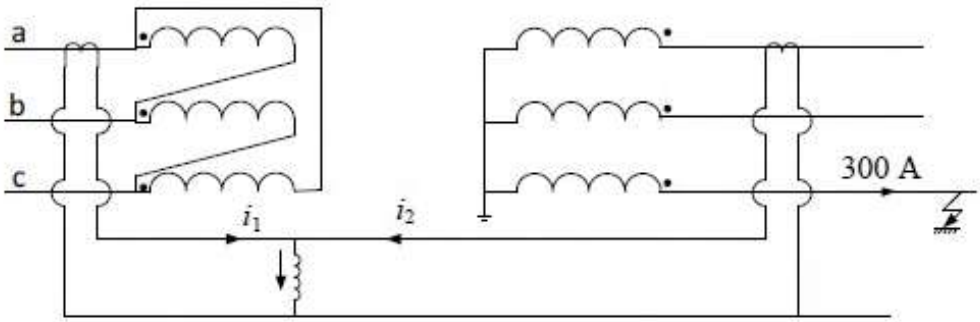

(A) $i_1 = 1/\sqrt{3}\ A, i_2 = 0\ A$
(B) $i_1 = 0\ A, i_2 = 0\ A$
(C) $i_1 = 0\ A, i_2 = 1/\sqrt{3}\ A$
(D) $i_1 = 1/\sqrt{3}\ A, i_2 = 1/\sqrt{3}\ A$

Options :

1. ✔ A
2. ✖ B
3. ✖ C
4. ✖ D

Question Number : 53 Question Type : MCQ

A balanced (positive sequence) three-phase AC voltage source is connected to a balanced, star connected load through a star-delta transformer as shown in the figure. The line-to-line voltage rating is 230 V on the star side, and 115 V on the delta side. If the magnetizing current is neglected and $\overline{I_s} = 100\angle 0^\circ$ A, then what is the value of $\overline{I_p}$ in Ampere?

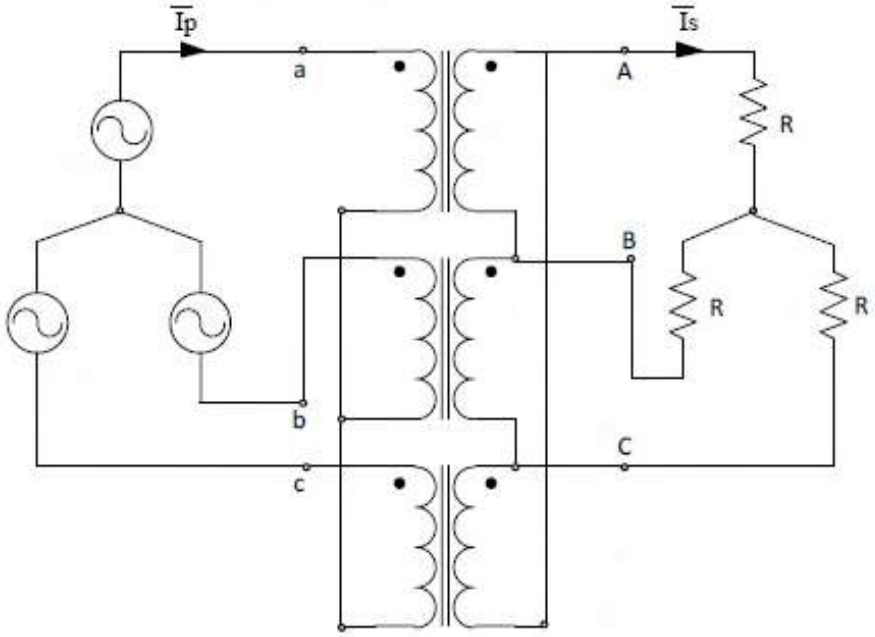

(A) $50\ \angle 30^\circ$
(B) $50\ \angle -30^\circ$
(C) $50\sqrt{3}\ \angle 30^\circ$
(D) $200\ \angle 30^\circ$

Options :

1. ✔ A

2. ✖ B

3. ✖ C

4. ✖ D

Question Number : 54 Question Type : MCQ

In the given network $V_1 = 100\angle 0°$ V, $V_2 = 100\angle -120°$ V, $V_3 = 100\angle +120°$ V. The phasor current i (in Ampere) is

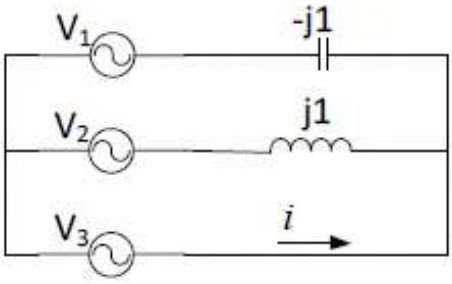

(A) $173.2\angle -60°$ (B) $173.2\angle 120°$ (C) $100.0\angle -60°$ (D) $100.0\angle 120°$

Options :

1. ✔ A

2. ✖ B

3. ✖ C

4. ✖ D

Question Number : 55 Question Type : NAT

A symmetrical square wave of 50% duty cycle has amplitude of ± 15 V and time period of 0.4π ms. This square wave is applied across a series RLC circuit with $R = 5\ \Omega$, $L = 10$ mH, and $C = 4\ \mu$F. The amplitude of the 5000 rad/s component of the capacitor voltage (in Volt) is _____.

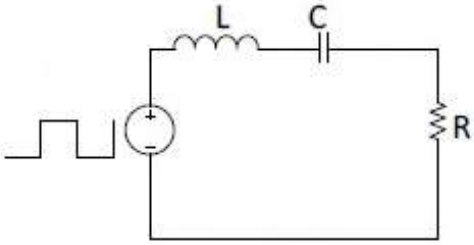

Correct Answer:

190 to 192

Question Number : 56 Question Type : NAT

Two identical coils each having inductance L are placed together on the same core. If an overall inductance of αL is obtained by interconnecting these two coils, the minimum value of α is ____.

Correct Answer :

0

Question Number : 57 Question Type : MCQ

A three-winding transformer is connected to an AC voltage source as shown in the figure. The number of turns are as follows: $N_1 = 100, N_2 = 50,\ N_3 = 50$. If the magnetizing current is neglected, and the currents in two windings are $\overline{I_2} = 2\angle 30°$ A and $\overline{I_3} = 2\angle 150°$ A, then what is the value of the current $\overline{I_1}$ in Ampere?

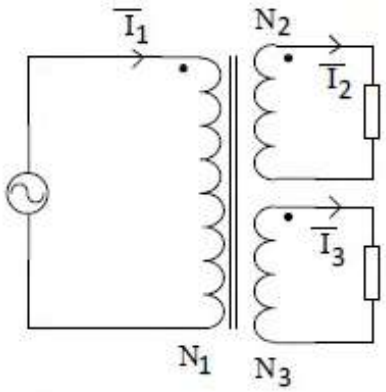

(A) $1\angle 90°$ (B) $1\angle 270°$ (C) $4\angle 90°$ (D) $4\angle 270°$

Options :

1. ✔ A
2. ✖ B
3. ✖ C
4. ✖ D

Question Number : 58 Question Type : NAT

With an armature voltage of 100 V and rated field winding voltage, the speed of a separately excited DC motor driving a fan is 1000 rpm, and its armature current is 10 A. The armature resistance is 1 Ω. The load torque of the fan load is proportional to the square of the rotor speed. Neglecting rotational losses, the value of the armature voltage (in Volt) which will reduce the rotor speed to 500 rpm is _____.

Correct Answer:

47.5

Question Number : 59 Question Type : NAT

A three-phase, 11 kV, 50 Hz, 2 pole, star connected, cylindrical rotor synchronous motor is connected to an 11 kV, 50 Hz source. Its synchronous reactance is 50 Ω per phase, and its stator resistance is negligible. The motor has a constant field excitation. At a particular load torque, its stator current is 100 A at unity power factor. If the load torque is increased so that the stator current is 120 A, then the load angle (in degrees) at this load is _____.

Correct Answer :

-48 to -46

Question Number : 60 Question Type : NAT

A 220 V, 3-phase, 4-pole, 50 Hz inductor motor of wound rotor type is supplied at rated voltage and frequency. The stator resistance, magnetizing reactance, and core loss are negligible. The maximum torque produced by the rotor is 225 % of full load torque and it occurs at 15% slip. The actual rotor resistance is 0.03 Ω/phase. The value of external resistance (in Ohm) which must be inserted in a rotor phase if the maximum torque is to occur at start is _____.

Correct Answer:

0.16 to 0.18

Question Number : 61 Question Type : NAT

Two three-phase transformers are realized using single-phase transformers as shown in the figure.

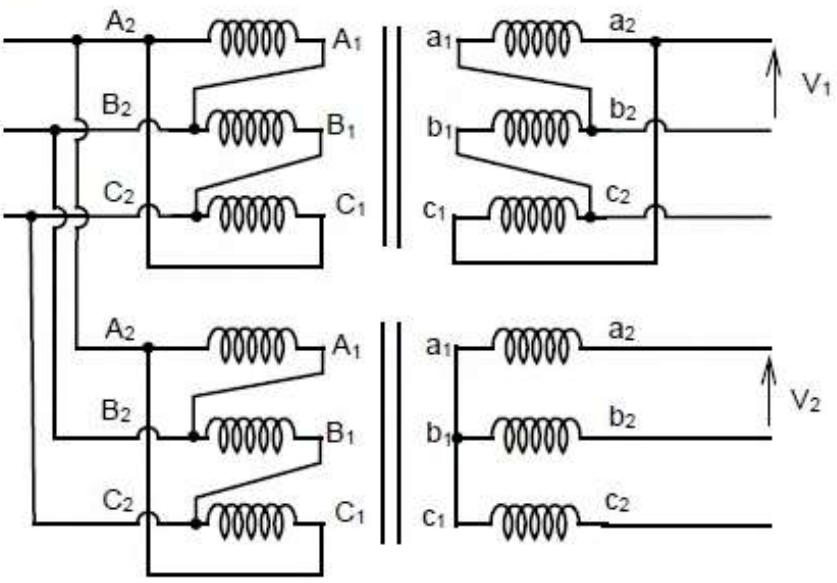

The phase difference (in degree) between voltages V_1 and V_2 is _____.

Correct Answer :

30

Question Number : 62 Question Type : MCQ

The following discrete-time equations result from the numerical integration of the differential equations of an un-damped simple harmonic oscillator with state variables x and y. The integration time step is h.

$$\frac{x_{k+1} - x_k}{h} = y_k$$

$$\frac{y_{k+1} - y_k}{h} = -x_k$$

For this discrete-time system, which one of the following statements is TRUE?

(A) The system is not stable for $h > 0$
(B) The system is stable for $h > \frac{1}{\pi}$
(C) The system is stable for $0 < h < \frac{1}{2\pi}$
(D) The system is stable for $\frac{1}{2\pi} < h < \frac{1}{\pi}$

Options :

1. ✔ A
2. ✖ B
3. ✖ C
4. ✖ D

Question Number : 63 Question Type : MCQ

The unit step response of a system with the transfer function $G(s) = \frac{1-2s}{1+s}$ is given by which one of the following waveforms?

(A)

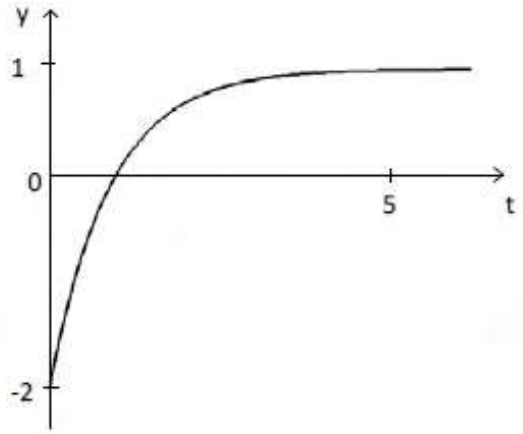

(B)

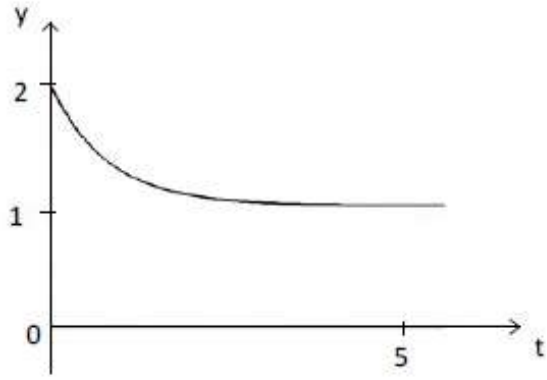

(C)

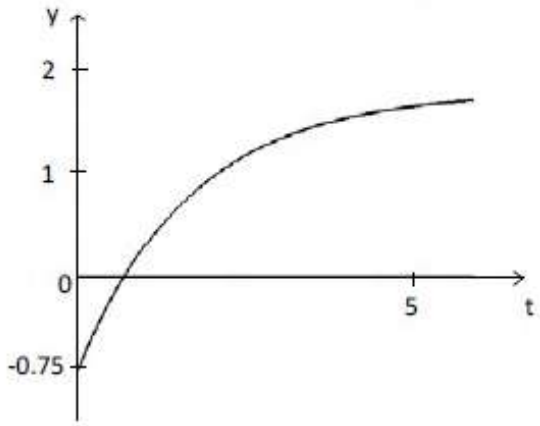

(D)

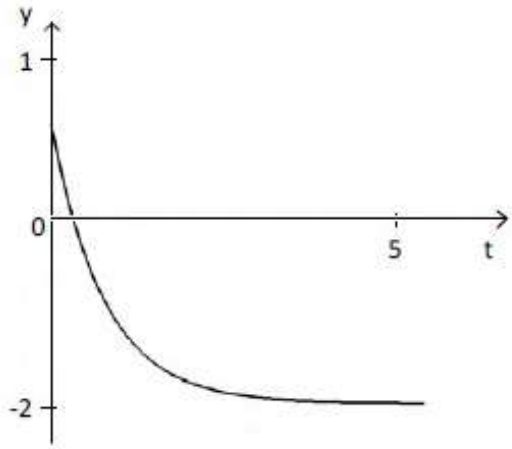

Options :

1. ✔ A
2. ✖ B
3. ✖ C
4. ✖ D

Question Number : 64 Question Type : MCQ

An open loop transfer function G(s) of a system is

$$G(s) = \frac{K}{s(s+1)(s+2)}$$

For a unity feedback system, the breakaway point of the root loci on the real axis occurs at,

(A) -0.42
(B) -1.58
(C) -0.42 and -1.58
(D) none of the above

Options :

1. ✔ A
2. ✖ B
3. ✖ C
4. ✖ D

Question Number : 65 Question Type : MCQ

For the system governed by the set of equations:

$$dx_1/dt = 2x_1 + x_2 + u$$
$$dx_2/dt = -2x_1 + u$$
$$y = 3x_1$$

the transfer function Y(s)/U(s) is given by

(A) $3(s+1)/(s^2 - 2s + 2)$

(B) $3(2s+1)/(s^2 - 2s + 1)$

(C) $(s+1)/(s^2 - 2s + 1)$

(D) $3(2s+1)/(s^2 - 2s + 2)$

Options :

1. ✔ A
2. ✖ B
3. ✖ C
4. ✖ D