# Graduate Aptitude Test in Engineering 2017

**Question Paper Name:** Electrical Engineering 11th Feb 2017 session 2
**Subject Name:** Electrical Engineering
**Duration:** 180
**Total Marks:** 100

## Organizing Institute:
## Indian Institute of Technology Roorkee

**Question Number : 1** **Correct : 1 Wrong : -0.33**

An urn contains 5 red balls and 5 black balls. In the first draw, one ball is picked at random and discarded without noticing its colour. The probability to get a red ball in the second draw is

(A) $\frac{1}{2}$ (B) $\frac{4}{9}$ (C) $\frac{5}{9}$ (D) $\frac{6}{9}$

**Question Number : 2** **Correct : 1 Wrong : -0.33**

Consider a solid sphere of radius 5 cm made of a perfect electric conductor. If one million electrons are added to this sphere, these electrons will be distributed

(A) uniformly over the entire volume of the sphere
(B) uniformly over the outer surface of the sphere
(C) concentrated around the centre of the sphere
(D) along a straight line passing through the centre of the sphere

**Question Number : 3** **Correct : 1 Wrong : -0.33**

The figures show diagramatic representations of vector fields $\vec{X}$, $\vec{Y}$, and $\vec{Z}$, respectively. Which one of the following choices is true?

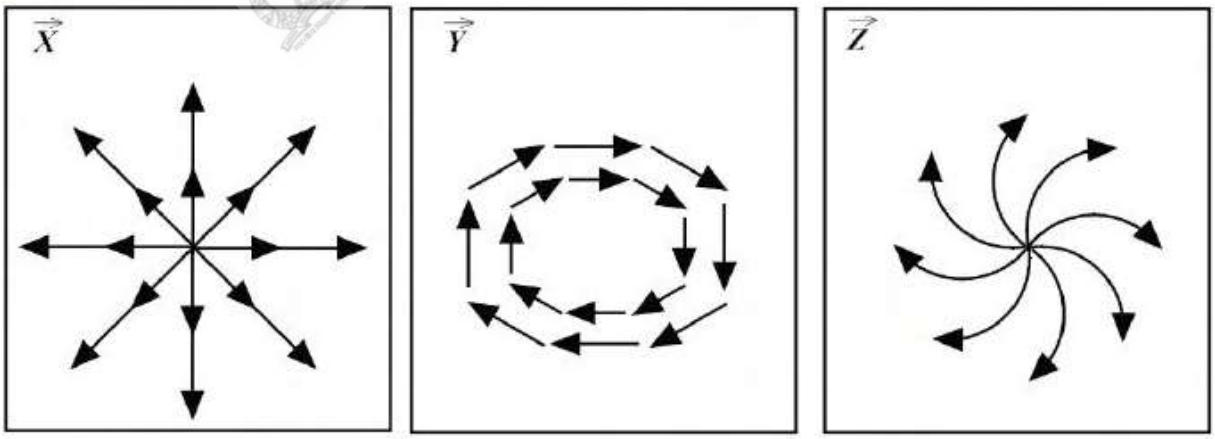


(A) $\nabla.\vec{X} = 0, \nabla \times \vec{Y} \neq 0, \nabla \times \vec{Z} = 0$
(B) $\nabla.\vec{X} \neq 0, \nabla \times \vec{Y} = 0, \nabla \times \vec{Z} \neq 0$
(C) $\nabla.\vec{X} \neq 0, \nabla \times \vec{Y} \neq 0, \nabla \times \vec{Z} \neq 0$
(D) $\nabla.\vec{X} = 0, \nabla \times \vec{Y} = 0, \nabla \times \vec{Z} = 0$

**Question Number : 4** **Correct : 1 Wrong : -0.33**

The pole-zero plots of three discrete-time systems **P**, **Q** and **R** on the $z$-plane are shown below.

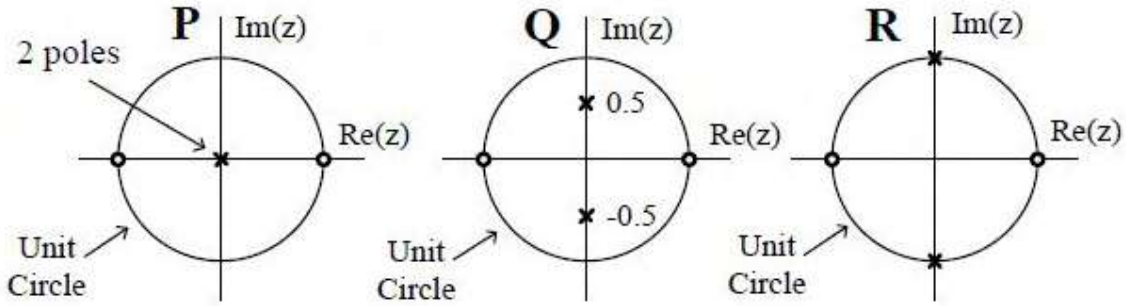


Which one of the following is TRUE about the frequency selectivity of these systems?

(A) All three are high-pass filters.
(B) All three are band-pass filters.
(C) All three are low-pass filters.
(D) **P** is a low-pass filter, **Q** is a band-pass filter and **R** is a high-pass filter.

**Question Number : 5** **Correct : 1 Wrong : -0.33**

If a synchronous motor is running at a leading power factor, its excitation induced voltage ($E_f$) is

(A) equal to terminal voltage $V_t$
(B) higher than the terminal voltage $V_t$
(C) less than terminal voltage $V_t$
(D) dependent upon supply voltage $V_t$

**Question Number : 6** **Correct : 1 Wrong : -0.33**

When a unit ramp input is applied to the unity feedback system having closed loop transfer function $\frac{C(s)}{R(s)} = \frac{Ks+b}{s^2+as+b}$, $(a>0, b>0, K>0)$, the steady state error will be

(A) 0 (B) $\frac{a}{b}$ (C) $\frac{a+K}{b}$ (D) $\frac{a-K}{b}$

## Question Number : 7 Correct : 1 Wrong : -0.33

The transfer function $C(s)$ of a compensator is given below.

$$C(s) = \frac{\left(1+\frac{s}{0.1}\right)\left(1+\frac{s}{100}\right)}{(1+s)\left(1+\frac{s}{10}\right)}$$

The frequency range in which the phase (lead) introduced by the compensator reaches the maximum is

(A) $0.1 < \omega < 1$ (B) $1 < \omega < 10$ (C) $10 < \omega < 100$ (D) $\omega > 100$

## Question Number : 8 Correct : 1 Wrong : -0.33

Two resistors with nominal resistance values $R_1$ and $R_2$ have additive uncertainties $\Delta R_1$ and $\Delta R_2$, respectively. When these resistances are connected in parallel, the standard deviation of the error in the equivalent resistance $R$ is

(A) $\pm\sqrt{\left\{\frac{\partial R}{\partial R_1}\Delta R_1\right\}^2 + \left\{\frac{\partial R}{\partial R_2}\Delta R_2\right\}^2}$ (B) $\pm\sqrt{\left\{\frac{\partial R}{\partial R_2}\Delta R_1\right\}^2 + \left\{\frac{\partial R}{\partial R_1}\Delta R_2\right\}^2}$

(C) $\pm\sqrt{\left\{\frac{\partial R}{\partial R_1}\right\}^2 \Delta R_2 + \left\{\frac{\partial R}{\partial R_2}\right\}^2 \Delta R_1}$ (D) $\pm\sqrt{\left\{\frac{\partial R}{\partial R_1}\right\}^2 \Delta R_1 + \left\{\frac{\partial R}{\partial R_2}\right\}^2 \Delta R_2}$

## Question Number : 9 Correct : 1 Wrong : -0.33

A stationary closed Lissajous pattern on an oscilloscope has 3 horizontal tangencies and 2 vertical tangencies for a horizontal input with frequency 3 kHz. The frequency of the vertical input is

(A) 1.5 kHz (B) 2 kHz (C) 3 kHz (D) 4.5 kHz

**Question Number : 10** **Correct : 1 Wrong : -0.33**

For a 3-input logic circuit shown below, the output $Z$ can be expressed as

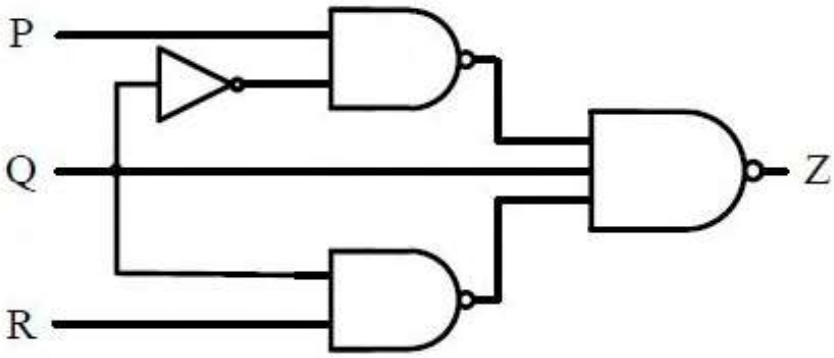


(A) $Q+\overline{R}$

(B) $P\overline{Q}+R$

(C) $\overline{Q}+R$

(D) $P+\overline{Q}+R$

**Question Number : 11** **Correct : 1 Wrong : -0.33**

A phase-controlled, single-phase, full-bridge converter is supplying a highly inductive DC load. The converter is fed from a 230 V, 50 Hz, AC source. The fundamental frequency in Hz of the voltage ripple on the DC side is

(A) 25 (B) 50 (C) 100 (D) 300

**Question Number : 12** **Correct : 1 Wrong : -0.33**

In the circuit shown, the diodes are ideal, the inductance is small, and $I_0 \neq 0$. Which one of the following statements is true?

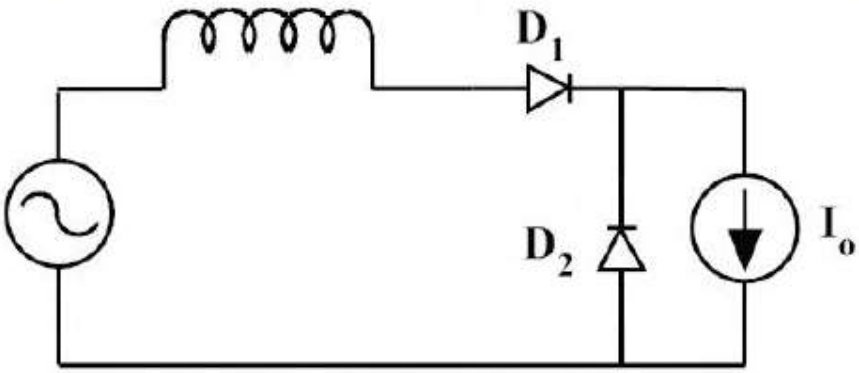


(A) $D_1$ conducts for greater than 180° and $D_2$ conducts for greater than 180°.
(B) $D_2$ conducts for more than 180° and $D_1$ conducts for 180°.
(C) $D_1$ conducts for 180° and $D_2$ conducts for 180°.
(D) $D_1$ conducts for more than 180° and $D_2$ conducts for 180°.

## Question Number : 13 Correct : 1 Wrong : -0.33

A three-phase voltage source inverter with ideal devices operating in 180° conduction mode is feeding a balanced star-connected resistive load. The DC voltage input is $V_{dc}$. The peak of the fundamental component of the phase voltage is

(A) $\frac{V_{dc}}{\pi}$ (B) $\frac{2V_{dc}}{\pi}$ (C) $\frac{3V_{dc}}{\pi}$ (D) $\frac{4V_{dc}}{\pi}$

## Question Number : 14 Correct : 1 Wrong : -0.33

A 3-phase, 4-pole, 400 V, 50 Hz squirrel-cage induction motor is operating at a slip of 0.02. The speed of the rotor flux in mechanical rad/sec, sensed by a stationary observer, is closest to

(A) 1500
(B) 1470
(C) 157
(D) 154

## Question Number : 15 Correct : 1 Wrong : -0.33

The figure shows the per-phase representation of a phase-shifting transformer connected between buses 1 and 2, where $\alpha$ is a complex number with non-zero real and imaginary parts.

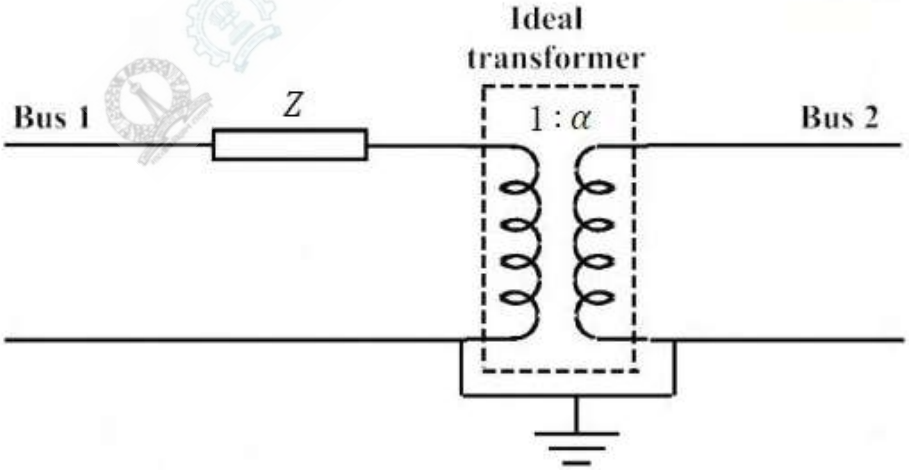


For the given circuit, $Y_{bus}$ and $Z_{bus}$ are bus admittance matrix and bus impedance matrix, respectively, each of size $2 \times 2$. Which one of the following statements is true?

(A) Both $Y_{bus}$ and $Z_{bus}$ are symmetric
(B) $Y_{bus}$ is symmetric and $Z_{bus}$ is unsymmetric
(C) $Y_{bus}$ is unsymmetric and $Z_{bus}$ is symmetric
(D) Both $Y_{bus}$ and $Z_{bus}$ are unsymmetric

**Question Number : 16** **Correct : 1 Wrong : 0**

The figure below shows the circuit diagram of a controlled rectifier supplied from a 230 V, 50 Hz, 1-phase voltage source and a 10:1 ideal transformer. Assume that all devices are ideal. The firing angles of the thyristors $T_1$ and $T_2$ are $90^\circ$ and $270^\circ$, respectively.

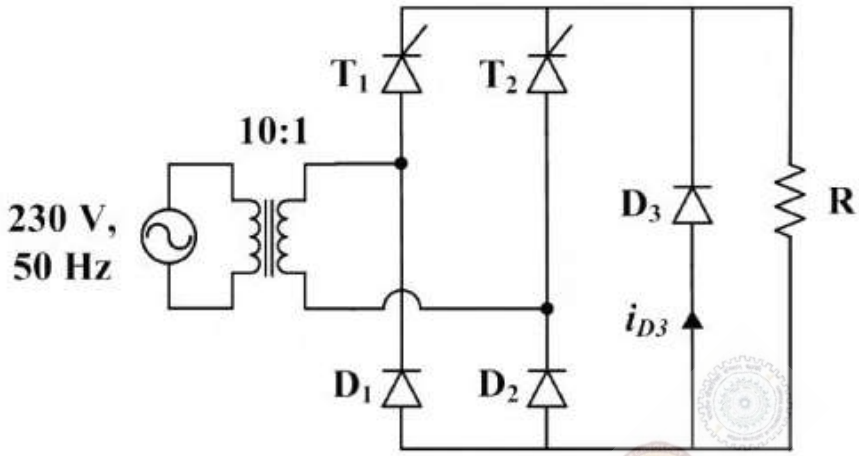


The RMS value of the current through diode $D_3$ in amperes is _____

**Question Number : 17** **Correct : 1 Wrong : 0**

Assume that in a traffic junction, the cycle of the traffic signal lights is 2 minutes of green (vehicle does not stop) and 3 minutes of red (vehicle stops). Consider that the arrival time of vehicles at the junction is uniformly distributed over 5 minute cycle. The expected waiting time (in minutes) for the vehicle at the junction is _____

**Question Number : 18** **Correct : 1 Wrong : 0**

Consider a function $f(x,y,z)$ given by

$$f(x,y,z) = (x^2 + y^2 - 2z^2)(y^2 + z^2)$$

The partial derivative of this function with respect to $x$ at the point, $x = 2$, $y = 1$ and $z = 3$ is _____.

**Question Number : 19** **Correct : 1 Wrong : 0**

Let $x$ and $y$ be integers satisfying the following equations

$$2x^2 + y^2 = 34$$
$$x + 2y = 11$$

The value of $(x + y)$ is _____.

**Question Number : 20** **Correct : 1 Wrong : 0**

Let $y^2 - 2y + 1 = x$ and $\sqrt{x} + y = 5$. The value of $x + \sqrt{y}$ equals _____. (Give the answer up to three decimal places)

**Question Number : 21** **Correct : 1 Wrong : 0**

For the given 2-port network, the value of transfer impedance $z_{21}$ in ohms is _____

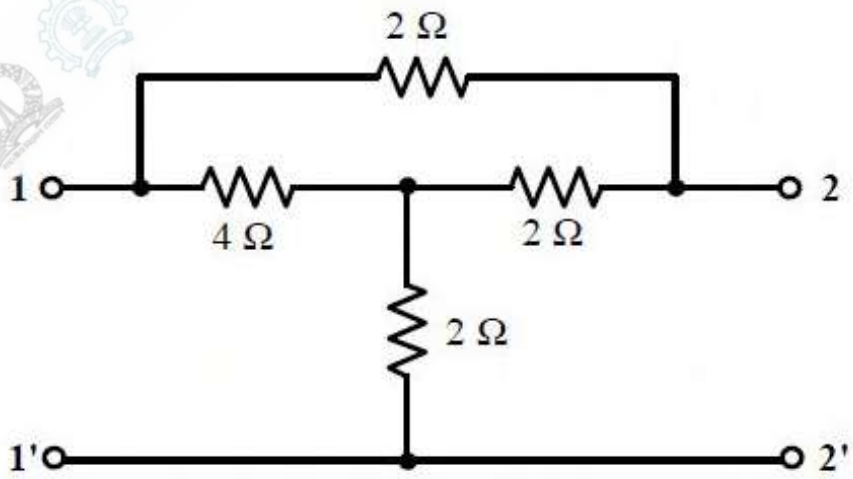

**Question Number : 22** **Correct : 1 Wrong : 0**

The initial charge in the 1 F capacitor present in the circuit shown is zero. The energy in joules transferred from the DC source until steady state condition is reached equals _____. (Give the answer up to one decimal place.)

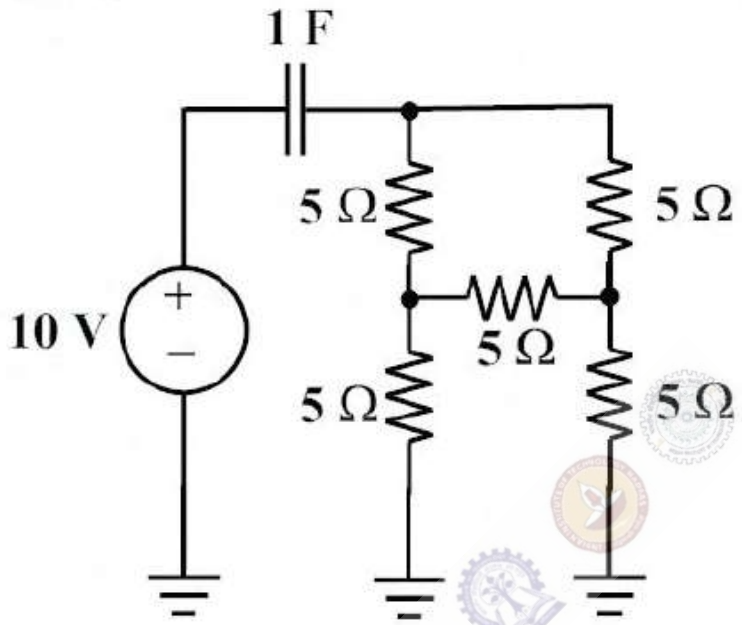


**Question Number : 23** **Correct : 1 Wrong : 0**

The mean square value of the given periodic waveform $f(t)$ is _____

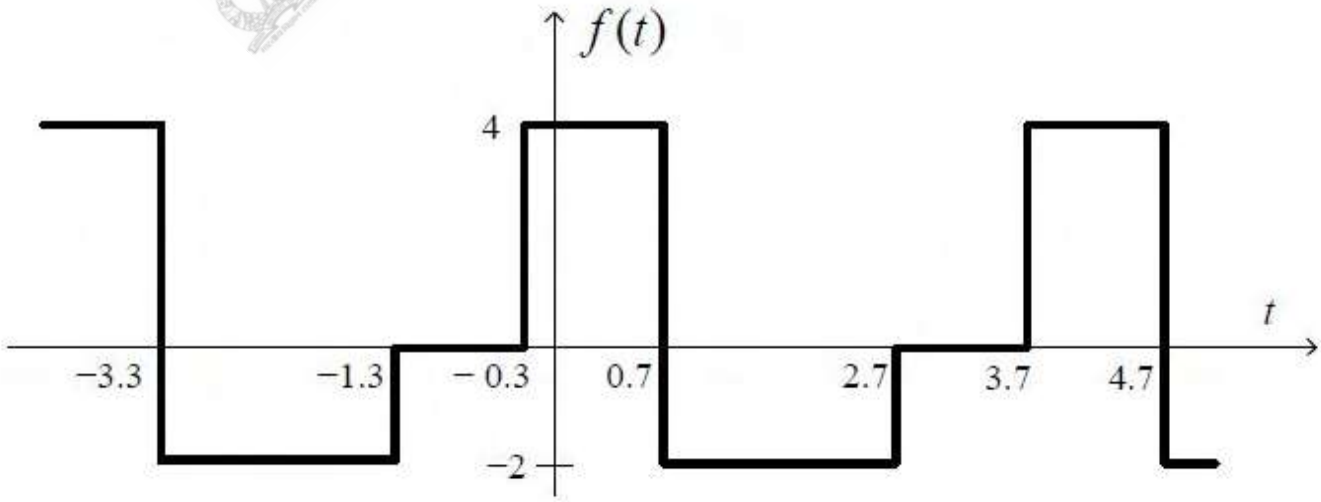

**Question Number : 24** **Correct : 1 Wrong : 0**

The nominal-π circuit of a transmission line is shown in the figure.

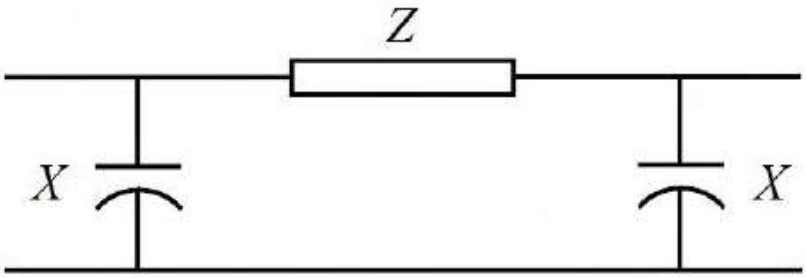


Impedance $Z = 100\angle 80^\circ\ \Omega$ and reactance $X = 3300\ \Omega$. The magnitude of the characteristic impedance of the transmission line, in $\Omega$, is _____. (Give the answer up to one decimal place.)

**Question Number : 25** **Correct : 1 Wrong : 0**

In a load flow problem solved by Newton-Raphson method with polar coordinates, the size of the Jacobian is $100 \times 100$. If there are 20 PV buses in addition to PQ buses and a slack bus, the total number of buses in the system is _____.

**Question Number : 26** **Correct : 2 Wrong : -0.66**

Let $g(x) = \begin{cases} -x, & x \le 1 \\ x+1, & x \ge 1 \end{cases}$ and $f(x) = \begin{cases} 1-x, & x \le 0 \\ x^2, & x > 0 \end{cases}$.

Consider the composition of $f$ and $g$, i.e., $(f \circ g)(x) = f(g(x))$. The number of discontinuities in $(f \circ g)(x)$ present in the interval $(-\infty, 0)$ is:

(A) 0 (B) 1 (C) 2 (D) 4

**Question Number : 27** **Correct : 2 Wrong : -0.66**

The value of the contour integral in the complex-plane

$$\oint \frac{z^3 - 2z + 3}{z - 2} dz$$

along the contour $|z| = 3$, taken counter-clockwise is

(A) $-18\pi i$ (B) 0 (C) $14\pi i$ (D) $48\pi i$

**Question Number : 28** **Correct : 2 Wrong : -0.66**

The eigenvalues of the matrix given below are

$$\begin{bmatrix} 0 & 1 & 0 \\ 0 & 0 & 1 \\ 0 & -3 & -4 \end{bmatrix}$$

(A) (0,-1,-3) (B) (0, -2, -3) (C) (0, 2, 3) (D) (0, 1, 3)

**Question Number : 29** **Correct : 2 Wrong : -0.66**

For the balanced Y-Y connected 3-phase circuit shown in the figure below, the line-line voltage is 208 V rms and the total power absorbed by the load is 432 W at a power factor of 0.6 leading.

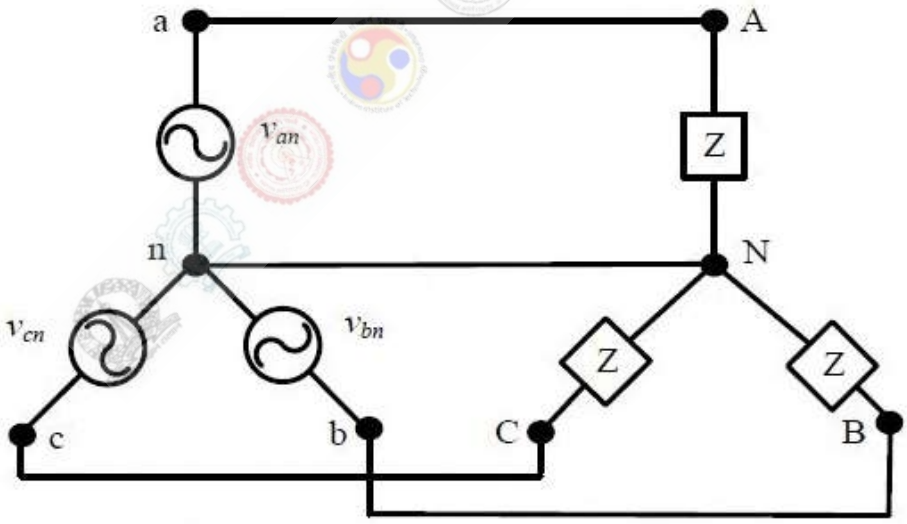


The approximate value of the impedance $Z$ is

(A) $33\angle -53.1^\circ\ \Omega$ (B) $60\angle 53.1^\circ\ \Omega$

(C) $60\angle -53.1^\circ\ \Omega$ (D) $180\angle -53.1^\circ\ \Omega$

**Question Number : 30** **Correct : 2 Wrong : -0.66**

In the circuit shown below, the value of capacitor C required for maximum power to be transferred to the load is

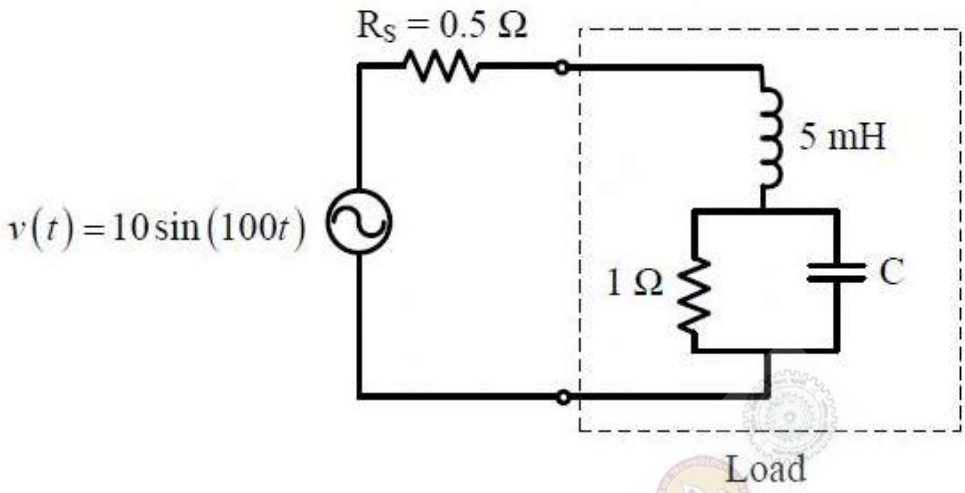


(A) 1 nF (B) 1 μF (C) 1 mF (D) 10 mF

**Question Number : 31** **Correct : 2 Wrong : -0.66**

The output $y(t)$ of the following system is to be sampled, so as to reconstruct it from its samples uniquely. The required minimum sampling rate is

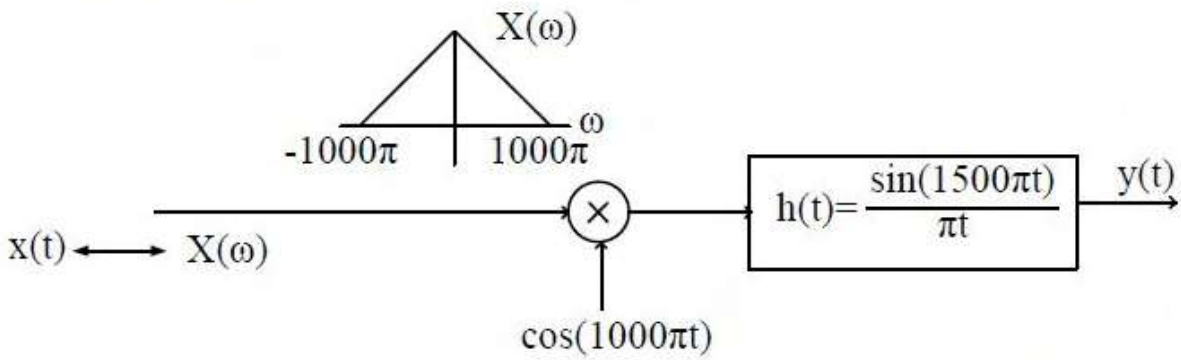


(A) 1000 samples/s (B) 1500 samples/s (C) 2000 samples/s (D) 3000 samples/s

**Question Number : 32** **Correct : 2 Wrong : -0.66**

A cascade system having the impulse responses $h_1(n) = \{\underset{\uparrow}{1}, -1\}$ and $h_2(n) = \{\underset{\uparrow}{1}, 1\}$ is shown in the figure below, where symbol $\uparrow$ denotes the time origin.

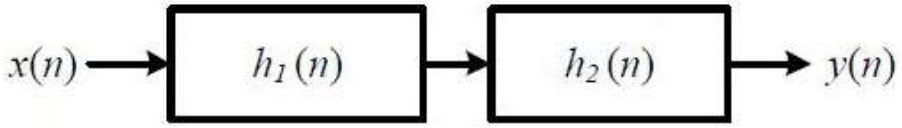


The input sequence $x(n)$ for which the cascade system produces an output sequence $y(n) = \{\underset{\uparrow}{1}, 2, 1, -1, -2, -1\}$ is

(A) $x(n) = \{\underset{\uparrow}{1}, 2, 1, 1\}$

(B) $x(n) = \{\underset{\uparrow}{1}, 1, 2, 2\}$

(C) $x(n) = \{\underset{\uparrow}{1}, 1, 1, 1\}$

(D) $x(n) = \{\underset{\uparrow}{1}, 2, 2, 1\}$

**Question Number : 33** **Correct : 2 Wrong : -0.66**

A 220 V, 10 kW, 900 rpm separately excited DC motor has an armature resistance $R_a = 0.02\,\Omega$. When the motor operates at rated speed and with rated terminal voltage, the electromagnetic torque developed by the motor is 70 Nm. Neglecting the rotational losses of the machine, the current drawn by the motor from the 220 V supply is

(A) 34.2 A
(B) 30 A
(C) 22 A
(D) 4.84 A

**Question Number : 34** **Correct : 2 Wrong : -0.66**

The root locus of the feedback control system having the characteristic equation $s^2 + 6Ks + 2s + 5 = 0$ where $K > 0$, enters into the real axis at

(A) $s = -1$

(B) $s = -\sqrt{5}$

(C) $s = -5$

(D) $s = \sqrt{5}$

**Question Number : 35** **Correct : 2 Wrong : -0.66**

The range of $K$ for which all the roots of the equation $s^3 + 3s^2 + 2s + K = 0$ are in the left half of the complex s-plane is

(A) $0 < K < 6$
(B) $0 < K < 16$
(C) $6 < K < 36$
(D) $6 < K < 16$

**Question Number : 36** **Correct : 2 Wrong : -0.66**

Which of the following systems has maximum peak overshoot due to a unit step input?

(A) $\frac{100}{s^2+10s+100}$

(B) $\frac{100}{s^2+15s+100}$

(C) $\frac{100}{s^2+5s+100}$

(D) $\frac{100}{s^2+20s+100}$

**Question Number : 37** **Correct : 2 Wrong : -0.66**

For the circuit shown in the figure below, it is given that $V_{CE} = \frac{V_{CC}}{2}$. The transistor has $\beta = 29$ and $V_{BE} = 0.7$ V when the B-E junction is forward biased.

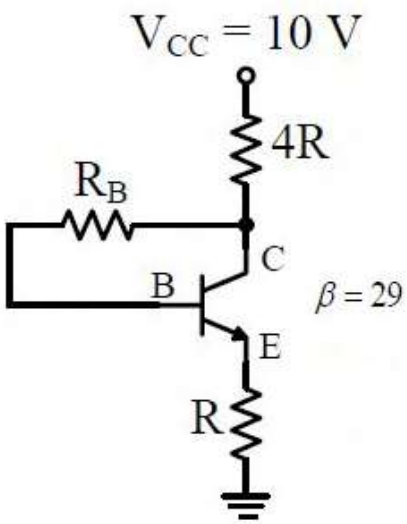


For this circuit, the value of $\frac{R_B}{R}$ is

(A) 43 (B) 92 (C) 121 (D) 129

**Question Number : 38** **Correct : 2 Wrong : -0.66**

For the circuit shown below, assume that the OPAMP is ideal.

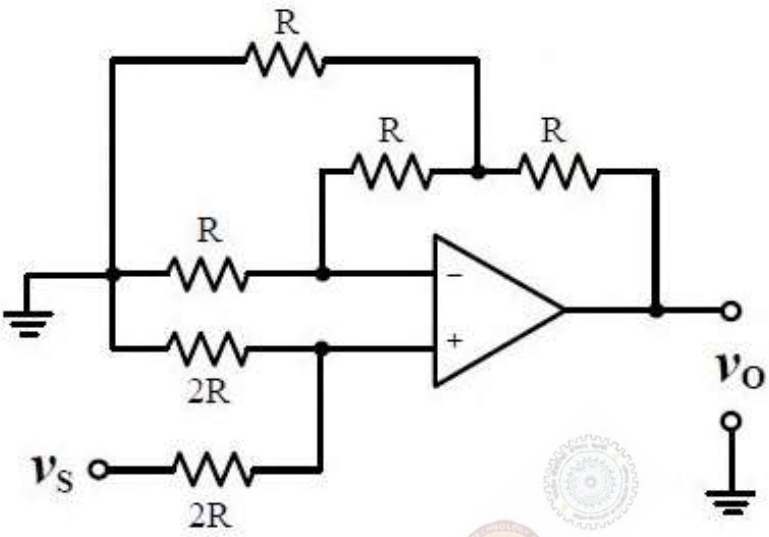


Which one of the following is TRUE?

(A) $v_O = v_S$

(B) $v_O = 1.5\, v_S$

(C) $v_O = 2.5\, v_S$

(D) $v_O = 5\, v_S$

**Question Number : 39** **Correct : 2 Wrong : -0.66**

The figure below shows a half-bridge voltage source inverter supplying an RL-load with $R = 40\ \Omega$ and $L = \left(\frac{0.3}{\pi}\right)$ H. The desired fundamental frequency of the load voltage is 50 Hz. The switch control signals of the converter are generated using sinusoidal pulse width modulation with modulation index, $M = 0.6$. At 50 Hz, the RL-load draws an active power of 1.44 kW. The value of DC source voltage $V_{DC}$ in volts is

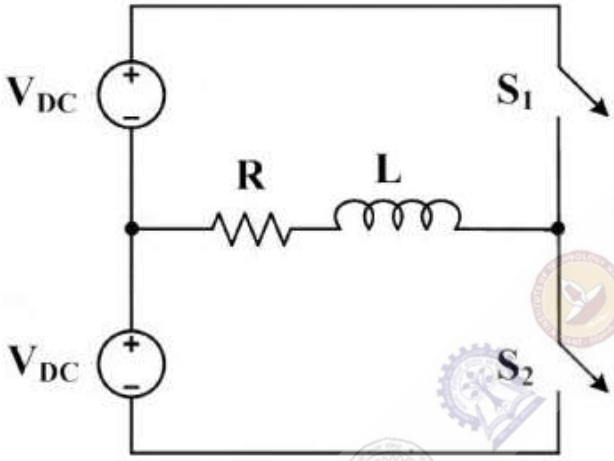


(A) $300\sqrt{2}$
(B) 500
(C) $500\sqrt{2}$
(D) $1000\sqrt{2}$

**Question Number : 40** **Correct : 2 Wrong : -0.66**

A person decides to toss a fair coin repeatedly until he gets a head. He will make at most 3 tosses. Let the random variable $Y$ denote the number of heads. The value of var$\{Y\}$, where var$\{\cdot\}$ denotes the variance, equals

(A) $\frac{7}{8}$ (B) $\frac{49}{64}$ (C) $\frac{7}{64}$ (D) $\frac{105}{64}$

**Question Number : 41** **Correct : 2 Wrong : -0.66**

For the network given in figure below, the Thevenin's voltage $V_{ab}$ is

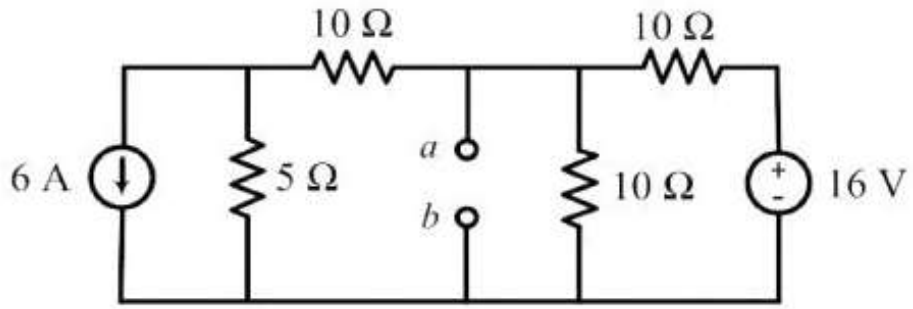


(A) -1.5 V (B) - 0.5 V (C) 0.5 V (D) 1.5 V

**Question Number : 42** **Correct : 2 Wrong : 0**

A 120 V DC shunt motor takes 2 A at no load. It takes 7 A on full load while running at 1200 rpm. The armature resistance is 0.8 Ω, and the shunt field resistance is 240 Ω. The no load speed, in rpm, is _____.

**Question Number : 43** **Correct : 2 Wrong : 0**

A star-connected, 12.5kW, 208 V (line), 3-phase, 60 Hz squirrel cage induction motor has following equivalent circuit parameters per phase referred to the stator: $R_1$=0.3Ω, $R_2$=0.3Ω, $X_1$=0.41Ω, $X_2$=0.41Ω. Neglect shunt branch in the equivalent circuit. The starting current (in Ampere) for this motor when connected to an 80 V (line), 20 Hz, 3-phase AC source is _____.

**Question Number : 44** **Correct : 2 Wrong : 0**

A 25 kVA, 400 V, Δ-connected, 3-phase, cylindrical rotor synchronous generator requires a field current of 5 A to maintain the rated armature current under short-circuit condition. For the same field current, the open-circuit voltage is 360 V. Neglecting the armature resistance and magnetic saturation, its voltage regulation (in % with respect to terminal voltage), when the generator delivers the rated load at 0.8 pf leading, at rated terminal voltage is _____.

**Question Number : 45** **Correct : 2 Wrong : 0**

If the primary line voltage rating is 3.3 kV (Y side) of a 25 kVA, Y-Δ transformer (the per phase turns ratio is 5:1), then the line current rating of the secondary side (in Ampere) is _____.

**Question Number : 46** **Correct : 2 Wrong : 0**

Consider the system described by the following state space representation

$$\begin{bmatrix} \dot{x}_1(t) \\ \dot{x}_2(t) \end{bmatrix} = \begin{bmatrix} 0 & 1 \\ 0 & -2 \end{bmatrix} \begin{bmatrix} x_1(t) \\ x_2(t) \end{bmatrix} + \begin{bmatrix} 0 \\ 1 \end{bmatrix} u(t)$$

$$y(t) = \begin{bmatrix} 1 & 0 \end{bmatrix} \begin{bmatrix} x_1(t) \\ x_2(t) \end{bmatrix}$$

If $u(t)$ is a unit step input and $\begin{bmatrix} x_1(0) \\ x_2(0) \end{bmatrix} = \begin{bmatrix} 1 \\ 0 \end{bmatrix}$, the value of output $y(t)$ at $t = 1$ sec (rounded off to three decimal places) is _____

**Question Number : 47** **Correct : 2 Wrong : 0**

A 10 ½ digit timer counter possesses a base clock of frequency 100 MHz. When measuring a particular input, the reading obtained is the same in: (i) Frequency mode of operation with a gating time of one second and (ii) Period mode of operation (in the x 10 ns scale). The frequency of the unknown input (reading obtained) in Hz is _____.

**Question Number : 48** **Correct : 2 Wrong : 0**

In the circuit shown in the figure, the diode used is ideal. The input power factor is _____. (Give the answer up to two decimal places.)

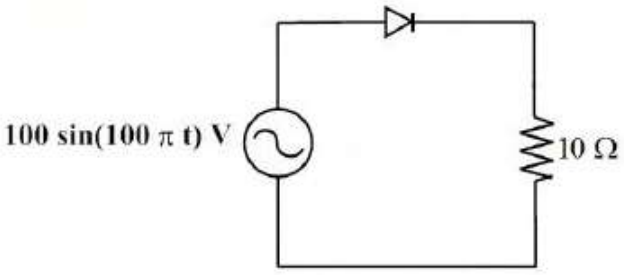

**Question Number : 49** **Correct : 2 Wrong : 0**

For the synchronous sequential circuit shown below, the output Z is zero for the initial conditions $Q_A Q_B Q_C = Q'_A Q'_B Q'_C = 100$.

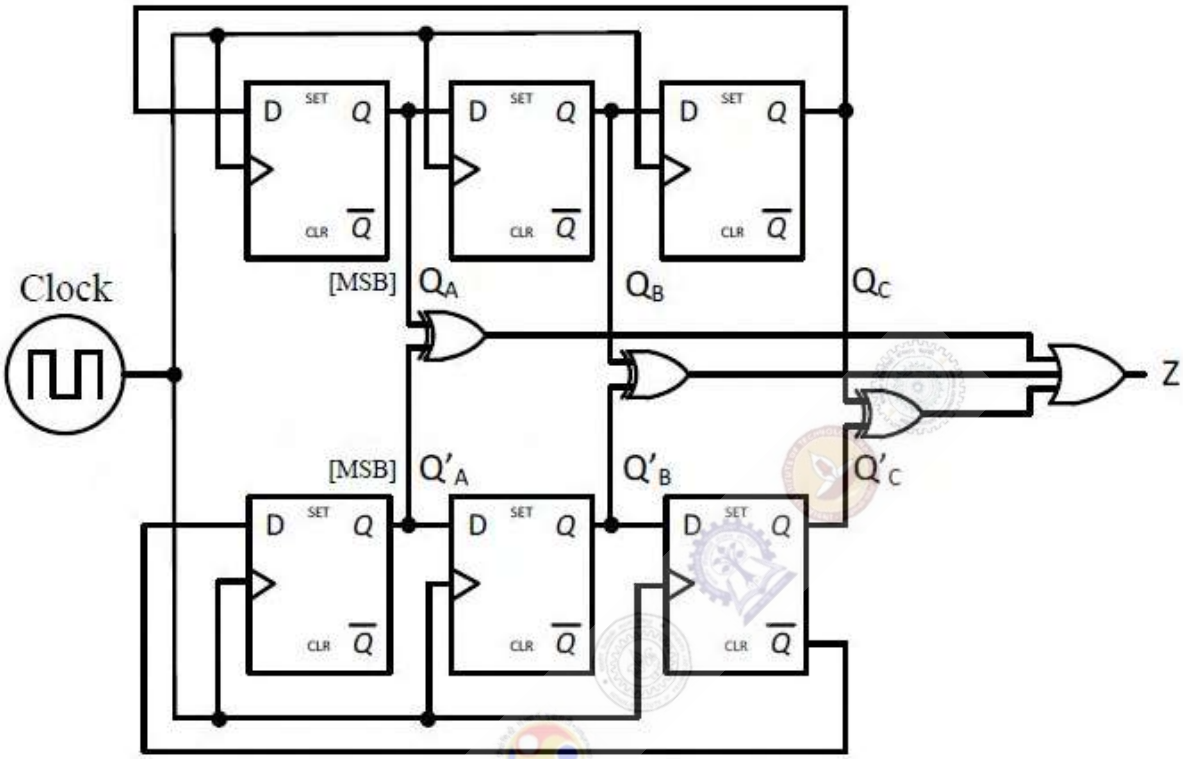


The minimum number of clock cycles after which the output Z would again become zero is _____

## Question Number : 50 Correct : 2 Wrong : 0

In the circuit shown all elements are ideal and the switch S is operated at 10 kHz and 60% duty ratio. The capacitor is large enough so that the ripple across it is negligible and at steady state acquires a voltage as shown. The peak current in amperes drawn from the 50 V DC source is _____. (Give the answer up to one decimal place.)

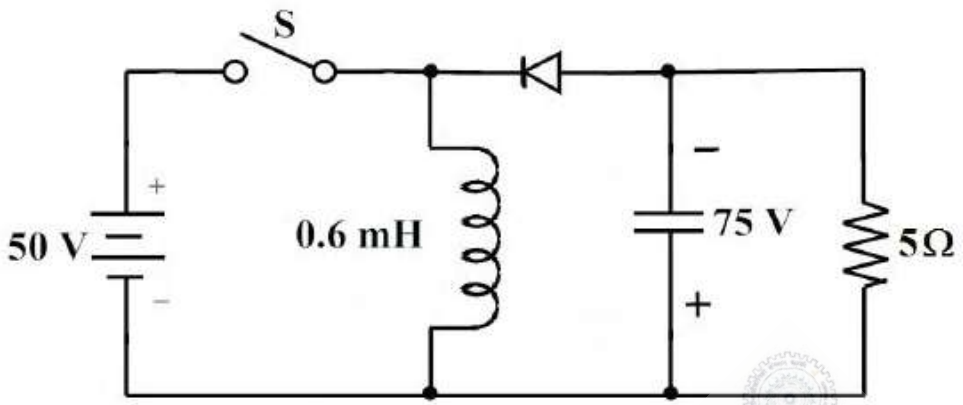


## Question Number : 51 Correct : 2 Wrong : 0

Consider an overhead transmission line with 3-phase, 50 Hz balanced system with conductors located at the vertices of an equilateral triangle of length $D_{ab} = D_{bc} = D_{ca} = 1m$ as shown in figure below. The resistances of the conductors are neglected. The geometric mean radius (GMR) of each conductor is 0.01 m. Neglecting the effect of ground, the magnitude of positive sequence reactance in $\Omega/km$ (rounded off to three decimal places) is _____

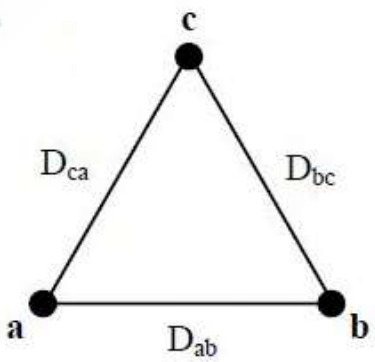


## Question Number : 52 Correct : 2 Wrong : 0

A 3-phase, 50 Hz generator supplies power of 3MW at 17.32 kV to a balanced 3-phase inductive load through an overhead line. The per phase line resistance and reactance are 0.25Ω and 3.925Ω respectively. If the voltage at the generator terminal is 17.87 kV, the power factor of the load is _____.

**Question Number : 53** **Correct : 2 Wrong : 0**

Two generating units rated 300 MW and 400 MW have governor speed regulation of 6% and 4% respectively from no load to full load. Both the generating units are operating in parallel to share a load of 600 MW. Assuming free governor action, the load shared by the larger unit is _____MW.

**Question Number : 54** **Correct : 2 Wrong : 0**

A 3-phase, 2-pole, 50 Hz, synchronous generator has a rating of 250 MVA, 0.8 pf lagging. The kinetic energy of the machine at synchronous speed is 1000 MJ. The machine is running steadily at synchronous speed and delivering 60 MW power at a power angle of 10 electrical degrees. If the load is suddenly removed, assuming the acceleration is constant for 10 cycles, the value of the power angle after 5 cycles is _____electrical degrees.

**Question Number : 55** **Correct : 2 Wrong : 0**

A thin soap bubble of radius $R = 1$ cm, and thickness $a = 3.3\ \mu$m ($a \ll R$), is at a potential of 1 V with respect to a reference point at infinity. The bubble bursts and becomes a single spherical drop of soap (assuming all the soap is contained in the drop) of radius $r$. The volume of the soap in the thin bubble is $4\pi R^2 a$ and that of the drop is $\frac{4}{3}\pi r^3$. The potential in volts, of the resulting single spherical drop with respect to the same reference point at infinity is _____. (Give the answer up to two decimal places.)

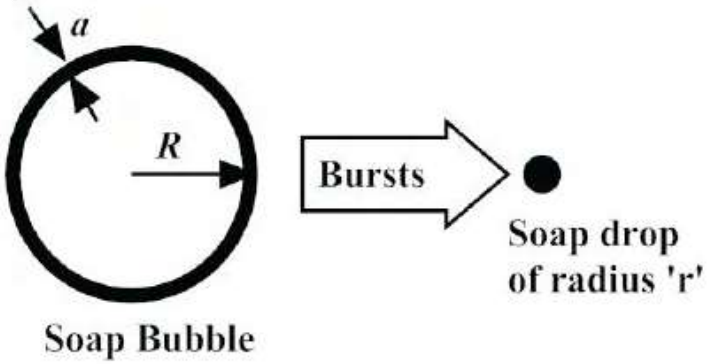

**Question Number : 56** **Correct : 1 Wrong : -0.33**

Choose the option with words that are not synonyms.

(A) aversion, dislike
(B) luminous, radiant
(C) plunder, loot
(D) yielding, resistant

**Question Number : 57** **Correct : 1 Wrong : -0.33**

Saturn is _____ to be seen on a clear night with the naked eye.

(A) enough bright
(B) bright enough
(C) as enough bright
(D) bright as enough

**Question Number : 58** **Correct : 1 Wrong : -0.33**

There are five buildings called V, W, X, Y and Z in a row (not necessarily in that order). V is to the West of W. Z is to the East of X and the West of V. W is to the West of Y. Which is the building in the middle?

(A) V
(B) W
(C) X
(D) Y

**Question Number : 59** **Correct : 1 Wrong : -0.33**

A test has twenty questions worth 100 marks in total. There are two types of questions. Multiple choice questions are worth 3 marks each and essay questions are worth 11 marks each. How many multiple choice questions does the exam have?

(A) 12
(B) 15
(C) 18
(D) 19

**Question Number : 60** **Correct : 1 Wrong : -0.33**

There are 3 red socks, 4 green socks and 3 blue socks. You choose 2 socks. The probability that they are of the same colour is

(A) 1/5 (B) 7/30 (C) 1/4 (D) 4/15

**Question Number : 61** **Correct : 2 Wrong : - 0.66**

"We lived in a culture that denied any merit to literary works, considering them important only when they were handmaidens to something seemingly more urgent – namely ideology. This was a country where all gestures, even the most private, were interpreted in political terms."

The author's belief that ideology is not as important as literature is revealed by the word:

(A) 'culture' (B) 'seemingly' (C) 'urgent' (D) 'political'

**Question Number : 62** **Correct : 2 Wrong : -0.66**

There are three boxes. One contains apples, another contains oranges and the last one contains both apples and oranges. All three are known to be incorrectly labelled. If you are permitted to open just one box and then pull out and inspect only one fruit, which box would you open to determine the contents of all three boxes?

(A) The box labelled 'Apples'
(B) The box labelled 'Apples and Oranges'
(C) The box labelled 'Oranges'
(D) Cannot be determined

**Question Number : 63** **Correct : 2 Wrong : -0.66**

X is a 30 digit number starting with the digit 4 followed by the digit 7. Then the number $X^3$ will have

(A) 90 digits (B) 91 digits (C) 92 digits (D) 93 digits

**Question Number : 64** **Correct : 2 Wrong : -0.66**

The number of roots of $e^x + 0.5x^2 - 2 = 0$ in the range $[-5, 5]$ is

(A) 0 (B) 1 (C) 2 (D) 3

**Question Number : 65** **Correct : 2 Wrong : -0.66**

An air pressure contour line joins locations in a region having the same atmospheric pressure. The following is an air pressure contour plot of a geographical region. Contour lines are shown at 0.05 bar intervals in this plot.

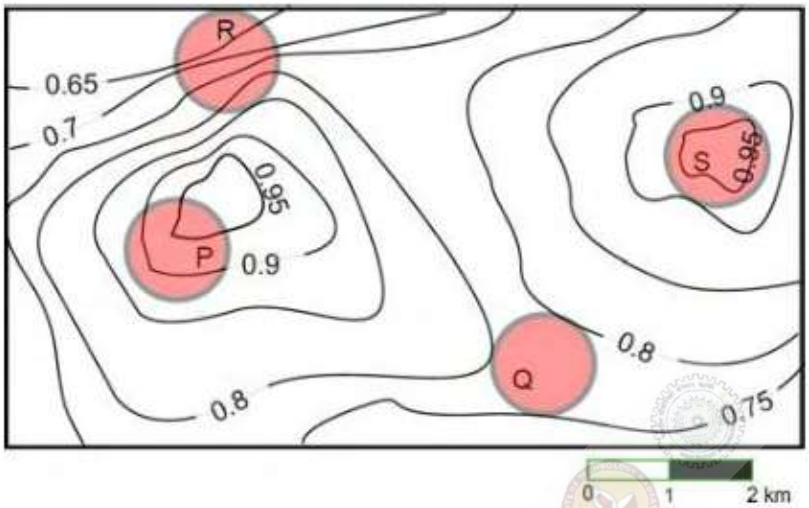


If the possibility of a thunderstorm is given by how fast air pressure rises or drops over a region, which of the following regions is most likely to have a thunderstorm?

(A) P (B) Q (C) R (D) S

| Q. No. | Type | Section | Key | Marks |
|---|---|---|---|---|
| 1 | MCQ | EE-2 | A | 1 |
| 2 | MCQ | EE-2 | B | 1 |
| 3 | MCQ | EE-2 | C | 1 |
| 4 | MCQ | EE-2 | B | 1 |
| 5 | MCQ | EE-2 | B | 1 |
| 6 | MCQ | EE-2 | D | 1 |
| 7 | MCQ | EE-2 | A | 1 |
| 8 | MCQ | EE-2 | A | 1 |
| 9 | MCQ | EE-2 | D | 1 |
| 10 | MCQ | EE-2 | C | 1 |
| 11 | MCQ | EE-2 | C | 1 |
| 12 | MCQ | EE-2 | A | 1 |
| 13 | MCQ | EE-2 | B | 1 |
| 14 | MCQ | EE-2 | C | 1 |
| 15 | MCQ | EE-2 | D | 1 |
| 16 | NAT | EE-2 | 0 to 0 | 1 |
| 17 | NAT | EE-2 | 0.9 to 0.9 | 1 |
| 18 | NAT | EE-2 | 40 to 40 | 1 |
| 19 | NAT | EE-2 | 7 to 7 | 1 |
| 20 | NAT | EE-2 | 5.7 to 5.8 | 1 |
| 21 | NAT | EE-2 | 3 to 3 | 1 |
| 22 | NAT | EE-2 | 99 to 101 | 1 |
| 23 | NAT | EE-2 | 6 to 6 | 1 |
| 24 | NAT | EE-2 | 404 to 409 | 1 |
| 25 | NAT | EE-2 | 61 to 61 | 1 |
| 26 | MCQ | EE-2 | A | 2 |
| 27 | MCQ | EE-2 | C | 2 |
| 28 | MCQ | EE-2 | A | 2 |
| 29 | MCQ | EE-2 | C | 2 |
| 30 | MCQ | EE-2 | D | 2 |
| 31 | MCQ | EE-2 | B | 2 |
| 32 | MCQ | EE-2 | D | 2 |
| 33 | MCQ | EE-2 | B | 2 |
| 34 | MCQ | EE-2 | B | 2 |
| 35 | MCQ | EE-2 | A | 2 |
| 36 | MCQ | EE-2 | C | 2 |

| | | | | |
|---|---|---|---|---|
| **37** | MCQ | EE-2 | D | 2 |
| **38** | MCQ | EE-2 | C | 2 |
| **39** | MCQ | EE-2 | C | 2 |
| **40** | MCQ | EE-2 | C | 2 |
| **41** | MCQ | EE-2 | A | 2 |
| **42** | NAT | EE-2 | 1235 to 1250 | 2 |
| **43** | NAT | EE-2 | 69 to 71 | 2 |
| **44** | NAT | EE-2 | -15 to -14 | 2 |
| **45** | NAT | EE-2 | 37 to 39 | 2 |
| **46** | NAT | EE-2 | 1.280 to 1.287 | 2 |
| **47** | NAT | EE-2 | 10000 to 10000 | 2 |
| **48** | NAT | EE-2 | 0.70 to 0.71 | 2 |
| **49** | NAT | EE-2 | 6 to 6 | 2 |
| **50** | NAT | EE-2 | 39 to 41 | 2 |
| **51** | NAT | EE-2 | 0.271 to 0.301 | 2 |
| **52** | NAT | EE-2 | 0.75 to 0.85 | 2 |
| **53** | NAT | EE-2 | 395 to 405 | 2 |
| **54** | NAT | EE-2 | 12.5 to 12.9 | 2 |
| **55** | NAT | EE-2 | 9.50 to 10.50 | 2 |
| **56** | MCQ | GA | D | 1 |
| **57** | MCQ | GA | B | 1 |
| **58** | MCQ | GA | A | 1 |
| **59** | MCQ | GA | B | 1 |
| **60** | MCQ | GA | D | 1 |
| **61** | MCQ | GA | B | 2 |
| **62** | MCQ | GA | B | 2 |
| **63** | MCQ | GA | A | 2 |
| **64** | MCQ | GA | C | 2 |
| **65** | MCQ | GA | C | 2 |