Q. 1 – Q. 5 carry one mark each.

Q.1 I am not sure if the bus that has been booked will be able to _____ all the students.

(A) sit (B) deteriorate (C) fill (D) accommodate

Q.2 The passengers were angry _____ the airline staff about the delay.

(A) on (B) about (C) with (D) towards

Q.3 The missing number in the given sequence 343, 1331, _____, 4913 is

(A) 3375 (B) 2744 (C) 2197 (D) 4096

Q.4 It takes two hours for a person X to mow the lawn. Y can mow the same lawn in four hours. How long (in minutes) will it take X and Y, if they work together to mow the lawn?

(A) 60 (B) 80 (C) 90 (D) 120

Q.5 Newspapers are a constant source of delight and recreation for me. The ____ trouble is that I read ____ many of them.

(A) even, quite (B) even, too
(C) only, quite (D) only, too

Q. 6 – Q. 10 carry two marks each.

Q.6 How many integers are there between 100 and 1000 all of whose digits are even?

(A) 60 (B) 80 (C) 100 (D) 90

Q.7 The ratio of the number of boys and girls who participated in an examination is 4:3. The total percentage of candidates who passed the examination is 80 and the percentage of girls who passed is 90. The percentage of boys who passed is _____.

(A) 55.50 (B) 72.50 (C) 80.50 (D) 90.00

Q.8 An award-winning study by a group of researchers suggests that men are as prone to buying on impulse as women but women feel more guilty about shopping.

Which one of the following statements can be inferred from the given text?

(A) Some men and women indulge in buying on impulse
(B) All men and women indulge in buying on impulse
(C) Few men and women indulge in buying on impulse
(D) Many men and women indulge in buying on impulse

Q.9 Given two sets X = {1, 2, 3} and Y = {2, 3, 4}, we construct a set Z of all possible fractions where the numerators belong to set X and the denominators belong to set Y. The product of elements having minimum and maximum values in the set Z is ____.

(A) 1/12 (B) 1/8 (C) 1/6 (D) 3/8

Q.10 Consider five people – Mita, Ganga, Rekha, Lakshmi and Sana. Ganga is taller than both Rekha and Lakshmi. Lakshmi is taller than Sana. Mita is taller than Ganga.
Which of the following conclusions are true?

1. Lakshmi is taller than Rekha
2. Rekha is shorter than Mita
3. Rekha is taller than Sana
4. Sana is shorter than Ganga

(A) 1 and 3
(B) 3 only
(C) 2 and 4
(D) 1 only

END OF THE QUESTION PAPER

Q. 1 – Q. 25 carry ONE mark each.

Q.1 The inverse Laplace transform of $H(s) = \frac{s+3}{s^2+2s+1}$ for $t \geq 0$ is

(A) $3te^{-t} + e^{-t}$
(B) $3e^{-t}$
(C) $2te^{-t} + e^{-t}$
(D) $4te^{-t} + e^{-t}$

Q.2 M is a 2×2 matrix with eigenvalues 4 and 9. The eigenvalues of M^2 are

(A) 4 and 9
(B) 2 and 3
(C) -2 and -3
(D) 16 and 81

Q.3 The partial differential equation
$\frac{\partial^2 u}{\partial t^2} - c^2\left(\frac{\partial^2 u}{\partial x^2} + \frac{\partial^2 u}{\partial y^2}\right) = 0$; where $c \neq 0$

is known as

(A) heat equation
(B) wave equation
(C) Poisson's equation
(D) Laplace equation

Q.4 Which one of the following functions is analytic in the region $|z| \leq 1$?

(A) $\frac{z^2-1}{z}$
(B) $\frac{z^2-1}{z+2}$
(C) $\frac{z^2-1}{z-0.5}$
(D) $\frac{z^2-1}{z+j0.5}$

Q.5 The mean-square of a zero-mean random process is $\frac{kT}{C}$, where k is Boltzmann's constant, T is the absolute temperature, and C is a capacitance. The standard deviation of the random process is

(A) $\frac{kT}{C}$
(B) $\sqrt{\frac{kT}{C}}$
(C) $\frac{C}{kT}$
(D) $\frac{\sqrt{kT}}{C}$

Q.6 A system transfer function is $H(s) = \frac{a_1 s^2 + b_1 s + c_1}{a_2 s^2 + b_2 s + c_2}$. If $a_1 = b_1 = 0$, and all other coefficients are positive, the transfer function represents a

(A) low pass filter
(B) high pass filter
(C) band pass filter
(D) notch filter

Q.7 The symbols, a and T, represent positive quantities, and $u(t)$ is the unit step function. Which one of the following impulse responses is NOT the output of a causal linear time-invariant system?

(A) $e^{+at}u(t)$
(B) $e^{-a(t+T)}u(t)$
(C) $1 + e^{-at}u(t)$
(D) $e^{-a(t-T)}u(t)$

Q.8 A 5 kVA, 50 V/100 V, single-phase transformer has a secondary terminal voltage of 95 V when loaded. The regulation of the transformer is

(A) 4.5%
(B) 9%
(C) 5%
(D) 1%

Q.9 A six-pulse thyristor bridge rectifier is connected to a balanced three-phase, 50 Hz AC source. Assuming that the DC output current of the rectifier is constant, the lowest harmonic component in the AC input current is

(A) 100 Hz (B) 150 Hz (C) 250 Hz (D) 300 Hz

Q.10 The parameter of an equivalent circuit of a three-phase induction motor affected by reducing the rms value of the supply voltage at the rated frequency is

(A) rotor resistance
(B) rotor leakage reactance
(C) magnetizing reactance
(D) stator resistance

Q.11 A three-phase synchronous motor draws 200 A from the line at unity power factor at rated load. Considering the same line voltage and load, the line current at a power factor of 0.5 leading is

(A) 100 A (B) 200 A (C) 300 A (D) 400 A

Q.12 In the circuit shown below, the switch is closed at $t = 0$. The value of θ in degrees which will give the maximum value of DC offset of the current at the time of switching is

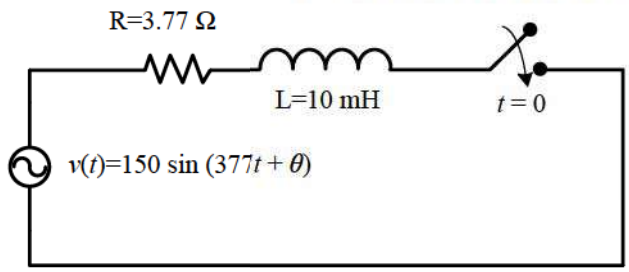

(A) 60 (B) −45 (C) 90 (D) −30

Q.13 The output response of a system is denoted as $y(t)$, and its Laplace transform is given by

$$Y(s) = \frac{10}{s(s^2+s+100\sqrt{2})}.$$

The steady state value of $y(t)$ is

(A) $\frac{1}{10\sqrt{2}}$ (B) $10\sqrt{2}$ (C) $\frac{1}{100\sqrt{2}}$ (D) $100\sqrt{2}$

Q.14 The open loop transfer function of a unity feedback system is given by

$$G(s) = \frac{\pi e^{-0.25s}}{s}.$$

In $G(s)$ plane, the Nyquist plot of $G(s)$ passes through the negative real axis at the point

(A) $(-0.5, j0)$ (B) $(-0.75, j0)$ (C) $(-1.25, j0)$ (D) $(-1.5, j0)$

Q.15 The characteristic equation of a linear time-invariant (LTI) system is given by

$$\Delta(s) = s^4 + 3s^3 + 3s^2 + s + k = 0.$$

The system is BIBO stable if

(A) $0 < k < \frac{12}{9}$ (B) $k > 3$
(C) $0 < k < \frac{8}{9}$ (D) $k > 6$

Q.16 Given, V_{gs} is the gate-source voltage, V_{ds} is the drain source voltage, and V_{th} is the threshold voltage of an enhancement type NMOS transistor, the conditions for transistor to be biased in saturation are

(A) $V_{gs} < V_{th}$; $V_{ds} \geq V_{gs} - V_{th}$
(B) $V_{gs} > V_{th}$; $V_{ds} \geq V_{gs} - V_{th}$
(C) $V_{gs} > V_{th}$; $V_{ds} \leq V_{gs} - V_{th}$
(D) $V_{gs} < V_{th}$; $V_{ds} \leq V_{gs} - V_{th}$

Q.17 A current controlled current source (CCCS) has an input impedance of 10 Ω and output impedance of 100 kΩ. When this CCCS is used in a negative feedback closed loop with a loop gain of 9, the closed loop output impedance is

(A) 10 Ω (B) 100 Ω (C) 100 kΩ (D) 1000 kΩ

Q.18 If $f = 2x^3 + 3y^2 + 4z$, the value of line integral $\int_C \text{grad} f \cdot d\mathbf{r}$ evaluated over contour C formed by the segments (-3, -3, 2)→(2, -3, 2) →(2, 6, 2) →(2, 6, -1) is_____.

Q.19 The current I flowing in the circuit shown below in amperes (round off to one decimal place) is _____.

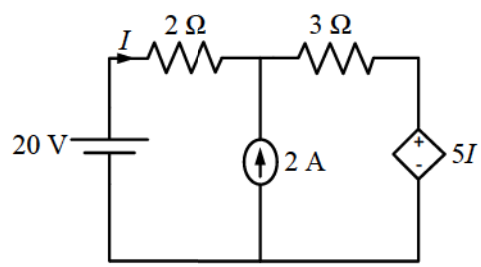

Q.20 A co-axial cylindrical capacitor shown in Figure (i) has dielectric with relative permittivity $\varepsilon_{r1} = 2$. When one-fourth portion of the dielectric is replaced with another dielectric of relative permittivity ε_{r2}, as shown in Figure (ii), the capacitance is doubled. The value of ε_{r2} is _____.

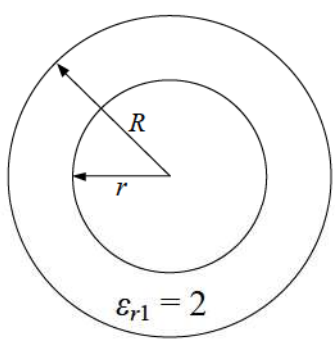

Figure (i)

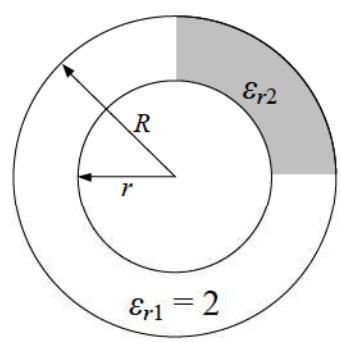

Figure (ii)

Q.21 The Y_{bus} matrix of a two-bus power system having two identical parallel lines connected between them in pu is given as

$$Y_{bus} = \begin{bmatrix} -j8 & j20 \\ j20 & -j8 \end{bmatrix}.$$

The magnitude of the series reactance of each line in pu (round off up to one decimal place) is _____.

Q.22 Five alternators each rated 5 MVA, 13.2 kV with 25% of reactance on its own base are connected in parallel to a busbar. The short-circuit level in MVA at the busbar is_____.

Q.23 The total impedance of the secondary winding, leads, and burden of a 5 A CT is 0.01 Ω. If the fault current is 20 times the rated primary current of the CT, the VA output of the CT is _____.

Q.24 The rank of the matrix, $M = \begin{bmatrix} 0 & 1 & 1 \\ 1 & 0 & 1 \\ 1 & 1 & 0 \end{bmatrix}$, is _____.

Q.25 The output voltage of a single-phase full bridge voltage source inverter is controlled by unipolar PWM with one pulse per half cycle. For the fundamental rms component of output voltage to be 75% of DC voltage, the required pulse width in degrees (round off up to one decimal place) is _____.

Q. 26 – Q. 55 carry TWO marks each.

Q.26 Consider a 2×2 matrix $\boldsymbol{M} = [\boldsymbol{v_1} \quad \boldsymbol{v_2}]$, where, $\boldsymbol{v_1}$ and $\boldsymbol{v_2}$ are the column vectors. Suppose $\boldsymbol{M^{-1}} = \begin{bmatrix} \boldsymbol{u_1^T} \\ \boldsymbol{u_2^T} \end{bmatrix}$, where $\boldsymbol{u_1^T}$ and $\boldsymbol{u_2^T}$ are the row vectors. Consider the following statements:

Statement 1: $\boldsymbol{u_1^T v_1} = \mathbf{1}$ and $\boldsymbol{u_2^T v_2} = \mathbf{1}$

Statement 2: $\boldsymbol{u_1^T v_2} = \mathbf{0}$ and $\boldsymbol{u_2^T v_1} = \mathbf{0}$

Which of the following options is correct?

(A) Statement 1 is true and statement 2 is false
(B) Statement 2 is true and statement 1 is false
(C) Both the statements are true
(D) Both the statements are false

Q.27 The closed loop line integral

$$\oint_{|z|=5} \frac{z^3 + z^2 + 8}{z + 2}\, dz$$

evaluated counter-clockwise, is

(A) $+8j\pi$ (B) $-8j\pi$ (C) $-4j\pi$ (D) $+4j\pi$

Q.28 A periodic function $f(t)$, with a period of 2π, is represented as its Fourier series,

$$f(t) = a_0 + \sum_{n=1}^{\infty} a_n \cos nt + \sum_{n=1}^{\infty} b_n \sin nt.$$

If

$$f(t) = \begin{cases} A \sin t, & 0 \le t \le \pi \\ 0, & \pi < t < 2\pi \end{cases},$$

the Fourier series coefficients a_1 and b_1 of $f(t)$ are

(A) $a_1 = \frac{A}{\pi};\ b_1 = 0$
(B) $a_1 = \frac{A}{2};\ b_1 = 0$
(C) $a_1 = 0\,;\ b_1 = A/\pi$
(D) $a_1 = 0\,;\ b_1 = \frac{A}{2}$

Q.29 The asymptotic Bode magnitude plot of a minimum phase transfer function $G(s)$ is shown below.

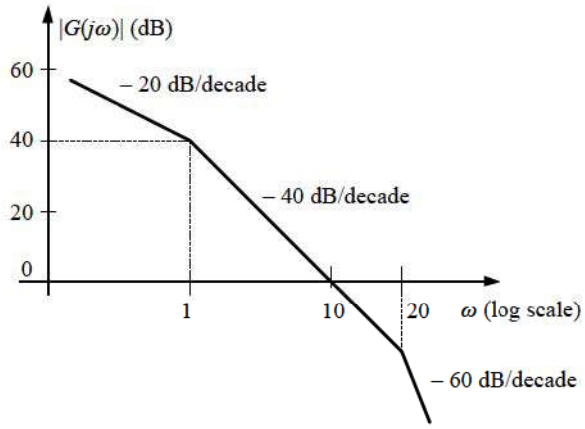

Consider the following two statements.

Statement I: Transfer function $G(s)$ has three poles and one zero.

Statement II: At very high frequency ($\omega \to \infty$), the phase angle $\angle G(j\omega) = -\frac{3\pi}{2}$.

Which one of the following options is correct?

(A) Statement I is true and statement II is false.
(B) Statement I is false and statement II is true.
(C) Both the statements are true.
(D) Both the statements are false.

Q.30 The transfer function of a phase lead compensator is given by

$$D(s) = \frac{3\left(s+\frac{1}{3T}\right)}{\left(s+\frac{1}{T}\right)}.$$

The frequency (in rad/sec), at which $\angle D(j\omega)$ is maximum, is

(A) $\sqrt{\frac{3}{T^2}}$ (B) $\sqrt{\frac{1}{3T^2}}$ (C) $\sqrt{3T}$ (D) $\sqrt{3T^2}$

Q.31 Consider a state-variable model of a system

$$\begin{bmatrix}\dot{x}_1\\ \dot{x}_2\end{bmatrix} = \begin{bmatrix}0 & 1\\ -\alpha & -2\beta\end{bmatrix}\begin{bmatrix}x_1\\ x_2\end{bmatrix} + \begin{bmatrix}0\\ \alpha\end{bmatrix} r$$

$$y = \begin{bmatrix}1 & 0\end{bmatrix}\begin{bmatrix}x_1\\ x_2\end{bmatrix}$$

where y is the output, and r is the input. The damping ratio ξ and the undamped natural frequency ω_n (rad/sec) of the system are given by

(A) $\xi = \frac{\beta}{\sqrt{\alpha}}$; $\omega_n = \sqrt{\alpha}$ (B) $\xi = \sqrt{\alpha}$; $\omega_n = \frac{\beta}{\sqrt{\alpha}}$
(C) $\xi = \frac{\sqrt{\alpha}}{\beta}$; $\omega_n = \sqrt{\beta}$ (D) $\xi = \sqrt{\beta}$; $\omega_n = \sqrt{\alpha}$

Q.32 A moving coil instrument having a resistance of 10 Ω, gives a full-scale deflection when the current is 10 mA. What should be the value of the series resistance, so that it can be used as a voltmeter for measuring potential difference up to 100 V?

(A) 9 Ω (B) 99 Ω (C) 990 Ω (D) 9990 Ω

Q.33 The enhancement type MOSFET in the circuit below operates according to the square law. $\mu_n C_{ox} = 100\ \mu A/V^2$, the threshold voltage (V_T) is 500 mV. Ignore channel length modulation. The output voltage V_{out} is

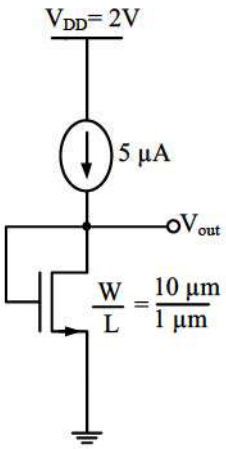

(A) 100 mV (B) 500 mV (C) 600 mV (D) 2 V

Q.34 In the circuit below, the operational amplifier is ideal. If V_1 = 10 mV and V_2 = 50 mV, the output voltage (V_{out}) is

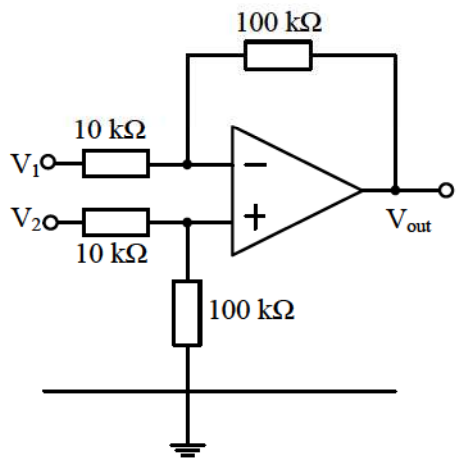

(A) 100 mV (B) 400 mV (C) 500 mV (D) 600 mV

Q.35 The output expression for the Karnaugh map shown below is

RS \ PQ	00	01	11	10
00	0	1	1	0
01	1	1	1	1
11	1	1	1	1
10	0	0	0	0

(A) $Q\overline{R} + S$
(B) $Q\overline{R} + \overline{S}$
(C) $QR + S$
(D) $QR + \overline{S}$

Q.36 In the circuit shown below, X and Y are digital inputs, and Z is a digital output. The equivalent circuit is a

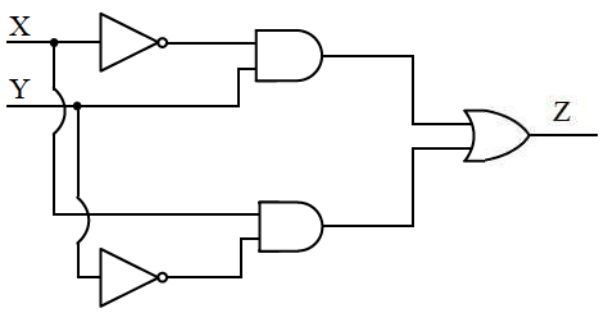

(A) NAND gate (B) NOR gate (C) XOR gate (D) XNOR gate

Q.37 A DC-DC buck converter operates in continuous conduction mode. It has 48 V input voltage, and it feeds a resistive load of 24 Ω. The switching frequency of the converter is 250 Hz. If switch-on duration is 1 ms, the load power is

(A) 6 W (B) 12 W (C) 24 W (D) 48 W

Q.38 The line currents of a three-phase four wire system are square waves with amplitude of 100 A. These three currents are phase shifted by 120° with respect to each other. The rms value of neutral current is

(A) 0 A (B) $\frac{100}{\sqrt{3}}$ A (C) 100 A (D) 300 A

Q.39 If $\mathbf{A} = 2x\mathbf{i} + 3y\mathbf{j} + 4z\mathbf{k}$ and $u = x^2 + y^2 + z^2$, then $\text{div}(u\mathbf{A})$ at (1, 1, 1) is_____.

Q.40 The probability of a resistor being defective is 0.02. There are 50 such resistors in a circuit. The probability of two or more defective resistors in the circuit (round off to two decimal places) is _____.

Q.41 A 0.1 μF capacitor charged to 100 V is discharged through a 1 kΩ resistor. The time in ms (round off to two decimal places) required for the voltage across the capacitor to drop to 1 V is _____.

Q.42 The current I flowing in the circuit shown below in amperes is _____.

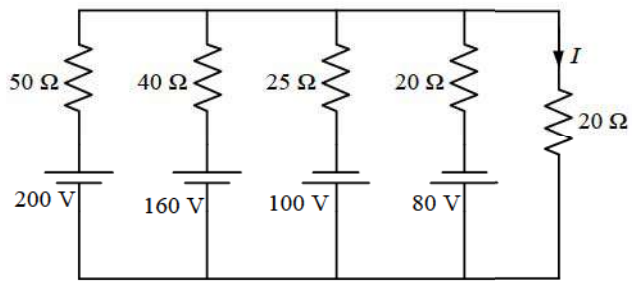

Q.43 The voltage across and the current through a load are expressed as follows

$v(t) = -170 \sin\left(377t - \frac{\pi}{6}\right)$ V

$i(t) = 8 \cos\left(377t + \frac{\pi}{6}\right)$ A

The average power in watts (round off to one decimal place) consumed by the load is _____.

Q.44 The magnetic circuit shown below has uniform cross-sectional area and air gap of 0.2 cm. The mean path length of the core is 40 cm. Assume that leakage and fringing fluxes are negligible. When the core relative permeability is assumed to be infinite, the magnetic flux density computed in the air gap is 1 tesla. With same Ampere-turns, if the core relative permeability is assumed to be 1000 (linear), the flux density in tesla (round off to three decimal places) calculated in the air gap is _____.

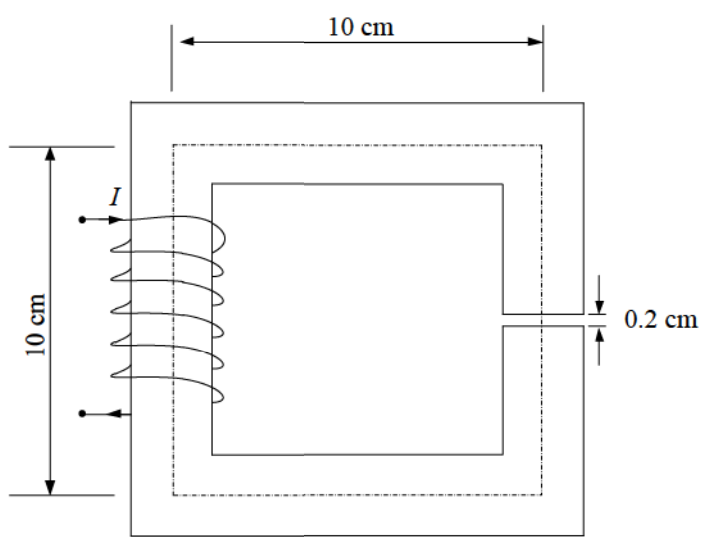

Q.45 A single-phase transformer of rating 25 kVA, supplies a 12 kW load at power factor of 0.6 lagging. The additional load at unity power factor in kW (round off to two decimal places) that may be added before this transformer exceeds its rated kVA is _____.

Q.46 A 220 V DC shunt motor takes 3 A at no-load. It draws 25 A when running at full-load at 1500 rpm. The armature and shunt resistances are 0.5 Ω and 220 Ω, respectively. The no-load speed in rpm (round off to two decimal places) is _____.

Q.47 A delta-connected, 3.7 kW, 400 V(line), three-phase, 4-pole, 50-Hz squirrel-cage induction motor has the following equivalent circuit parameters per phase referred to the stator: $R_1 = 5.39\,\Omega$, $R_2 = 5.72\,\Omega$, $X_1 = X_2 = 8.22\,\Omega$. Neglect shunt branch in the equivalent circuit. The starting line current in amperes (round off to two decimal places) when it is connected to a 100 V (line), 10 Hz, three-phase AC source is _____ .

Q.48 A 220 V (line), three-phase, Y-connected, synchronous motor has a synchronous impedance of $(0.25 + j2.5)$ Ω/phase. The motor draws the rated current of 10 A at 0.8 pf leading. The rms value of line-to-line internal voltage in volts (round off to two decimal places) is _____.

Q.49 A three-phase 50 Hz, 400 kV transmission line is 300 km long. The line inductance is 1 mH/km per phase, and the capacitance is 0.01 μF/km per phase. The line is under open circuit condition at the receiving end and energized with 400 kV at the sending end, the receiving end line voltage in kV (round off to two decimal places) will be _____.

Q.50 A 30 kV, 50 Hz, 50 MVA generator has the positive, negative, and zero sequence reactances of 0.25 pu, 0.15 pu, and 0.05 pu, respectively. The neutral of the generator is grounded with a reactance so that the fault current for a bolted LG fault and that of a bolted three-phase fault at the generator terminal are equal. The value of grounding reactance in ohms (round off to one decimal place) is _____.

Q.51 In the single machine infinite bus system shown below, the generator is delivering the real power of 0.8 pu at 0.8 power factor lagging to the infinite bus. The power angle of the generator in degrees (round off to one decimal place) is _____.

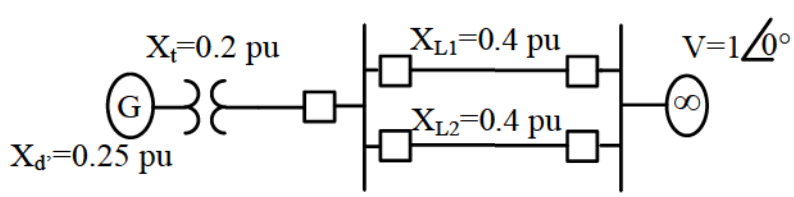

Q.52 In a 132 kV system, the series inductance up to the point of circuit breaker location is 50 mH. The shunt capacitance at the circuit breaker terminal is 0.05 μF. The critical value of resistance in ohms required to be connected across the circuit breaker contacts which will give no transient oscillation is_____.

Q.53 In a DC-DC boost converter, the duty ratio is controlled to regulate the output voltage at 48 V. The input DC voltage is 24 V. The output power is 120 W. The switching frequency is 50 kHz. Assume ideal components and a very large output filter capacitor. The converter operates at the boundary between continuous and discontinuous conduction modes. The value of the boost inductor (in μH) is _____.

Q.54 A fully-controlled three-phase bridge converter is working from a 415 V, 50 Hz AC supply. It is supplying constant current of 100 A at 400 V to a DC load. Assume large inductive smoothing and neglect overlap. The rms value of the AC line current in amperes (round off to two decimal places) is _____.

Q.55 A single-phase fully-controlled thyristor converter is used to obtain an average voltage of 180 V with 10 A constant current to feed a DC load. It is fed from single-phase AC supply of 230 V, 50 Hz. Neglect the source impedance. The power factor (round off to two decimal places) of AC mains is _____.

Q.No.	Type	Section	Key	Marks
1	MCQ	GA	D	1
2	MCQ	GA	C	1
3	MCQ	GA	C	1
4	MCQ	GA	B	1
5	MCQ	GA	D	1
6	MCQ	GA	C	2
7	MCQ	GA	B	2
8	MCQ	GA	A	2
9	MCQ	GA	D	2
10	MCQ	GA	C	2
1	MCQ	EE	C	1
2	MCQ	EE	D	1
3	MCQ	EE	B	1
4	MCQ	EE	B	1
5	MCQ	EE	B	1
6	MCQ	EE	A	1
7	MCQ	EE	C	1
8	MCQ	EE	C	1
9	MCQ	EE	C	1
10	MCQ	EE	C	1
11	MCQ	EE	D	1
12	MCQ	EE	B	1
13	MCQ	EE	A	1

Q.No.	Type	Section	Key	Marks
14	MCQ	EE	A	1
15	MCQ	EE	C	1
16	MCQ	EE	B	1
17	MCQ	EE	D	1
18	NAT	EE	139 to 139	1
19	NAT	EE	1.3 to 1.5	1
20	NAT	EE	9 to 11	1
21	NAT	EE	0.095 to 0.105	1
22	NAT	EE	100 to 100	1
23	NAT	EE	100 to 100	1
24	NAT	EE	3 to 3	1
25	NAT	EE	111.0 to 115.0	1
26	MCQ	EE	C	2
27	MCQ	EE	A	2
28	MCQ	EE	D	2
29	MCQ	EE	B	2
30	MCQ	EE	B	2
31	MCQ	EE	A	2
32	MCQ	EE	D	2
33	MCQ	EE	C	2
34	MCQ	EE	B	2
35	MCQ	EE	A	2
36	MCQ	EE	C	2

Q.No.	Type	Section	Key	Marks
37	MCQ	EE	A OR C	2
38	MCQ	EE	C	2
39	NAT	EE	45 to 45	2
40	NAT	EE	0.25 to 0.27	2
41	NAT	EE	0.45 to 0.47	2
42	NAT	EE	0 to 0	2
43	NAT	EE	585.0 to 590.0	2
44	NAT	EE	0.820 to 0.850	2
45	NAT	EE	7.10 to 7.30	2
46	NAT	EE	1564.00 to 1596.00	2
47	NAT	EE	13.00 to 16.00	2
48	NAT	EE	240.00 to 250.00	2
49	NAT	EE	414.00 to 423.00	2
50	NAT	EE	1.7 to 1.9	2
51	NAT	EE	19.0 to 22.0	2
52	NAT	EE	500 to 500	2
53	NAT	EE	24 to 24	2
54	NAT	EE	81.00 to 82.00	2
55	NAT	EE	0.75 to 0.80	2