EE: Electrical Engineering

GA - General Aptitude

Q1 - Q5 carry one mark each.

Q.No. 1 This book, including all its chapters,_____interesting. The students as well as the instructor_____in agreement about it.

(A) is, was

(B) are, are

(C) is, are

(D) were, was

Q.No. 2 People were prohibited _____their vehicles near the entrance of the main administrative building.

(A) to park

(B) from parking

(C) parking

(D) to have parked

Q.No. 3 Select the word that fits the analogy:

Do : Undo :: Trust : _____

(A) Entrust

(B) Intrust

(C) Distrust

(D) Untrust

Q.No. 4 Stock markets _____ at the news of the coup.

(A) poised

(B) plunged

(C) plugged

(D) probed

Q.No. 5 If P, Q, R, S are four individuals, how many teams of size exceeding one can be formed, with Q as a member?

(A) 5

(B) 6

(C) 7

(D) 8

Q6 - Q10 carry two marks each.

Q.No. 6

Non-performing Assets (NPAs) of a bank in India is defined as an asset, which remains unpaid by a borrower for a certain period of time in terms of interest, principal, or both. Reserve Bank of India (RBI) has changed the definition of NPA thrice during 1993-2004, in terms of the holding period of loans. The holding period was reduced by one quarter each time. In 1993, the holding period was four quarters (360 days).

Based on the above paragraph, the holding period of loans in 2004 after the third revision was _____ days.

(A) 45
(B) 90
(C) 135
(D) 180

Q.No. 7 Select the next element of the series: Z, WV, RQP, ___

(A) LKJI
(B) JIHG
(C) KJIH
(D) NMLK

Q.No. 8 In four-digit integer numbers from 1001 to 9999, the digit group "37" (in the same sequence) appears _____ times.

(A) 270
(B) 279
(C) 280
(D) 299

Q.No. 9 Given a semicircle with O as the centre, as shown in the figure, the ratio $\frac{\overline{AC}+\overline{CB}}{\overline{AB}}$ is _____, where $\overline{AC}$, $\overline{CB}$ and $\overline{AB}$ are chords.

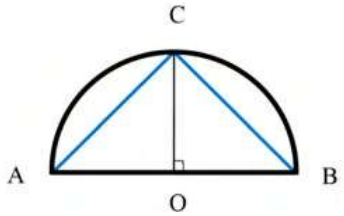

(A) $\sqrt{2}$
(B) $\sqrt{3}$
(C) 2
(D) 3

Q.No. 10

The revenue and expenditure of four different companies P, Q, R and S in 2015 are shown in the figure. If the revenue of company Q in 2015 was 20% more than that in 2014, and company Q had earned a profit of 10% on expenditure in 2014, then its expenditure (in million rupees) in 2014 was _____.

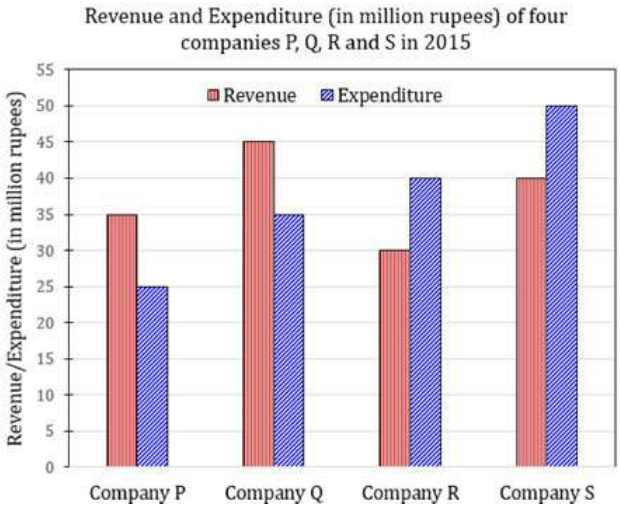

(A) 32.7

(B) 33.7

(C) 34.1

(D) 35.1

EE: Electrical Engineering

Q1 - Q25 carry one mark each.

Q.No. 1 $ax^3 + bx^2 + cx + d$ is a polynomial on real x over real coefficients a, b, c, d wherein $a \neq 0$. Which of the following statements is true?

(A) d can be chosen to ensure that $x = 0$ is a root for any given set a, b, c.

(B) No choice of coefficients can make all roots identical.

(C) a, b, c, d can be chosen to ensure that all roots are complex.

(D) c alone cannot ensure that all roots are real.

Q.No. 2 Which of the following is true for all possible non-zero choices of integers $m, n; m \neq n$, or all possible non-zero choices of real numbers $p, q; p \neq q$, as applicable?

(A) $\frac{1}{\pi}\int_0^{\pi} \sin m\theta \sin n\theta d\theta = 0$

(B) $\frac{1}{2\pi}\int_{-\pi/2}^{\pi/2} \sin p\theta \sin q\theta d\theta = 0$

(C) $\frac{1}{2\pi}\int_{-\pi}^{\pi} \sin p\theta \cos q\theta d\theta = 0$

(D) $\lim_{\alpha\to\infty} \frac{1}{2\alpha}\int_{-\alpha}^{\alpha} \sin p\theta \sin q\theta d\theta = 0$

Q.No. 3 Which of the following statements is true about the two sided Laplace transform?

(A) It exists for every signal that may or may not have a Fourier transform.

(B) It has no poles for any bounded signal that is non-zero only inside a finite time interval.

(C) The number of finite poles and finite zeroes must be equal.

(D) If a signal can be expressed as a weighted sum of shifted one sided exponentials, then its Laplace Transform will have no poles.

Q.No. 4

Consider a signal $x[n] = \left(\frac{1}{2}\right)^n 1[n]$, where $1[n] = 0$ if $n < 0$, and $1[n] = 1$ if $n \geq 0$. The z-transform of $x[n-k]$, $k > 0$ is $\frac{z^{-k}}{1 - \frac{1}{2} z^{-1}}$ with region of convergence being

(A) $|z| < 2$

(B) $|z| > 2$

(C) $|z| < 1/2$

(D) $|z| > 1/2$

Q.No. 5 The value of the following complex integral, with C representing the unit circle centered at origin in the counterclockwise sense, is:

$$\int_C \frac{z^2 + 1}{z^2 - 2z} \, dz$$

(A) $8\pi i$

(B) $-8\pi i$

(C) $-\pi i$

(D) πi

Q.No. 6 x_R and x_A are, respectively, the rms and average values of $x(t) = x(t-T)$, and similarly, y_R and y_A are, respectively, the rms and average values of $y(t) = kx(t)$. k, T are independent of t. Which of the following is true?

(A) $y_A = kx_A; y_R = kx_R$

(B) $y_A = kx_A; y_R \neq kx_R$

(C) $y_A \neq kx_A; y_R = kx_R$

(D) $y_A \neq kx_A; y_R \neq kx_R$

Q.No. 7 A three-phase cylindrical rotor synchronous generator has a synchronous reactance X_s and a negligible armature resistance. The magnitude of per phase terminal voltage is V_A and the magnitude of per phase induced emf is E_A. Considering the following two statements, P and Q,

P: For any three-phase balanced leading load connected across the terminals of this synchronous generator, V_A is always more than E_A

Q: For any three-phase balanced lagging load connected across the terminals of this synchronous generator, V_A is always less than E_A

which of the following options is correct?

(A) P is false and Q is true.

(B) P is true and Q is false.

(C) P is false and Q is false.

(D) P is true and Q is true.

Q.No. 8

A lossless transmission line with 0.2 pu reactance per phase uniformly distributed along the length of the line, connecting a generator bus to a load bus, is protected up to 80 % of its length by a distance relay placed at the generator bus. The generator terminal voltage is 1 pu. There is no generation at the load bus. The threshold pu current for operation of the distance relay for a solid three phase-to-ground fault on the transmission line is closest to:

(A) 1.00

(B) 3.61

(C) 5.00

(D) 6.25

Q.No. 9 Out of the following options, the most relevant information needed to specify the real power (P) at the PV buses in a load flow analysis is

(A) solution of economic load dispatch

(B) rated power output of the generator

(C) rated voltage of the generator

(D) base power of the generator

Q.No. 10 Consider a linear time-invariant system whose input $r(t)$ and output $y(t)$ are related by the following differential equation:

$$\frac{d^2y(t)}{dt^2} + 4y(t) = 6r(t)$$

The poles of this system are at

(A) $+2j, -2j$

(B) $+2, -2$

(C) $+4, -4$

(D) $+4j, -4j$

Q.No. 11 A single-phase, full-bridge diode rectifier fed from a 230 V, 50 Hz sinusoidal source supplies a series combination of finite resistance, R, and a very large inductance, L. The two most dominant frequency components in the source current are:

(A) 50 Hz, 0 Hz

(B) 50 Hz, 100 Hz

(C) 50 Hz, 150 Hz

(D) 150 Hz, 250 Hz

Q.No. 12

Thyristor T_1 is triggered at an angle α (in degree), and T_2 at angle $180^\circ + \alpha$, in each cycle of the sinusoidal input voltage. Assume both thyristors to be ideal. To control the load power over the range 0 to 2 kW, the minimum range of variation in α is:

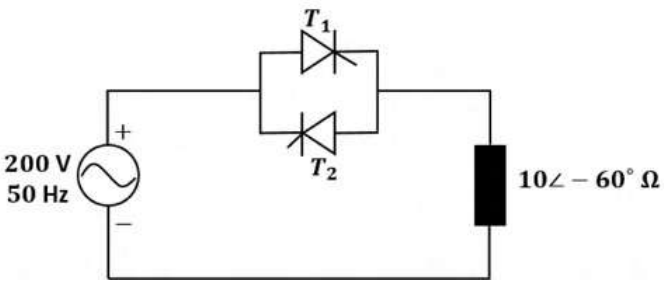

(A) 0° to 60°

(B) 0° to 120°

(C) 60° to 120°

(D) 60° to 180°

Q.No. 13 Which of the options is an equivalent representation of the signal flow graph shown here?

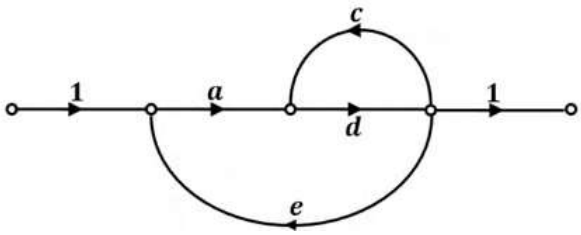

(A)

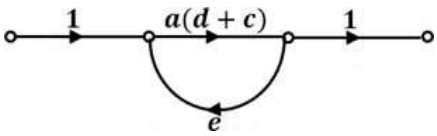

(B)

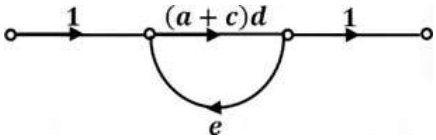

(C)

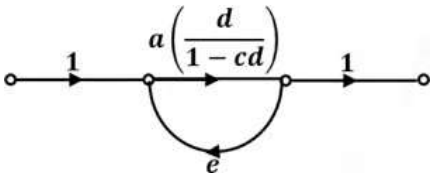

(D)

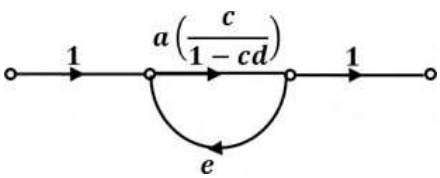

Q.No. 14 A common-source amplifier with a drain resistance, $R_D = 4.7\ k\Omega$, is powered using a 10 V power supply. Assuming that the transconductance, g_m, is 520 μA/V, the voltage gain of the amplifier is closest to:

(A) -2.44

(B) -1.22

(C) 1.22

(D) 2.44

Q.No. 15

A sequence detector is designed to detect precisely 3 digital inputs, with overlapping sequences detectable. For the sequence (1,0,1) and input data (1,1,0,1,0,0,1,1,0,1,0,1,1,0), what is the output of this detector?

(A) 1,1,0,0,0,0,1,1,0,1,0,0

(B) 0,1,0,0,0,0,0,1,0,1,0,0

(C) 0,1,0,0,0,0,0,1,0,1,1,0

(D) 0,1,0,0,0,0,0,0,1,0,0,0

Q.No. 16 Consider the initial value problem below. The value of y at $x = ln\ 2$, (rounded off to 3 decimal places) is _____.

$$\frac{dy}{dx} = 2x - y, \qquad y(0) = 1$$

Q.No. 17 A three-phase, 50 Hz, 4-pole induction motor runs at no-load with a slip of 1 %. With full load, the slip increases to 5 %. The % speed regulation of the motor (rounded off to 2 decimal places) is _____.

Q.No. 18 Currents through ammeters A2 and A3 in the figure are $1\angle 10°$and $1\angle 70°$, respectively. The reading of the ammeter A1(rounded off to 3 decimal places) is _____ A.

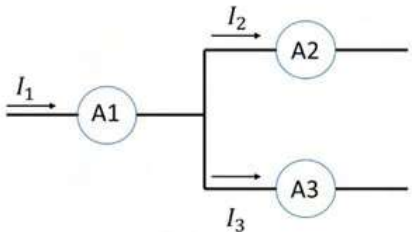

Q.No. 19 The Thevenin equivalent voltage, V_{TH}, in V (rounded off to 2 decimal places) of the network shown below, is _____

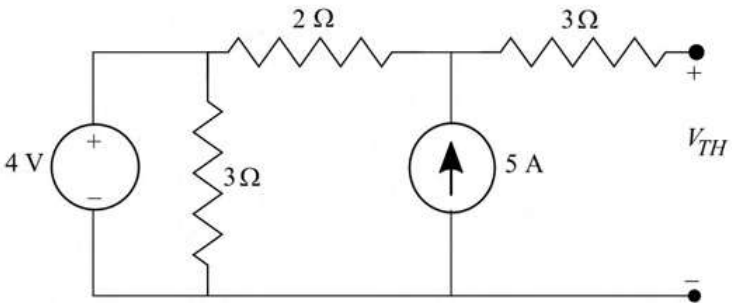

Q.No. 20

A double pulse measurement for an inductively loaded circuit controlled by the IGBT switch is carried out to evaluate the reverse recovery characteristics of the diode, D, represented approximately as a piecewise linear plot of current vs time at diode turn-off. L_{par} is a parasitic inductance due to the wiring of the circuit, and is in series with the diode. The point on the plot (indicate your choice by entering 1, 2, 3 or 4) at which the IGBT experiences the highest current stress is _____.

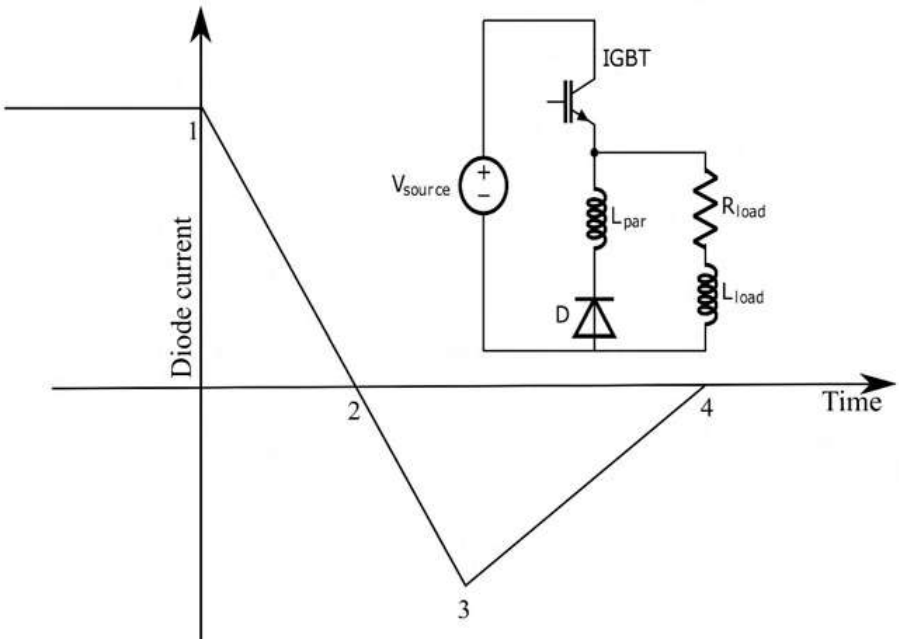

Q.No. 21 A single-phase, 4 kVA, 200 V/100 V, 50 Hz transformer with laminated CRGO steel core has rated no-load loss of 450 W. When the high-voltage winding is excited with 160 V, 40 Hz sinusoidal ac supply, the no-load losses are found to be 320 W. When the high-voltage winding of the same transformer is supplied from a 100 V, 25 Hz sinusoidal ac source, the no-load losses will be _____ W (rounded off to 2 decimal places).

Q.No. 22 A single-phase inverter is fed from a 100 V dc source and is controlled using a quasi-square wave modulation scheme to produce an output waveform, $v(t)$, as shown. The angle σ is adjusted to entirely eliminate the 3rd harmonic component from the output voltage. Under this condition, for $v(t)$, the magnitude of the 5th harmonic component as a percentage of the magnitude of the fundamental component is _____ (rounded off to 2 decimal places).

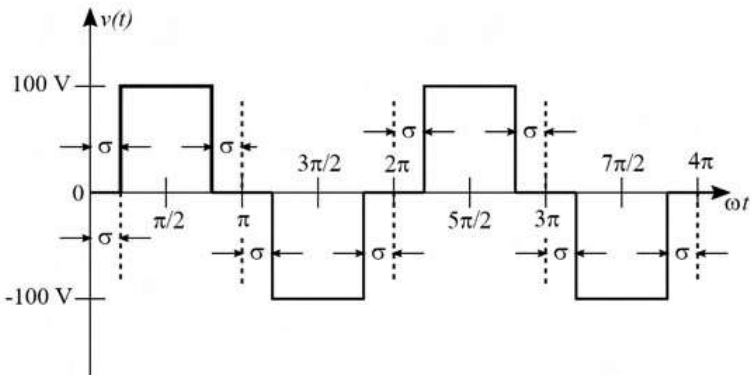

Q.No. 23 A single 50 Hz synchronous generator on droop control was delivering 100 MW power to a system. Due to increase in load, generator power had to be increased by 10 MW, as a result of which, system frequency dropped to 49.75 Hz. Further increase in load in the system resulted in a frequency of 49.25 Hz. At this condition, the power in MW supplied by the generator is _____ (rounded off to 2 decimal places).

Q.No. 24 Consider a negative unity feedback system with forward path transfer function $G(s) = \frac{K}{(s+a)(s-b)(s+c)}$, where K, a, b, c are positive real numbers. For a Nyquist path enclosing the entire imaginary axis and right half of the s-plane in the clockwise direction, the Nyquist plot of $(1 + G(s))$, encircles the origin of $(1 + G(s))$-plane once in the clockwise direction and never passes through this origin for a certain value of K. Then, the number of poles of $\frac{G(s)}{1+G(s)}$ lying in the open right half of the s-plane is _____.

Q.No. 25 The cross-section of a metal-oxide-semiconductor structure is shown schematically. Starting from an uncharged condition, a bias of +3 V is applied to the gate contact with respect to the body contact. The charge inside the silicon dioxide layer is then measured to be $+Q$. The total charge contained within the dashed box shown, upon application of bias, expressed as a multiple of Q (absolute value in Coulombs, rounded off to the nearest integer) is _____.

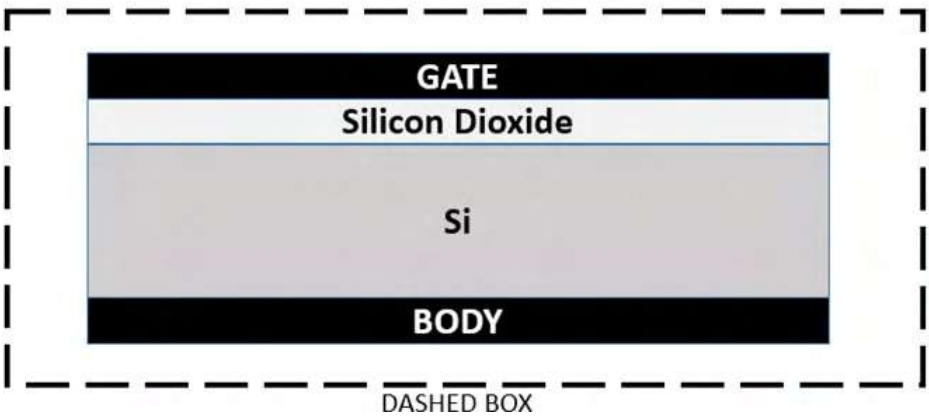

Q26 - Q55 carry two marks each.

Q.No. 26 For real numbers, x and y, with $y = 3x^2 + 3x + 1$, the maximum and minimum value of y for $x \in [-2,0]$ are respectively, _____.

(A) 7 and $1/4$.

(B) 7 and 1.

(C) -2 and $-1/2$.

(D) 1 and $1/4$.

Q.No. 27

The vector function expressed by

$$\mathbf{F} = \mathbf{a}_x\,(5y - k_1 z) + \mathbf{a}_y\,(3z + k_2 x) + \mathbf{a}_z\,(k_3 y - 4x)$$

represents a conservative field, where $\mathbf{a}_x, \mathbf{a}_y, \mathbf{a}_z$ are unit vectors along x, y and z directions, respectively. The values of constants k_1, k_2, k_3 are given by:

(A) $k_1 = 3, k_2 = 3, k_3 = 7$

(B) $k_1 = 3, k_2 = 8, k_3 = 5$

(C) $k_1 = 4, k_2 = 5, k_3 = 3$

(D) $k_1 = 0, k_2 = 0, k_3 = 0$

Q.No. 28 A 250 V dc shunt motor has an armature resistance of 0.2 Ω and a field resistance of 100 Ω. When the motor is operated on no-load at rated voltage, it draws an armature current of 5 A and runs at 1200 rpm. When a load is coupled to the motor, it draws total line current of 50 A at rated voltage, with a 5 % reduction in the air-gap flux due to armature reaction. Voltage drop across the brushes can be taken as 1 V per brush under all operating conditions. The speed of the motor, in rpm, under this loaded condition, is closest to:

(A) 1200

(B) 1000

(C) 1220

(D) 900

Q.No. 29 Two buses, i and j, are connected with a transmission line of admittance Y, at the two ends of which there are ideal transformers with turns ratios as shown. Bus admittance matrix for the system is:

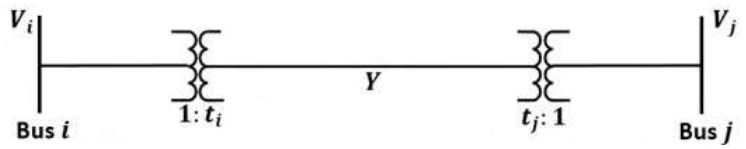

(A) $\begin{bmatrix} -t_i t_j Y & t_j^2 Y \\ t_i^2 Y & -t_i t_j Y \end{bmatrix}$

(B) $\begin{bmatrix} t_i t_j Y & -t_j^2 Y \\ -t_i^2 Y & t_i t_j Y \end{bmatrix}$

(C) $\begin{bmatrix} t_i^2 Y & -t_i t_j Y \\ -t_i t_j Y & t_j^2 Y \end{bmatrix}$

(D) $\begin{bmatrix} t_i t_j Y & -(t_i - t_j)^2 Y \\ -(t_i - t_j)^2 Y & t_i t_j Y \end{bmatrix}$

Q.No. 30

Consider the diode circuit shown below. The diode, D, obeys the current-voltage characteristic $I_D = I_S\left(\exp\left(\frac{V_D}{nV_T}\right) - 1\right)$, where $n > 1$, $V_T > 0$, V_D is the voltage across the diode and I_D is the current through it. The circuit is biased so that voltage, $V > 0$ and current, $I < 0$. If you had to design this circuit to transfer maximum power from the current source (I_1) to a resistive load (not shown) at the output, what values of R_1 and R_2 would you choose?

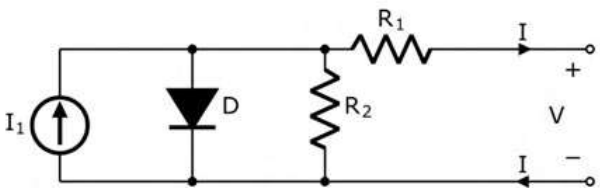

(A) Large R_1 and large R_2.

(B) Small R_1 and small R_2.

(C) Large R_1 and small R_2.

(D) Small R_1 and large R_2.

Q.No. 31 A non-ideal diode is biased with a voltage of -0.03 V, and a diode current of I_1 is measured. The thermal voltage is 26 mV and the ideality factor for the diode is $15/13$. The voltage, in V, at which the measured current increases to $1.5I_1$ is closest to:

(A) -0.02

(B) -0.09

(C) -1.50

(D) -4.50

Q.No. 32 A benchtop dc power supply acts as an ideal 4 A current source as long as its terminal voltage is below 10 V. Beyond this point, it begins to behave as an ideal 10 V voltage source for all load currents going down to 0 A. When connected to an ideal rheostat, find the load resistance value at which maximum power is transferred, and the corresponding load voltage and current.

(A) Short, ∞ A, 10 V

(B) Open, 4 A, 0 V

(C) 2.5 Ω, 4 A, 10 V

(D) 2.5 Ω, 4 A, 5 V

Q.No. 33 The static electric field inside a dielectric medium with relative permittivity, $\varepsilon_r = 2.25$, expressed in cylindrical coordinate system is given by the following expression

$$\mathbf{E} = \mathbf{a}_r\, 2r + \mathbf{a}_\varphi \left(\frac{3}{r}\right) + \mathbf{a}_z\, 6$$

where $\mathbf{a}_r$, $\mathbf{a}_\varphi$, $\mathbf{a}_z$ are unit vectors along r, φ and z directions, respectively. If the above expression represents a valid electrostatic field inside the medium, then the volume charge density associated with this field in terms of free space permittivity, ε_0, in SI units is given by:

(A) $3\varepsilon_0$

(B) $4\varepsilon_0$

(C) $5\varepsilon_0$

(D) $9\varepsilon_0$

Q.No. 34 Consider a permanent magnet dc (PMDC) motor which is initially at rest. At $t = 0$, a dc voltage of 5 V is applied to the motor. Its speed monotonically increases from 0 rad/s to 6.32 rad/s in 0.5 s and finally settles to 10 rad/s. Assuming that the armature inductance of the motor is negligible, the transfer function for the motor is

(A) $\frac{10}{0.5s+1}$

(B) $\frac{2}{0.5s+1}$

(C) $\frac{2}{s+0.5}$

(D) $\frac{10}{s+0.5}$

Q.No. 35 Which of the following options is correct for the system shown below?

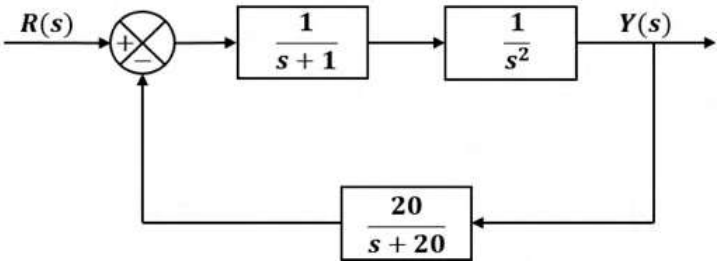

(A) 4th order and stable

(B) 3rd order and stable

(C) 4th order and unstable

(D) 3rd order and unstable

Q.No. 36 Consider a negative unity feedback system with the forward path transfer function $\frac{s^2+s+1}{s^3+2s^2+2s+K}$, where K is a positive real number. The value of K for which the system will have some of its poles on the imaginary axis is _____ .

(A) 9

(B) 8

(C) 7

(D) 6

Q.No. 37 Suppose for input $x(t)$ a linear time-invariant system with impulse response $h(t)$ produces output $y(t)$, so that $x(t) * h(t) = y(t)$. Further, if $|x(t)| * |h(t)| = z(t)$, which of the following statements is true?

(A) For all $t \in (-\infty, \infty)$, $z(t) \leq y(t)$

(B) For some but not all $t \in (-\infty, \infty)$, $z(t) \leq y(t)$

(C) For all $t \in (-\infty, \infty)$, $z(t) \geq y(t)$

(D) For some but not all $t \in (-\infty, \infty)$, $z(t) \geq y(t)$

Q.No. 38 The causal realization of a system transfer function $H(s)$ having poles at $(2, -1), (-2,1)$ and zeroes at $(2,1), (-2, -1)$ will be

(A) stable, real, allpass

(B) unstable, complex, allpass

(C) unstable, real, highpass

(D) stable, complex, lowpass

Q.No. 39 Which of the following options is true for a linear time-invariant discrete time system that obeys the difference equation:

$$y[n] - ay[n-1] = b_0 x[n] - b_1 x[n-1]$$

(A) $y[n]$ is unaffected by the values of $x[n-k]; k > 2$.

(B) The system is necessarily causal.

(C) The system impulse response is non-zero at infinitely many instants.

(D) When $x[n] = 0, n < 0$, the function $y[n]; n > 0$ is solely determined by the function $x[n]$.

Q.No. 40 Let $\mathbf{a}_r$, $\mathbf{a}_\phi$ and $\mathbf{a}_z$ be unit vectors along r, ϕ and z directions, respectively in the cylindrical coordinate system. For the electric flux density given by $\mathbf{D} = (\mathbf{a}_r\, 15 + \mathbf{a}_\phi\, 2r - \mathbf{a}_z\, 3rz)$ Coulomb/m^2, the total electric flux, in Coulomb, emanating from the volume enclosed by a solid cylinder of radius 3 m and height 5 m oriented along the z-axis with its base at the origin is:

(A) 54 π

(B) 90 π

(C) 108 π

(D) 180 π

Q.No. 41 A stable real linear time-invariant system with single pole at p, has a transfer function $H(s) = \frac{s^2+100}{s-p}$ with a dc gain of 5. The smallest positive frequency, in rad/s, at unity gain is closest to:

(A) 8.84

(B) 11.08

(C) 78.13

(D) 122.87

Q.No. 42 The number of purely real elements in a lower triangular representation of the given 3 × 3 matrix, obtained through the given decomposition is _____.

$$\begin{bmatrix} 2 & 3 & 3 \\ 3 & 2 & 1 \\ 3 & 1 & 7 \end{bmatrix} = \begin{bmatrix} a_{11} & 0 & 0 \\ a_{12} & a_{22} & 0 \\ a_{13} & a_{23} & a_{33} \end{bmatrix} \begin{bmatrix} a_{11} & 0 & 0 \\ a_{12} & a_{22} & 0 \\ a_{13} & a_{23} & a_{33} \end{bmatrix}^T$$

(A) 5

(B) 6

(C) 8

(D) 9

Q.No. 43

The figure below shows the per-phase Open Circuit Characteristics (measured in V) and Short Circuit Characteristics (measured in A) of a 14 kVA, 400 V, 50 Hz, 4-pole, 3-phase, delta connected alternator, driven at 1500 rpm. The field current, I_f is measured in A. Readings taken are marked as respective (x, y) coordinates in the figure. Ratio of the unsaturated and saturated synchronous impedances $(Z_{s(unsat)}/Z_{s(sat)})$ of the alternator is closest to:

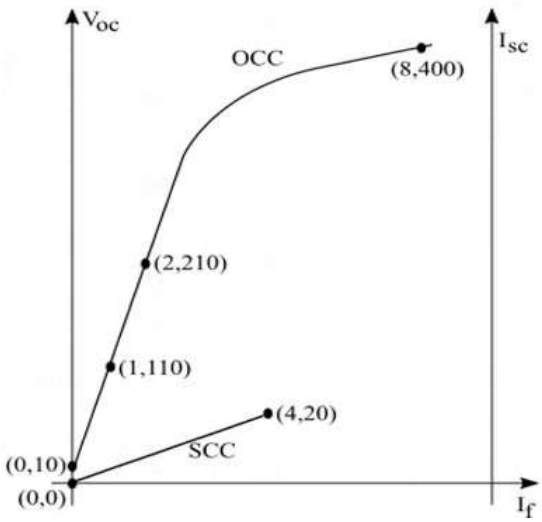

(A) 2.100
(B) 2.025
(C) 2.000
(D) 1.000

Q.No. 44 Let $\mathbf{a}_x$ and $\mathbf{a}_y$ be unit vectors along x and y directions, respectively. A vector function is given by

$$\mathbf{F} = \mathbf{a}_x\, y - \mathbf{a}_y\, x$$

The line integral of the above function

$$\int_C \mathbf{F} \cdot d\boldsymbol{l}$$

along the curve $\boldsymbol{C}$, which follows the parabola $y = x^2$ as shown below is _____ (rounded off to 2 decimal places).

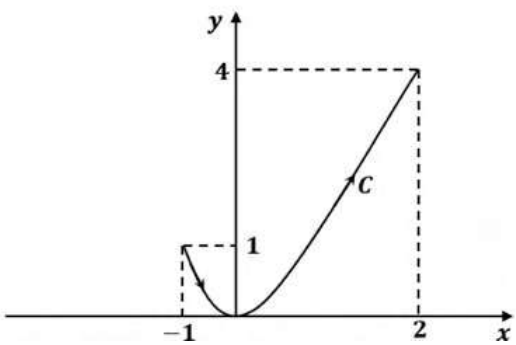

Q.No. 45

A resistor and a capacitor are connected in series to a 10 V dc supply through a switch. The switch is closed at $t = 0$, and the capacitor voltage is found to cross 0 V at $t = 0.4\tau$, where τ is the circuit time constant. The absolute value of percentage change required in the initial capacitor voltage if the zero crossing has to happen at $t = 0.2\tau$ is _____ (rounded off to 2 decimal places).

Q.No. 46 A cylindrical rotor synchronous generator with constant real power output and constant terminal voltage is supplying 100 A current to a 0.9 lagging power factor load. An ideal reactor is now connected in parallel with the load, as a result of which the total lagging reactive power requirement of the load is twice the previous value while the real power remains unchanged. The armature current is now _____ A (rounded off to 2 decimal places).

Q.No. 47 Bus 1 with voltage magnitude $V_1 = 1.1$ pu is sending reactive power Q_{12} towards bus 2 with voltage magnitude $V_2 = 1$ pu through a lossless transmission line of reactance X. Keeping the voltage at bus 2 fixed at 1 pu, magnitude of voltage at bus 1 is changed, so that the reactive power Q_{12} sent from bus 1 is increased by 20%. Real power flow through the line under both the conditions is zero. The new value of the voltage magnitude, V_1, in pu (rounded off to 2 decimal places), at bus 1 is _____.

Q.No. 48 Windings 'A', 'B' and 'C' have 20 turns each and are wound on the same iron core as shown, along with winding 'X' which has 2 turns. The figure shows the sense (clockwise/anti-clockwise) of each of the windings only and does not reflect the exact number of turns. If windings 'A', 'B' and 'C' are supplied with balanced 3-phase voltages at 50 Hz and there is no core saturation, the no-load RMS voltage (in V, rounded off to 2 decimal places) across winding 'X' is _____.

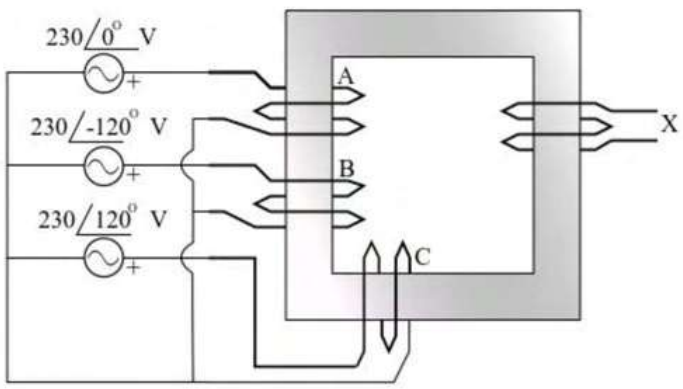

Q.No. 49

A cylindrical rotor synchronous generator has steady state synchronous reactance of 0.7 pu and subtransient reactance of 0.2 pu. It is operating at $(1 + j0)$ pu terminal voltage with an internal emf of $(1 + j0.7)$ pu. Following a three-phase solid short circuit fault at the terminal of the generator, the magnitude of the subtransient internal emf (rounded off to 2 decimal places) is _____ pu.

Q.No. 50 In the dc-dc converter circuit shown, switch Q is switched at a frequency of 10 kHz with a duty ratio of 0.6. All components of the circuit are ideal, and the initial current in the inductor is zero. Energy stored in the inductor in mJ (rounded off to 2 decimal places) at the end of 10 complete switching cycles is _____.

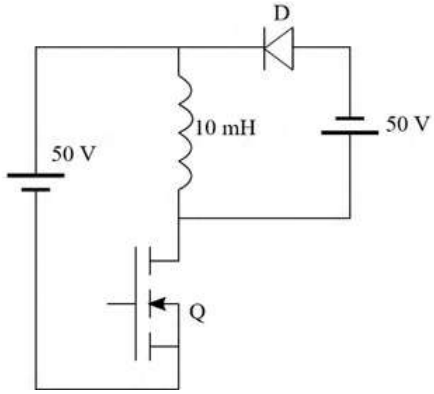

Q.No. 51 A single-phase, full-bridge, fully controlled thyristor rectifier feeds a load comprising a 10 Ω resistance in series with a very large inductance. The rectifier is fed from an ideal 230 V, 50 Hz sinusoidal source through cables which have negligible internal resistance and a total inductance of 2.28 mH. If the thyristors are triggered at an angle $\alpha = 45°$, the commutation overlap angle in degree (rounded off to 2 decimal places) is _____.

Q.No. 52 A non-ideal Si-based pn junction diode is tested by sweeping the bias applied across its terminals from -5 V to $+5$ V. The effective thermal voltage, V_T, for the diode is measured to be (29 ± 2) mV. The resolution of the voltage source in the measurement range is 1 mV. The percentage uncertainty (rounded off to 2 decimal places) in the measured current at a bias voltage of 0.02 V is _____.

Q.No. 53

The temperature of the coolant oil bath for a transformer is monitored using the circuit shown. It contains a thermistor with a temperature-dependent resistance, $R_{thermistor} = 2\,(1 + \alpha\, T)$ kΩ, where T is the temperature in °C. The temperature coefficient, α, is $-(4 \pm 0.25)$ %/°C. Circuit parameters: $R_1 = 1$ kΩ, $R_2 = 1.3$ kΩ, $R_3 = 2.6$ kΩ. The error in the output signal (in V, rounded off to 2 decimal places) at 150°C is _____.

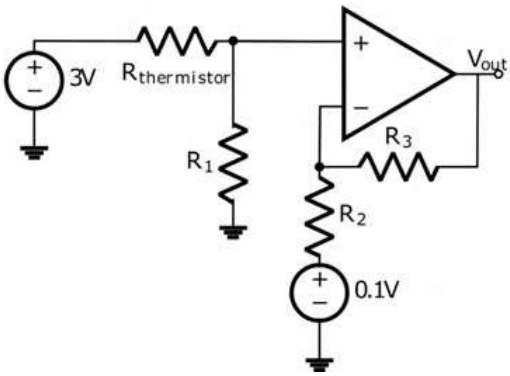

Q.No. 54 An 8085 microprocessor accesses two memory locations (2001H) and (2002H), that contain 8-bit numbers 98H and B1H, respectively. The following program is executed:

LXI H,2001H

MVI A, 21H

INX H

ADD M

INX H

MOV M, A

HLT

At the end of this program, the memory location 2003H contains the number in decimal (base 10) form _____.

Q.No. 55

A conducting square loop of side length 1 m is placed at a distance of 1 m from a long straight wire carrying a current $I = 2$ A as shown below. The mutual inductance, in nH (rounded off to 2 decimal places), between the conducting loop and the long wire is _____.

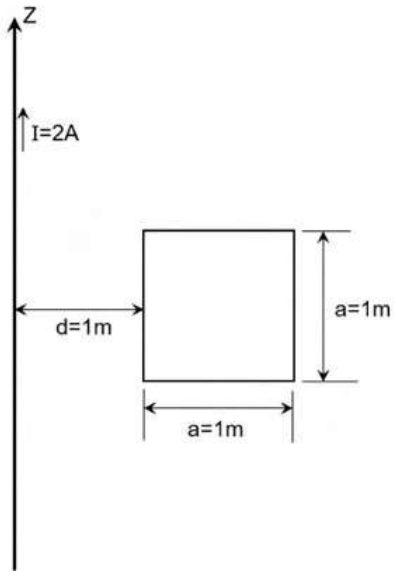

Copyright : GATE 2020, IIT Delhi

GATE 2020

Graduate Aptitude Test in Engineering 2020

IIT Delhi

Organising Institute

Answer Key - EE: Electrical Engineering

Q.No.	Session	Que.Type	Sec. Name	Key	Marks
1	5	MCQ	GA	C	1
2	5	MCQ	GA	B	1
3	5	MCQ	GA	C	1
4	5	MCQ	GA	B	1
5	5	MCQ	GA	C	1
6	5	MCQ	GA	B	2
7	5	MCQ	GA	C	2
8	5	MCQ	GA	C	2
9	5	MCQ	GA	A	2
10	5	MCQ	GA	C	2
1	5	MCQ	EE	A OR D	1
2	5	MCQ	EE	C	1
3	5	MCQ	EE	B	1
4	5	MCQ	EE	D	1
5	5	MCQ	EE	C	1
6	5	MCQ	EE	A	1
7	5	MCQ	EE	A	1
8	5	MCQ	EE	D	1
9	5	MCQ	EE	A	1
10	5	MCQ	EE	A	1
11	5	MCQ	EE	C	1
12	5	MCQ	EE	MTA	1
13	5	MCQ	EE	C	1
14	5	MCQ	EE	A	1
15	5	MCQ	EE	B	1
16	5	NAT	EE	0.8774 to 0.8952	1
17	5	NAT	EE	4.10 to 4.40	1
18	5	NAT	EE	1.700 to 1.750	1
19	5	NAT	EE	13.80 to 14.20	1
20	5	NAT	EE	3 to 3	1
21	5	NAT	EE	162.41 to 162.59	1
22	5	NAT	EE	19.90 to 20.20	1
23	5	NAT	EE	123.00 to 135.00	1
24	5	NAT	EE	2 to 2	1
25	5	NAT	EE	0 to 0	1
26	5	MCQ	EE	A	2
27	5	MCQ	EE	C	2
28	5	MCQ	EE	C	2
29	5	MCQ	EE	C	2
30	5	MCQ	EE	D	2
31	5	MCQ	EE	B	2
32	5	MCQ	EE	C	2
33	5	MCQ	EE	D	2

34	5	MCQ	EE	B	2
35	5	MCQ	EE	C	2
36	5	MCQ	EE	B	2
37	5	MCQ	EE	C	2
38	5	MCQ	EE	B	2
39	5	MCQ	EE	C	2
40	5	MCQ	EE	D	2
41	5	MCQ	EE	A	2
42	5	MCQ	EE	MTA	2
43	5	MCQ	EE	A	2
44	5	NAT	EE	-3.05 to -2.95	2
45	5	NAT	EE	54.00 to 56.00	2
46	5	NAT	EE	123.00 to 127.00	2
47	5	NAT	EE	1.11 to 1.13	2
48	5	NAT	EE	MTA	2
49	5	NAT	EE	1.01 to 1.03	2
50	5	NAT	EE	4.95 to 5.05	2
51	5	NAT	EE	4.51 to 5.10	2
52	5	NAT	EE	11.50 to 12.00	2
53	5	NAT	EE	MTA	2
54	5	NAT	EE	210 to 210	2
55	5	NAT	EE	138.10 to 139.20	2

Copyright : GATE 2020, IIT Delhi