General Aptitude (GA)

Q.1 – Q.5 Multiple Choice Question (MCQ), carry ONE mark each (for each wrong answer: – 1/3).

Q.1	**The people _____ were at the demonstration were from all sections of society.**
(A)	whose
(B)	which
(C)	who
(D)	whom

Q.2

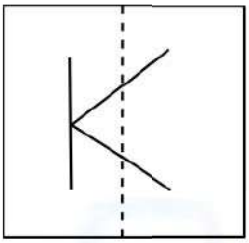

A transparent square sheet shown above is folded along the dotted line. The folded sheet will look like _____.

(A)

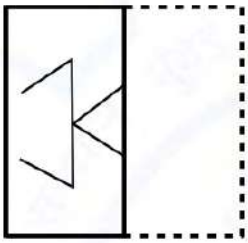

(B)

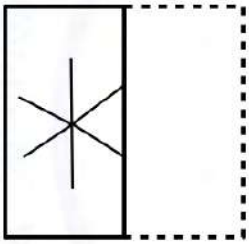

(C)

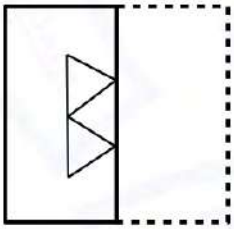

(D)

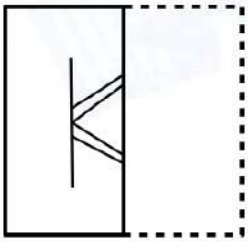

Q.3	**For a regular polygon having 10 sides, the interior angle between the sides of the polygon, in degrees, is:**
(A)	396
(B)	324
(C)	216
(D)	144

Q.4	**Which one of the following numbers is exactly divisible by $\left(11^{13}+1\right)$?**
(A)	$11^{26}+1$
(B)	$11^{33}+1$
(C)	$11^{39}-1$
(D)	$11^{52}-1$

Q.5	***Oasis* is to *sand* as *island* is to _____** **Which one of the following options maintains a similar logical relation in the above sentence?**
(A)	Stone
(B)	Land
(C)	Water
(D)	Mountain

Q. 6 – Q. 10 Multiple Choice Question (MCQ), carry TWO marks each (for each wrong answer: – 2/3).

Q.6	**The importance of sleep is often overlooked by students when they are preparing for exams. Research has consistently shown that sleep deprivation greatly reduces the ability to recall the material learnt. Hence, cutting down on sleep to study longer hours can be counterproductive.** **Which one of the following statements is the CORRECT inference from the above passage?**
(A)	Sleeping well alone is enough to prepare for an exam. Studying has lesser benefit.
(B)	Students are efficient and are not wrong in thinking that sleep is a waste of time.
(C)	If a student is extremely well prepared for an exam, he needs little or no sleep.
(D)	To do well in an exam, adequate sleep must be part of the preparation.

Q.7	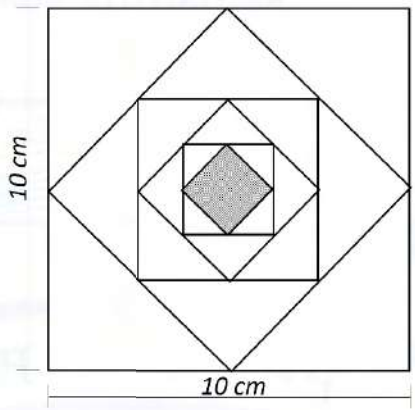 **In the figure shown above, each inside square is formed by joining the midpoints of the sides of the next larger square. The area of the smallest square (shaded) as shown, in cm^2 is:**
(A)	12.50
(B)	6.25
(C)	3.125
(D)	1.5625

Q.8	**Let X be a continuous random variable denoting the temperature measured. The range of temperature is [0, 100] degree Celsius and let the probability density function of X be $f(x) = 0.01$ for $0 \leq X \leq 100$.** **The mean of X is _____**
(A)	2.5
(B)	5.0
(C)	25.0
(D)	50.0

Q.9

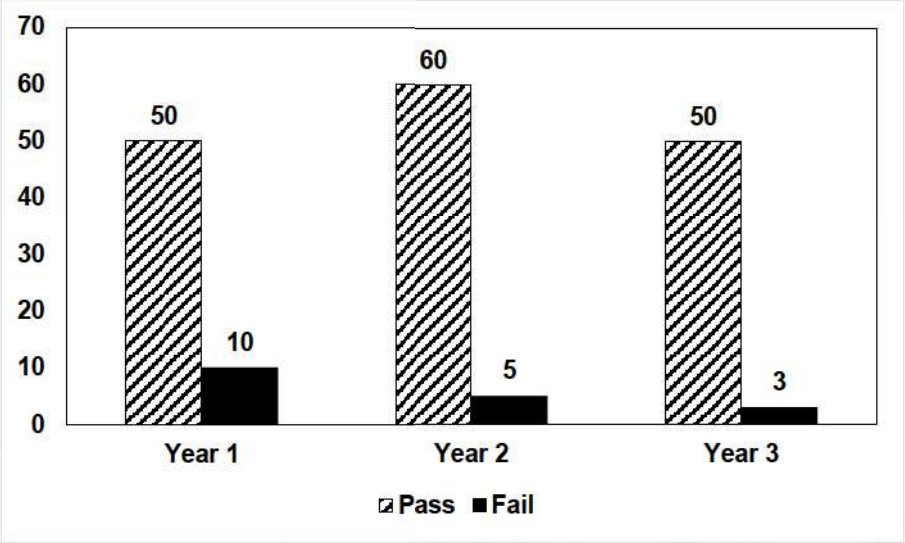

The number of students passing or failing in an exam for a particular subject are presented in the bar chart above. Students who pass the exam cannot appear for the exam again. Students who fail the exam in the first attempt must appear for the exam in the following year. Students always pass the exam in their second attempt.

The number of students who took the exam for the first time in the year 2 and the year 3 respectively, are _____.

A)	65 and 53
(B)	60 and 50
(C)	55 and 53
(D)	55 and 48

Q.10	**Seven cars P, Q, R, S, T, U and V are parked in a row not necessarily in that order. The cars T and U should be parked next to each other. The cars S and V also should be parked next to each other, whereas P and Q cannot be parked next to each other. Q and S must be parked next to each other. R is parked to the immediate right of V. T is parked to the left of U.** **Based on the above statements, the only INCORRECT option given below is:**
(A)	There are two cars parked in between Q and V.
(B)	Q and R are not parked together.
(C)	V is the only car parked in between S and R.
(D)	Car P is parked at the extreme end.

Electrical Engineering (EE)

Q.1 – Q.12 Multiple Choice Question (MCQ), carry ONE mark each (for each wrong answer: – 1/3).

Q.1	**Let p and q be real numbers such that $p^2 + q^2 = 1$. The eigenvalues of the matrix $\begin{bmatrix} p & q \\ q & -p \end{bmatrix}$ are**
(A)	1 and 1
(B)	1 and -1
(C)	j and $-j$
(D)	pq and $-pq$

Q.2	**Let $p(z) = z^3 + (1+j)z^2 + (2+j)z + 3$, where z is a complex number. Which one of the following is true?**
(A)	$\text{conjugate}\{p(z)\} = p(\text{conjugate}\{z\})$ for all z
(B)	The sum of the roots of $p(z) = 0$ is a real number
(C)	The complex roots of the equation $p(z) = 0$ come in conjugate pairs
(D)	All the roots cannot be real

Q.3	**Let $f(x)$ be a real-valued function such that $f'(x_0)=0$ for some $x_0 \in (0,1)$, and $f''(x) > 0$ for all $x \in (0,1)$. Then $f(x)$ has**
(A)	no local minimum in (0, 1)
(B)	one local maximum in (0, 1)
(C)	exactly one local minimum in (0, 1)
(D)	two distinct local minima in (0, 1)

Q.4	**For the network shown, the equivalent Thevenin voltage and Thevenin impedance as seen across terminals 'ab' is** 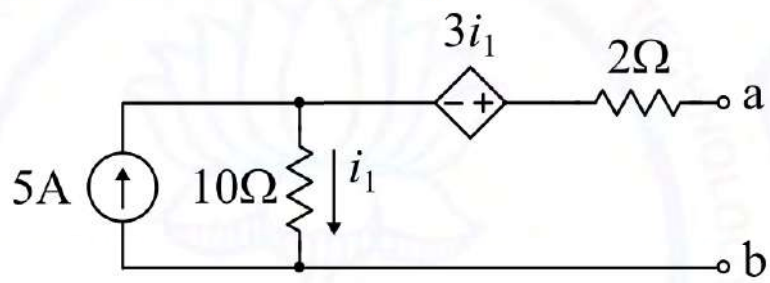
(A)	10 V in series with 12 Ω
(B)	65 V in series with 15 Ω
(C)	50 V in series with 2 Ω
(D)	35 V in series with 2 Ω

Q.5	**Which one of the following vector functions represents a magnetic field $\vec{B}$?** ($\hat{x}$, $\hat{y}$, and $\hat{z}$ **are unit vectors along x-axis, y-axis, and z-axis, respectively)**
(A)	$10x\hat{x} + 20y\hat{y} - 30z\hat{z}$
(B)	$10y\hat{x} + 20x\hat{y} - 10z\hat{z}$
(C)	$10z\hat{x} + 20y\hat{y} - 30x\hat{z}$
(D)	$10x\hat{x} - 30z\hat{y} + 20y\hat{z}$

Q.6	**If the input $x(t)$ and output $y(t)$ of a system are related as $y(t) = \max(0, x(t))$, then the system is**
(A)	linear and time-variant
(B)	linear and time-invariant
(C)	non-linear and time-variant
(D)	non-linear and time-invariant

Q.7	**Two discrete-time linear time-invariant systems with impulse responses $h_1[n] = \delta[n-1] + \delta[n+1]$ and $h_2[n] = \delta[n] + \delta[n-1]$ are connected in cascade, where $\delta[n]$ is the Kronecker delta. The impulse response of the cascaded system is**
(A)	$\delta[n-2] + \delta[n+1]$
(B)	$\delta[n-1]\delta[n] + \delta[n+1]\delta[n-1]$
(C)	$\delta[n-2] + \delta[n-1] + \delta[n] + \delta[n+1]$
(D)	$\delta[n]\delta[n-1] + \delta[n-2]\delta[n+1]$

Q.8 **Consider the table given:**

Constructional feature	Machine type	Mitigation
(P) Damper bars	(S) Induction motor	(X) Hunting
(Q) Skewed rotor slots	(T) Transformer	(Y) Magnetic locking
(R) Compensating winding	(U) Synchronous machine	(Z) Armature reaction
	(V) DC machine	

The correct combination that relates the constructional feature, machine type and mitigation is

(A) P-V-X, Q-U-Z, R-T-Y

(B) P-U-X, Q-S-Y, R-V-Z

(C) P-T-Y, Q-V-Z, R-S-X

(D) P-U-X, Q-V-Y, R-T-Z

Q.9 **Consider a power system consisting of N number of buses. Buses in this power system are categorized into slack bus, PV buses and PQ buses for load flow study. The number of PQ buses is N_L. The balanced Newton-Raphson method is used to carry out load flow study in polar form. H, S, M, and R are sub-matrices of the Jacobian matrix J as shown below:**

$$\begin{bmatrix} \Delta P \\ \Delta Q \end{bmatrix} = J \begin{bmatrix} \Delta \delta \\ \Delta V \end{bmatrix}, \text{ where } J = \begin{bmatrix} H & S \\ M & R \end{bmatrix}$$

The dimension of the sub-matrix M is

(A) $N_L \times (N-1)$

(B) $(N-1)\times(N-1-N_L)$

(C) $N_L \times (N-1+N_L)$

(D) $(N-1)\times(N-1+N_L)$

Q.10	**Two generators have cost functions F_1 and F_2. Their incremental-cost characteristics are** $\frac{dF_1}{dP_1} = 40 + 0.2P_1$ $\frac{dF_2}{dP_2} = 32 + 0.4P_2$ **They need to deliver a combined load of 260 MW. Ignoring the network losses, for economic operation, the generations P_1 and P_2 (in MW) are**
(A)	$P_1 = P_2 = 130$
(B)	$P_1 = 160,\ P_2 = 100$
(C)	$P_1 = 140,\ P_2 = 120$
(D)	$P_1 = 120,\ P_2 = 140$

Q.11	**For the closed-loop system shown, the transfer function $\frac{E(s)}{R(s)}$ is** 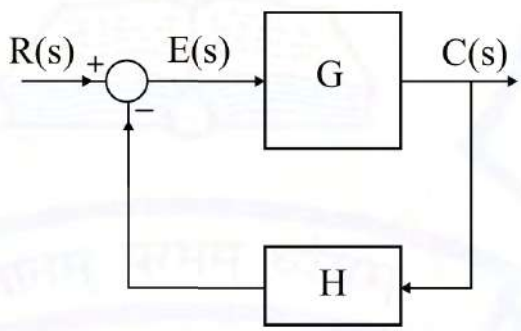
(A)	$\frac{G}{1+GH}$
(B)	$\frac{GH}{1+GH}$
(C)	$\frac{1}{1+GH}$
(D)	$\frac{1}{1+G}$

Q.12	Inductance is measured by
(A)	Schering bridge
(B)	Maxwell bridge
(C)	Kelvin bridge
(D)	Wien bridge

Q.13 – Q.25 Numerical Answer Type (NAT), carry ONE mark each (no negative marks).

Q.13	**Suppose the circles $x^2+y^2=1$ and $(x-1)^2+(y-1)^2=r^2$ intersect each other orthogonally at the point (u,v). Then $u+v=$ _____.**

Q.14	**In the given circuit, the value of capacitor C that makes current $I=0$ is _____ μF.** 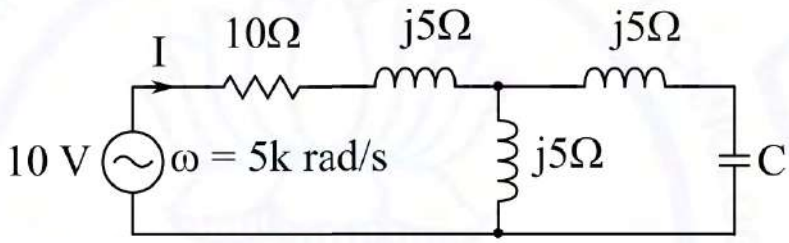

Q.15	**Two single-core power cables have total conductor resistances of 0.7 Ω and 0.5 Ω, respectively, and their insulation resistances (between core and sheath) are 600 MΩ and 900 MΩ, respectively. When the two cables are joined in series, the ratio of insulation resistance to conductor resistance is _____$\times 10^6$.**

Q.16	**In the given circuit, for voltage V_y to be zero, the value of β should be _____. (Round off to 2 decimal places).** 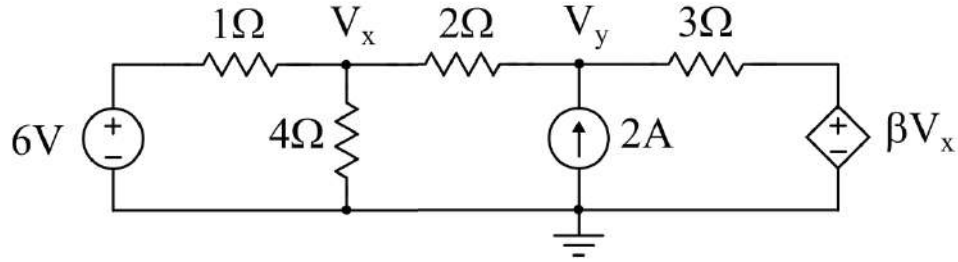

Q.17	**A 1 μC point charge is held at the origin of a cartesian coordinate system. If a second point charge of 10 μC is moved from (0, 10, 0) to (5, 5, 5) and subsequently to (5, 0, 0), then the total work done is ____ mJ. (Round off to 2 decimal places).** **Take $\frac{1}{4\pi\varepsilon_o} = 9\times10^9$ in SI units. All coordinates are in meters.**

Q.18	**The power input to a 500 V, 50 Hz, 6-pole, 3-phase induction motor running at 975 RPM is 40 kW. The total stator losses are 1 kW. If the total friction and windage losses are 2.025 kW, then the efficiency is _____%.**

Q.19	**An alternator with internal voltage of $1\angle\delta_1$ p.u and synchronous reactance of 0.4 p.u is connected by a transmission line of reactance 0.1 p.u to a synchronous motor having synchronous reactance 0.35 p.u and internal voltage of $0.85\angle\delta_2$ p.u. If the real power supplied by the alternator is 0.866 p.u, then $(\delta_1-\delta_2)$ is ____ degrees. (Round off to 2 decimal places.)** **(Machines are of non-salient type. Neglect resistances.)**

Q.20	**The Bode magnitude plot for the transfer function $\frac{V_o(s)}{V_i(s)}$ of the circuit is as shown. The value of R is _____ Ω. (Round off to 2 decimal places.)** 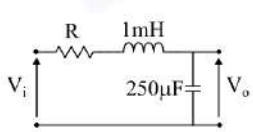 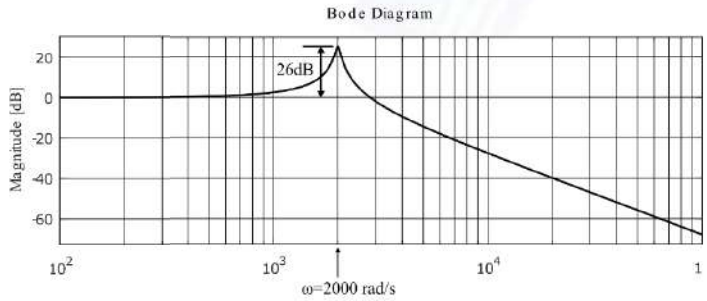

Q.21	**A signal generator having a source resistance of 50 Ω is set to generate a 1 kHz sinewave. Open circuit terminal voltage is 10 V peak-to-peak. Connecting a capacitor across the terminals reduces the voltage to 8 V peak-to-peak. The value of this capacitor is _____ μF. (Round off to 2 decimal places.)**

Q.22	**A 16-bit synchronous binary up-counter is clocked with a frequency f_{CLK}. The two most significant bits are OR-ed together to form an output Y. Measurements show that Y is periodic, and the duration for which Y remains high in each period is 24 ms. The clock frequency f_{CLK} is _____ MHz. (Round off to 2 decimal places.)**

Q.23	**In the BJT circuit shown, beta of the PNP transistor is 100. Assume $V_{BE} = -0.7$ V. The voltage across R_C will be 5 V when R_2 is ____ kΩ. (Round off to 2 decimal places.)** 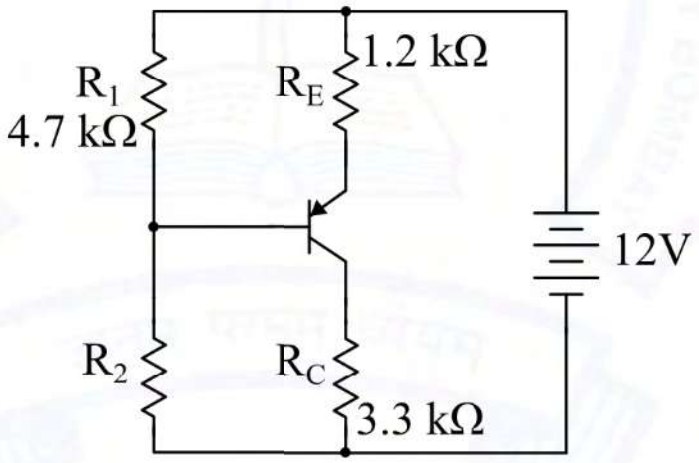

Q.24 **In the circuit shown, the input V_i is a sinusoidal AC voltage having an RMS value of $230\,V \pm 20\%$. The worst-case peak-inverse voltage seen across any diode is _____ V. (Round off to 2 decimal places.)**

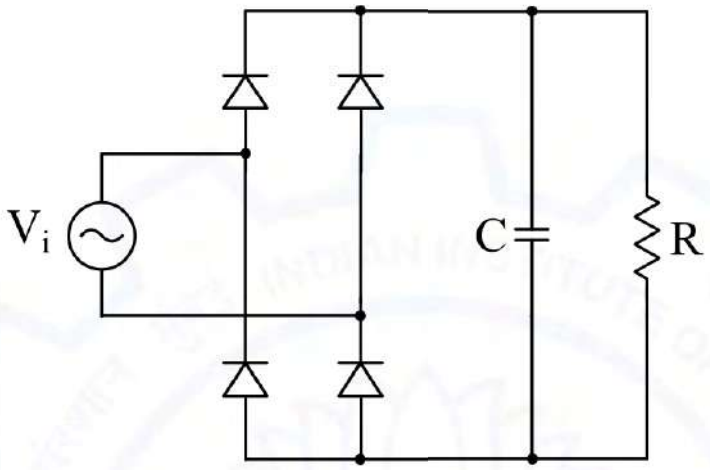

Q.25 **In the circuit shown, a 5 V Zener diode is used to regulate the voltage across load R_0. The input is an unregulated DC voltage with a minimum value of 6 V and a maximum value of 8 V. The value of R_S is 6 Ω. The Zener diode has a maximum rated power dissipation of 2.5 W. Assuming the Zener diode to be ideal, the minimum value of R_0 is _____ Ω.**

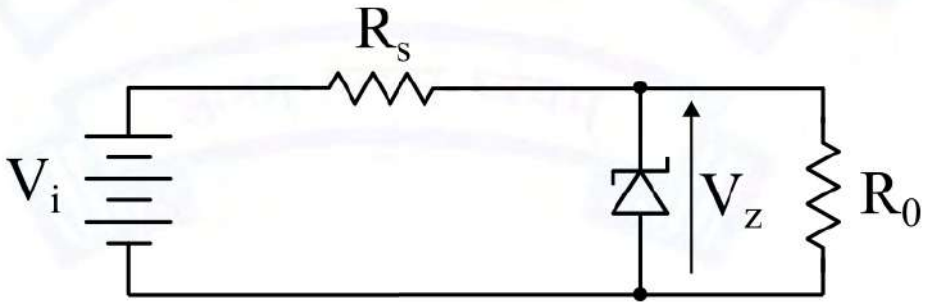

Q.26 – Q.37 Multiple Choice Question (MCQ), carry TWO mark each (for each wrong answer: – 2/3).

Q.26	**In the open interval $(0, 1)$, the polynomial $p(x) = x^4 - 4x^3 + 2$ has**
(A)	two real roots
(B)	one real root
(C)	three real roots
(D)	no real roots

Q.27	**Suppose the probability that a coin toss shows "head" is p, where $0 < p < 1$. The coin is tossed repeatedly until the first "head" appears. The expected number of tosses required is**
(A)	$p/(1-p)$
(B)	$(1-p)/p$
(C)	$1/p$
(D)	$1/p^2$

Q.28	**Let $(-1-j)$, $(3-j)$, $(3+j)$ and $(-1+j)$ be the vertices of a rectangle C in the complex plane. Assuming that C is traversed in counter-clockwise direction, the value of the contour integral $\oint_C \frac{dz}{z^2(z-4)}$ is**
(A)	$j\pi/2$
(B)	0
(C)	$-j\pi/8$
(D)	$j\pi/16$

Q.29	**In the circuit, switch 'S' is in the closed position for a very long time. If the switch is opened at time $t=0$, then $i_L(t)$ in amperes, for $t \geq 0$ is** 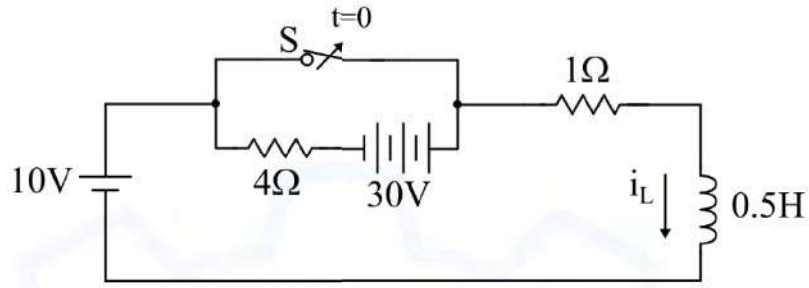
(A)	$8\,e^{-10t}$
(B)	10
(C)	$8+2e^{-10t}$
(D)	$10(1-e^{-2t})$

Q.30	**The input impedance, $Z_{in}(s)$, for the network shown is** 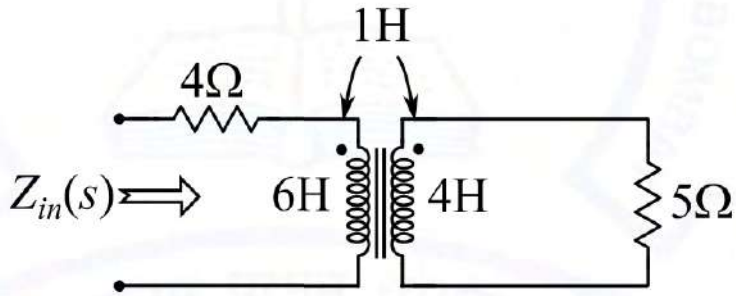
(A)	$\dfrac{23s^2+46s+20}{4s+5}$
(B)	$6s+4$
(C)	$7s+4$
(D)	$\dfrac{25s^2+46s+20}{4s+5}$

Q.31	**The causal signal with z-transform $z^2(z-a)^{-2}$ is ($u[n]$ is the unit step signal)**
(A)	$a^{2n}u[n]$
(B)	$(n+1)a^n u[n]$
(C)	$n^{-1}a^n u[n]$
(D)	$n^2 a^n u[n]$

Q.32	**Let $f(t)$ be an even function, i.e. $f(-t)=f(t)$ for all *t*. Let the Fourier transform of $f(t)$ be defined as $F(\omega)=\int_{-\infty}^{\infty} f(t)e^{-j\omega t}dt$. Suppose $\frac{dF(\omega)}{d\omega}=-\omega F(\omega)$ for all ω, and $F(0)=1$. Then**
(A)	$f(0)<1$
(B)	$f(0)>1$
(C)	$f(0)=1$
(D)	$f(0)=0$

Q.33	**In a single-phase transformer, the total iron loss is 2500 W at nominal voltage of 440 V and frequency 50 Hz. The total iron loss is 850 W at 220 V and 25 Hz. Then, at nominal voltage and frequency, the hysteresis loss and eddy current loss respectively are**
(A)	1600 W and 900 W
(B)	900 W and 1600 W
(C)	250 W and 600 W
(D)	600 W and 250 W

Q.34	**In the figure shown, self-impedances of the two transmission lines are 1.5j p.u each, and Z_m = 0.5j p.u is the mutual impedance. Bus voltages shown in the figure are in p.u. Given that $\delta > 0$, the maximum steady-state real power that can be transferred in p.u from Bus-1 to Bus-2 is** 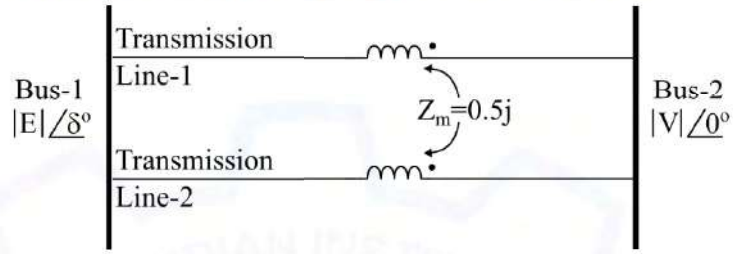
(A)	$\|E\|\|V\|$
(B)	$\frac{\|E\|\|V\|}{2}$
(C)	$2\|E\|\|V\|$
(D)	$\frac{3\|E\|\|V\|}{2}$

Q.35 **A 3-Bus network is shown. Consider generators as ideal voltage sources. If rows 1, 2 and 3 of the Y_{Bus} matrix correspond to Bus 1, 2 and 3, respectively, then Y_{Bus} of the network is**

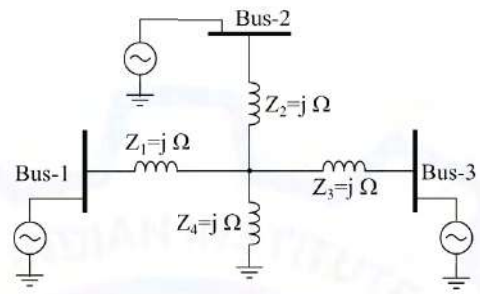

(A)	$\begin{bmatrix} -4j & j & j \\ j & -4j & j \\ j & j & -4j \end{bmatrix}$	(B)	$\begin{bmatrix} -4j & 2j & 2j \\ 2j & -4j & 2j \\ 2j & 2j & -4j \end{bmatrix}$
(C)	$\begin{bmatrix} -\frac{3}{4}j & \frac{1}{4}j & \frac{1}{4}j \\ \frac{1}{4}j & -\frac{3}{4}j & \frac{1}{4}j \\ \frac{1}{4}j & \frac{1}{4}j & -\frac{3}{4}j \end{bmatrix}$	(D)	$\begin{bmatrix} -\frac{1}{2}j & \frac{1}{4}j & \frac{1}{4}j \\ \frac{1}{4}j & -\frac{1}{2}j & \frac{1}{4}j \\ \frac{1}{4}j & \frac{1}{4}j & -\frac{1}{2}j \end{bmatrix}$

Q.36 **Suppose I_A, I_B and I_C are a set of unbalanced current phasors in a three-phase system. The phase-B zero-sequence current $I_{B0} = 0.1\angle 0°$ p.u. If phase-A current $I_A = 1.1\angle 0°$ p.u and phase-C current $I_C = (1\angle 120° + 0.1)$ p.u, then I_B in p.u is**

(A)	$1\angle 240° - 0.1\angle 0°$
(B)	$1.1\angle 240° - 0.1\angle 0°$
(C)	$1.1\angle -120° + 0.1\angle 0°$
(D)	$1\angle -120° + 0.1\angle 0°$

Q.37	**A counter is constructed with three D flip-flops. The input-output pairs are named (D_0, Q_0), (D_1, Q_1), and (D_2, Q_2), where the subscript 0 denotes the least significant bit. The output sequence is desired to be the Gray-code sequence 000, 001, 011, 010, 110, 111, 101, and 100, repeating periodically. Note that the bits are listed in the Q_2 Q_1 Q_0 format. The combinational logic expression for D_1 is**
(A)	$Q_2Q_1Q_0$
(B)	$Q_2Q_0 + Q_1\overline{Q}_0$
(C)	$\overline{Q}_2Q_0 + Q_1\overline{Q}_0$
(D)	$Q_2Q_1 + \overline{Q}_2\overline{Q}_1$

Q.38 – Q.55 Numerical Answer Type (NAT), carry TWO mark each (no negative marks).

Q.38	**Let $\mathbf{A}$ be a 10×10 matrix such that $\mathbf{A}^5$ is a null matrix, and let $\mathbf{I}$ be the 10×10 identity matrix. The determinant of $\mathbf{A} + \mathbf{I}$ is _____.**

Q.39	**A three-phase balanced voltage is applied to the load shown. The phase sequence is RYB. The ratio $\frac{\lvert I_B \rvert}{\lvert I_R \rvert}$ is _____.** 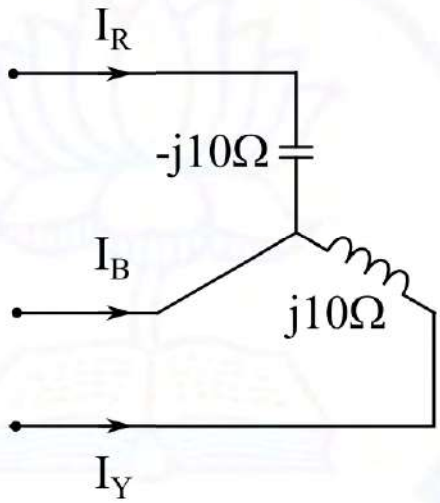

Q.40	**In the given circuit, for maximum power to be delivered to R_L, its value should be _____ Ω.** **(Round off to 2 decimal places.)** 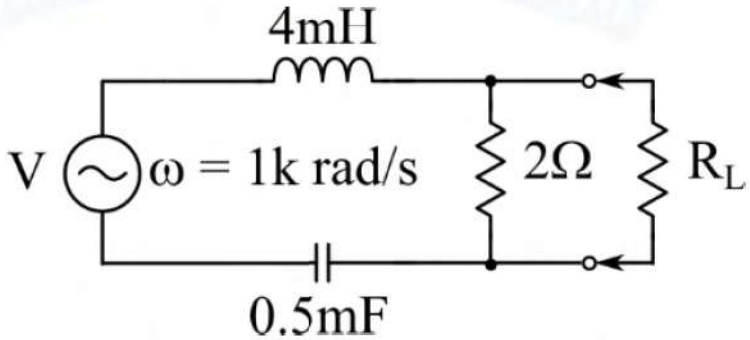

Q.41	**One coulomb of point charge moving with a uniform velocity** $10\,\hat{x}$ **m/s enters the region** $x \geq 0$ **having a magnetic flux density** $\vec{B}=(10\,y\,\hat{x}+10\,x\,\hat{y}+10\,\hat{z})$ **T. The magnitude of force on the charge at** $x=0^{+}$ **is _____ N.** **(**$\hat{x}$, $\hat{y}$, and $\hat{z}$ **are unit vectors along x-axis, y-axis, and z-axis, respectively.)**

Q.42	**Consider a large parallel plate capacitor. The gap** d **between the two plates is filled entirely with a dielectric slab of relative permittivity 5. The plates are initially charged to a potential difference of** V **volts and then disconnected from the source. If the dielectric slab is pulled out completely, then the ratio of the new electric field** E_2 **in the gap to the original electric field** E_1 **is _____.**

Q.43	**Consider a continuous-time signal** $x(t)$ **defined by** $x(t)=0$ **for** $\lvert t\rvert>1$, **and** $x(t)=1-\lvert t\rvert$ **for** $\lvert t\rvert\leq 1$. **Let the Fourier transform of** $x(t)$ **be defined as** $X(\omega)=\int_{-\infty}^{\infty} x(t)e^{-j\omega t}dt$. **The maximum magnitude of** $X(\omega)$ **is _____.**

Q.44	**A belt-driven DC shunt generator running at 300 RPM delivers 100 kW to a 200 V DC grid. It continues to run as a motor when the belt breaks, taking 10 kW from the DC grid. The armature resistance is 0.025 Ω, field resistance is 50 Ω, and brush drop is 2 V. Ignoring armature reaction, the speed of the motor is _____ RPM. (Round off to 2 decimal places.)**

Q.45	**An 8-pole, 50 Hz, three-phase, slip-ring induction motor has an effective rotor resistance of 0.08 Ω per phase. Its speed at maximum torque is 650 RPM. The additional resistance per phase that must be inserted in the rotor to achieve maximum torque at start is _____ Ω. (Round off to 2 decimal places.) Neglect magnetizing current and stator leakage impedance. Consider equivalent circuit parameters referred to stator.**

Q.46

Consider a closed-loop system as shown. $G_p(s)=\dfrac{14.4}{s(1+0.1s)}$ **is the plant transfer function and** $G_c(s)=1$ **is the compensator. For a unit-step input, the output response has damped oscillations. The damped natural frequency is _____ rad/s. (Round off to 2 decimal places.)**

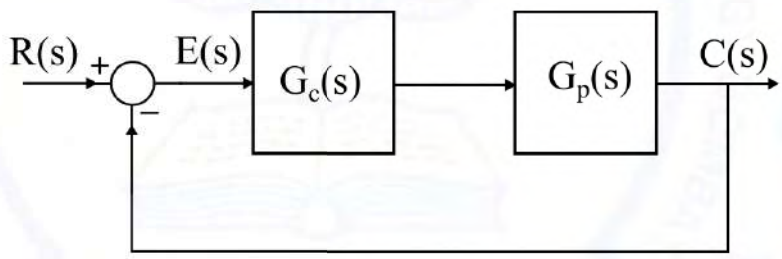

Q.47

In the given figure, plant $G_p(s)=\dfrac{2.2}{(1+0.1s)(1+0.4s)(1+1.2s)}$ **and compensator** $G_c(s)=K\left(\dfrac{1+T_1s}{1+T_2s}\right)$**. The external disturbance input is D(s). It is desired that when the disturbance is a unit step, the steady-state error should not exceed 0.1 unit. The minimum value of K is _____.**
(Round off to 2 decimal places.)

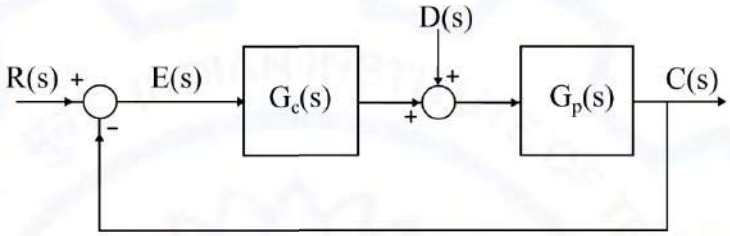

Q.48

The waveform shown in solid line is obtained by clipping a full-wave rectified sinusoid (shown dashed). The ratio of the RMS value of the full-wave rectified waveform to the RMS value of the clipped waveform is _____.
(Round off to 2 decimal places.)

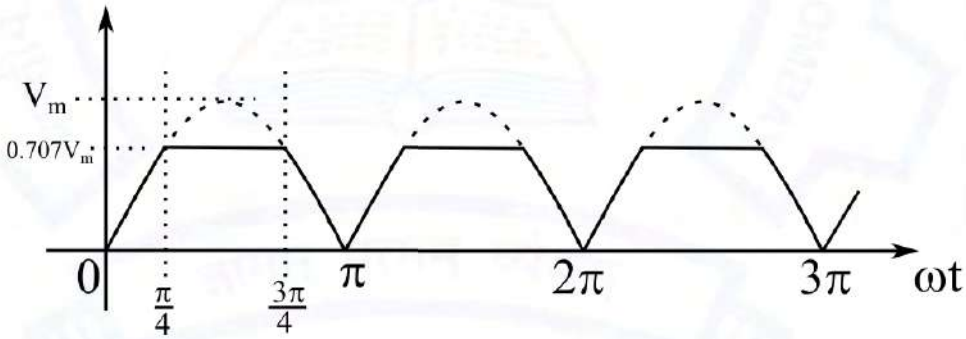

Q.49 **The state space representation of a first-order system is given as**

$$\dot{x} = -x + u$$
$$y = x$$

where, x is the state variable, u is the control input and y is the controlled output. Let $u = -\mathrm{K}\,x$ be the control law, where K is the controller gain. To place a closed-loop pole at -2, the value of K is _____.

Q.50 **An air-core radio-frequency transformer as shown has a primary winding and a secondary winding. The mutual inductance M between the windings of the transformer is _____ μH.**
(Round off to 2 decimal places.)

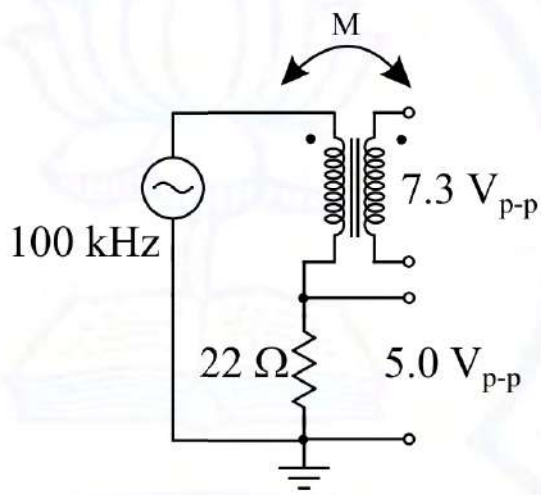

Q.51 **A 100 Hz square wave, switching between 0 V and 5 V, is applied to a CR high-pass filter circuit as shown. The output voltage waveform across the resistor is 6.2 V peak-to-peak. If the resistance R is 820 Ω, then the value C is _____ μF.**
(Round off to 2 decimal places.)

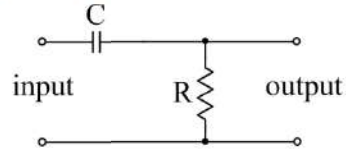

Q.52	**A CMOS Schmitt-trigger inverter has a low output level of 0 V and a high output level of 5 V. It has input thresholds of 1.6 V and 2.4 V. The input capacitance and output resistance of the Schmitt-trigger are negligible. The frequency of the oscillator shown is _____ Hz.** **(Round off to 2 decimal places.)** 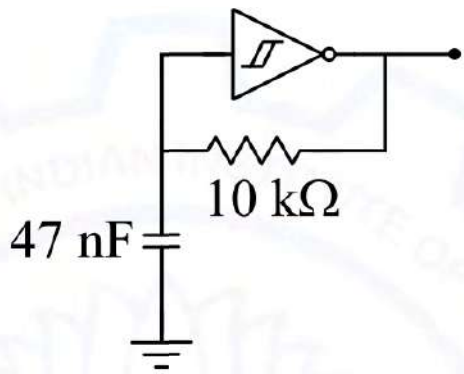

Q.53	**Consider the boost converter shown. Switch Q is operating at 25 kHz with a duty cycle of 0.6. Assume the diode and switch to be ideal. Under steady-state condition, the average resistance R_{in} as seen by the source is _____ Ω.** **(Round off to 2 decimal places.)** 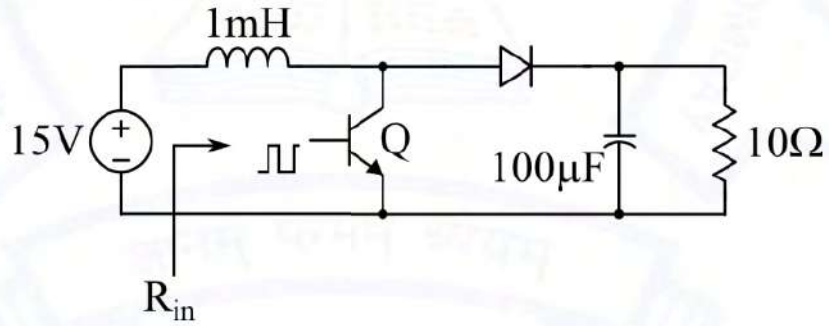

Q.54	**Consider the buck-boost converter shown. Switch Q is operating at 25 kHz and 0.75 duty-cycle. Assume diode and switch to be ideal. Under steady-state condition, the average current flowing through the inductor is _____ A.** 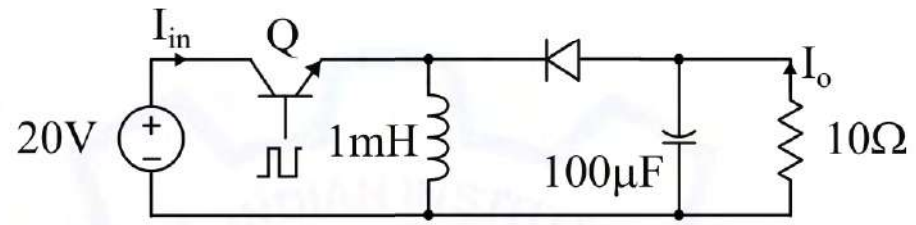

Q.55	**A single-phase full-bridge inverter fed by a 325 V DC produces a symmetric quasi-square waveform across 'ab' as shown. To achieve a modulation index of 0.8, the angle θ expressed in degrees should be _____.** **(Round off to 2 decimal places.)** **(Modulation index is defined as the ratio of the peak of the fundamental component of V_{ab} to the applied DC value.)** 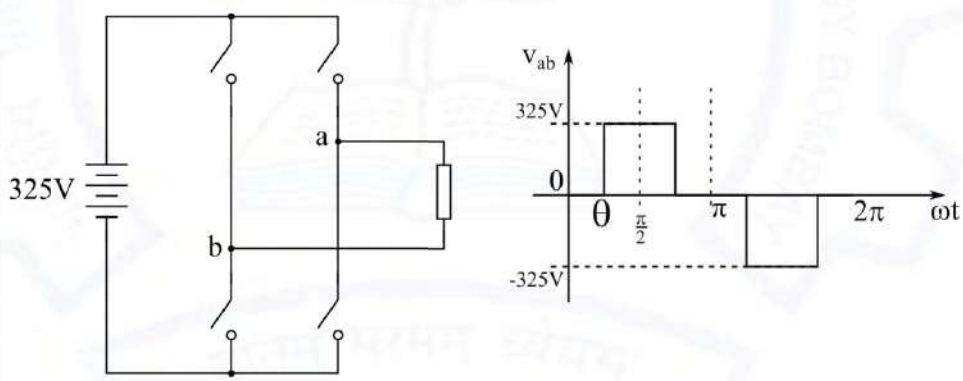

END OF THE QUESTION PAPER

Graduate Aptitude Test in Engineering (GATE 2021)

Subject/Paper: Electrical Engineering (EE)

Q. No.	Session	Question Type MCQ/MSQ/NAT	Section Name	Answer Key/Range	Marks	Negative Marks
1	3	MCQ	GA	C	1	1/3
2	3	MCQ	GA	C	1	1/3
3	3	MCQ	GA	D	1	1/3
4	3	MCQ	GA	D	1	1/3
5	3	MCQ	GA	C	1	1/3
6	3	MCQ	GA	D	2	2/3
7	3	MCQ	GA	C	2	2/3
8	3	MCQ	GA	D	2	2/3
9	3	MCQ	GA	D	2	2/3
10	3	MCQ	GA	A	2	2/3
1	3	MCQ	EE	B	1	1/3
2	3	MCQ	EE	D	1	1/3
3	3	MCQ	EE	C	1	1/3
4	3	MCQ	EE	B	1	1/3
5	3	MCQ	EE	A	1	1/3
6	3	MCQ	EE	D	1	1/3
7	3	MCQ	EE	C	1	1/3
8	3	MCQ	EE	B	1	1/3
9	3	MCQ	EE	A	1	1/3
10	3	MCQ	EE	B	1	1/3

GATE 2021 Answer Key for Electrical Engineering (EE)

Q. No.	Session	Question Type MCQ/MSQ/NAT	Section Name	Answer Key/Range	Marks	Negative Marks
11	3	MCQ	EE	C	1	1/3
12	3	MCQ	EE	B	1	1/3
13	3	NAT	EE	1 to 1	1	0
14	3	NAT	EE	20.00 to 20.00	1	0
15	3	NAT	EE	300 to 300	1	0
16	3	NAT	EE	-3.30 to -3.20	1	0
17	3	NAT	EE	8.90 to 9.10	1	0
18	3	NAT	EE	89.50 to 90.50	1	0
19	3	NAT	EE	59.00 to 61.00	1	0
20	3	NAT	EE	0.09 to 0.11	1	0
21	3	NAT	EE	2.30 to 2.50	1	0
22	3	NAT	EE	2.00 to 2.10	1	0
23	3	NAT	EE	16.70 to 17.70	1	0
24	3	NAT	EE	389 to 391	1	0
25	3	NAT	EE	29.00 to 31.00	1	0
26	3	MCQ	EE	B	2	2/3
27	3	MCQ	EE	C	2	2/3
28	3	MCQ	EE	C	2	2/3
29	3	MCQ	EE	C	2	2/3
30	3	MCQ	EE	A	2	2/3
31	3	MCQ	EE	B	2	2/3
32	3	MCQ	EE	A	2	2/3
33	3	MCQ	EE	B	2	2/3

GATE 2021 Answer Key for Electrical Engineering (EE)

Q. No.	Session	Question Type MCQ/MSQ/NAT	Section Name	Answer Key/Range	Marks	Negative Marks
34	3	MCQ	EE	A	2	2/3
35	3	MCQ	EE	C	2	2/3
36	3	MCQ	EE	D	2	2/3
37	3	MCQ	EE	C	2	2/3
38	3	NAT	EE	1 to 1	2	0
39	3	NAT	EE	1 to 1	2	0
40	3	NAT	EE	1.40 to 1.42	2	0
41	3	NAT	EE	100 to 100	2	0
42	3	NAT	EE	5 to 5	2	0
43	3	NAT	EE	1 to 1	2	0
44	3	NAT	EE	273.00 to 277.00	2	0
45	3	NAT	EE	0.50 to 0.54	2	0
46	3	NAT	EE	10.80 to 11.00	2	0
47	3	NAT	EE	9.50 to 9.60	2	0
48	3	NAT	EE	1.20 to 1.23	2	0
49	3	NAT	EE	1 to 1	2	0
50	3	NAT	EE	50.00 to 52.00	2	0
51	3	NAT	EE	12.30 to 12.60	2	0
52	3	NAT	EE	3150.00 to 3170.00	2	0
53	3	NAT	EE	1.55 to 1.65	2	0
54	3	NAT	EE	24 to 24	2	0
55	3	NAT	EE	50.00 to 52.00	2	0