2007
ME: Mechanical Engineering

Duration : Three Hours | Maximum Marks :150

Read the following instructions carefully.

1. This question paper contains 85 objective type questions. Q.1 to Q.20 carry **one** mark each and Q.21 to Q.85 carry **two** marks each.

2. Attempt all the questions.

3. Questions must be answered on **O**bjective **R**esponse **S**heet (**ORS**) by darkening the appropriate bubble (marked A, B, C, D) using HB pencil against the question number on the left hand side of the **ORS**. **Each question has only one correct answer.** In case you wish to change an answer, erase the old answer completely.

4. Wrong answers will carry NEGATIVE marks. In Q.1 to Q.20, **0.25** mark will be deducted for each wrong answer. In Q.21 to Q.76, Q.78, Q.80, Q.82 and in Q.84, **0.5** mark will be deducted for each wrong answer. However, there is no negative marking in Q.77, Q.79, Q.81, Q.83 and in Q.85. More than one answer bubbled against a question will be taken as an incorrect response. Unattempted questions will not carry any marks.

5. Write your registration number, your name and name of the examination centre at the specified locations on the right half of the **ORS**.

6. Using HB pencil, darken the appropriate bubble under each digit of your registration number and the letters corresponding to your paper code.

7. Calculator is allowed in the examination hall.

8. Charts, graph sheets or tables are NOT allowed in the examination hall.

9. Rough work can be done on the question paper itself. Additionally blank pages are given at the end of the question paper for rough work.

10. This question paper contains **24** printed pages including pages for rough work. Please check all pages and report, if there is any discrepancy.

S/121 Food/06–ME–1A

Q. 1 – Q. 20 carry one mark each.

Q.1 The minimum value of function $y = x^2$ in the interval [1,5] is

(A) 0 (B) 1 (C) 25 (D) undefined

Q.2 If a square matrix **A** is real and symmetric, then the eigenvalues

(A) are always real
(B) are always real and positive
(C) are always real and non-negative
(D) occur in complex conjugate pairs

Q.3 If $\varphi(x, y)$ and $\psi(x, y)$ are functions with continuous second derivatives, then $\varphi(x, y) + i\psi(x, y)$ can be expressed as an analytic function of $x + iy$ ($i = \sqrt{-1}$), when

(A) $\frac{\partial \varphi}{\partial x} = -\frac{\partial \psi}{\partial x}; \frac{\partial \varphi}{\partial y} = \frac{\partial \psi}{\partial y}$

(B) $\frac{\partial \varphi}{\partial y} = -\frac{\partial \psi}{\partial x}; \frac{\partial \varphi}{\partial x} = \frac{\partial \psi}{\partial y}$

(C) $\frac{\partial^2 \varphi}{\partial x^2} + \frac{\partial^2 \varphi}{\partial y^2} = \frac{\partial^2 \psi}{\partial x^2} + \frac{\partial^2 \psi}{\partial y^2} = 1$

(D) $\frac{\partial \varphi}{\partial x} + \frac{\partial \varphi}{\partial y} = \frac{\partial \psi}{\partial x} + \frac{\partial \psi}{\partial y} = 0$

Q.4 The partial differential equation

$$\frac{\partial^2 \varphi}{\partial x^2} + \frac{\partial^2 \varphi}{\partial y^2} + \left(\frac{\partial \varphi}{\partial x}\right) + \left(\frac{\partial \varphi}{\partial y}\right) = 0$$

has

(A) degree 1 order 2 (B) degree 1 order 1
(C) degree 2 order 1 (D) degree 2 order 2

Q.5 Which of the following relationships is valid only for reversible processes undergone by a closed system of simple compressible substance (neglect changes in kinetic and potential energy)?

(A) $\delta Q = dU + \delta W$ (B) $T\,dS = dU + p\,dV$
(C) $T\,dS = dU + \delta W$ (D) $\delta Q = dU + p\,dV$

Q.6 Water has a critical specific volume of 0.003155 m^3/kg. A closed and rigid steel tank of volume 0.025 m^3 contains a mixture of water and steam at 0.1 MPa. The mass of the mixture is 10 kg. The tank is now slowly heated. The liquid level inside the tank

(A) will rise
(B) will fall
(C) will remain constant
(D) may rise or fall depending on the amount of heat transferred

Q.7 Consider an incompressible laminar boundary layer flow over a flat plate of length L, aligned with the direction of an oncoming uniform free stream. If F is the ratio of the drag force on the front half of the plate to the drag force on the rear half, then

(A) $F < 1/2$ (B) $F = 1/2$ (C) $F = 1$ (D) $F > 1$

Q.8 In a steady flow through a nozzle, the flow velocity on the nozzle axis is given by $\mathbf{v} = u_o(1+3x/L)\mathbf{i}$, where x is the distance along the axis of the nozzle from its inlet plane and L is the length of the nozzle. The time required for a fluid particle on the axis to travel from the inlet to the exit plane of the nozzle is

(A) $\frac{L}{u_o}$ (B) $\frac{L}{3u_o}\ln 4$ (C) $\frac{L}{4u_o}$ (D) $\frac{L}{2.5u_o}$

Q.9 Consider steady laminar incompressible axi-symmetric fully developed viscous flow through a straight circular pipe of constant cross-sectional area at a Reynolds number of 5. The ratio of inertia force to viscous force on a fluid particle is

(A) 5 (B) 1/5 (C) 0 (D) ∞

Q.10 In a simply-supported beam loaded as shown below, the maximum bending moment in Nm is

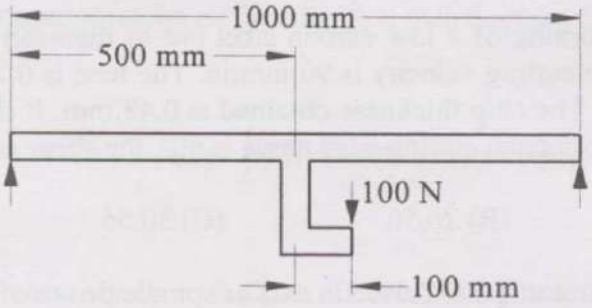

(A) 25 (B) 30 (C) 35 (D) 60

Q.11 A ball bearing operating at a load F has 8000 hours of life. The life of the bearing, in hours, when the load is doubled to $2F$ is

(A) 8000 (B) 6000 (C) 4000 (D) 1000

Q.12 During inelastic collision of two particles, which one of the following is conserved?

(A) total linear momentum only
(B) total kinetic energy only
(C) both linear momentum and kinetic energy
(D) neither linear momentum nor kinetic energy

Q.13 A steel rod of length L and diameter D, fixed at both ends, is uniformly heated to a temperature rise of ΔT. The Young's modulus is E and the coefficient of linear expansion is α. The thermal stress in the rod is

(A) 0 (B) $\alpha\Delta T$ (C) $E\,\alpha\Delta T$ (D) $E\,\alpha\Delta T\,L$

Q.14 For an underdamped harmonic oscillator, resonance

(A) occurs when excitation frequency is greater than undamped natural frequency
(B) occurs when excitation frequency is less than undamped natural frequency
(C) occurs when excitation frequency is equal to undamped natural frequency
(D) never occurs

Q.15 If a particular Fe-C alloy contains less than 0.83% carbon, it is called

(A) high speed steel
(B) hypoeutectoid steel
(C) hypereutectoid steel
(D) cast iron

Q.16 Which of the following engineering materials is the most suitable candidate for hot chamber die casting?

(A) low carbon steel
(B) titanium
(C) copper
(D) tin

Q.17 Which one of the following is a solid state joining process?

(A) gas tungsten arc welding
(B) resistance spot welding
(C) friction welding
(D) submerged arc welding

Q.18 In orthogonal turning of a low carbon steel bar of diameter 150 mm with uncoated carbide tool, the cutting velocity is 90 m/min. The feed is 0.24 mm/rev and the depth of cut is 2 mm. The chip thickness obtained is 0.48 mm. If the orthogonal rake angle is zero and the principal cutting edge angle is 90°, the shear angle in degree is

(A) 20.56
(B) 26.56
(C) 30.56
(D) 36.56

Q.19 Which type of motor is **NOT** used in axis or spindle drives of CNC machine tools?

(A) induction motor
(B) dc servo motor
(C) stepper motor
(D) linear servo motor

Q.20 Volume of a cube of side 'l' and volume of a sphere of radius 'r' are equal. Both the cube and the sphere are solid and of same material. They are being cast. The ratio of the solidification time of the cube to the same of the sphere is

(A) $\left(\frac{4\pi}{6}\right)^3\left(\frac{r}{l}\right)^6$
(B) $\left(\frac{4\pi}{6}\right)\left(\frac{r}{l}\right)^2$
(C) $\left(\frac{4\pi}{6}\right)^2\left(\frac{r}{l}\right)^3$
(D) $\left(\frac{4\pi}{6}\right)^2\left(\frac{r}{l}\right)^4$

Q. 21 to Q. 75 carry two marks each.

Q.21 If $y = x + \sqrt{x + \sqrt{x + \sqrt{x + \cdots \infty}}}$, then $y(2) =$

(A) 4 or 1 (B) 4 only (C) 1 only (D) undefined

Q.22 The area of a triangle formed by the tips of vectors $\bar{a}$, $\bar{b}$ and $\bar{c}$ is

(A) $\frac{1}{2}(\bar{a}-\bar{b})\cdot(\bar{a}-\bar{c})$ (B) $\frac{1}{2}\left|(\bar{a}-\bar{b})\times(\bar{a}-\bar{c})\right|$

(C) $\frac{1}{2}\left|\bar{a}\times\bar{b}\times\bar{c}\right|$ (D) $\frac{1}{2}(\bar{a}\times\bar{b})\cdot\bar{c}$

Q.23 The solution of $\frac{dy}{dx} = y^2$ with initial value $y(0) = 1$ is bounded in the interval

(A) $-\infty \le x \le \infty$ (B) $-\infty \le x \le 1$ (C) $x < 1, x > 1$ (D) $-2 \le x \le 2$

Q.24 If $F(s)$ is the Laplace transform of function $f(t)$, then Laplace transform of $\int_0^t f(\tau)\,d\tau$ is

(A) $\frac{1}{s}F(s)$ (B) $\frac{1}{s}F(s) - f(0)$ (C) $sF(s) - f(0)$ (D) $\int F(s)\,ds$

Q.25 A calculator has accuracy up to 8 digits after decimal place. The value of $\int_0^{2\pi} \sin x\,dx$ when evaluated using this calculator by trapezoidal method with 8 equal intervals, to 5 significant digits is

(A) 0.00000 (B) 1.0000 (C) 0.00500 (D) 0.00025

Q.26 Let X and Y be two independent random variables. Which one of the relations between expectation (E), variance (Var) and covariance (Cov) given below is **FALSE**?

(A) $E(XY) = E(X)E(Y)$ (B) $Cov(X,Y) = 0$

(C) $Var(X+Y) = Var(X) + Var(Y)$ (D) $E(X^2Y^2) = (E(X))^2(E(Y))^2$

Q.27 $\lim_{x\to 0} \frac{e^x - \left(1 + x + \frac{x^2}{2}\right)}{x^3} =$

(A) 0 (B) 1/6 (C) 1/3 (D) 1

Q.28 The number of linearly independent eigenvectors of $\begin{bmatrix} 2 & 1 \\ 0 & 2 \end{bmatrix}$ is

(A) 0 (B) 1 (C) 2 (D) infinite

Q.29 The inlet angle of runner blades of a Francis turbine is 90°. The blades are so shaped that the tangential component of velocity at blade outlet is zero. The flow velocity remains constant throughout the blade passage and is equal to half of the blade velocity at runner inlet. The blade efficiency of the runner is

(A) 25% (B) 50% (C) 80% (D) 89%

Q.30 The temperature distribution within the thermal boundary layer over a heated isothermal flat plate is given by $\frac{T-T_w}{T_\infty - T_w} = \frac{3}{2}\left(\frac{y}{\delta_t}\right) - \frac{1}{2}\left(\frac{y}{\delta_t}\right)^3$, where T_w and T_∞ are the temperatures of plate and free stream respectively, and y is the normal distance measured from the plate. The local Nusselt number based on the thermal boundary layer thickness δ_t is given by

(A) 1.33 (B) 1.50 (C) 2.0 (D) 4.64

Q.31 In a counterflow heat exchanger, hot fluid enters at 60°C and cold fluid leaves at 30°C. Mass flow rate of the hot fluid is 1 kg/s and that of the cold fluid is 2 kg/s. Specific heat of the hot fluid is 10 kJ/kgK and that of the cold fluid is 5 kJ/kgK. The Log Mean Temperature Difference (LMTD) for the heat exchanger in ^{0}C is

(A) 15 (B) 30 (C) 35 (D) 45

Q.32 The average heat transfer coefficient on a thin hot vertical plate suspended in still air can be determined from observations of the change in plate temperature with time as it cools. Assume the plate temperature to be uniform at any instant of time and radiation heat exchange with the surroundings negligible. The ambient temperature is 25°C, the plate has a total surface area of 0.1 m^2 and a mass of 4 kg. The specific heat of the plate material is 2.5 kJ/kgK. The convective heat transfer coefficient in W/m^2K, at the instant when the plate temperature is 225°C and the change in plate temperature with time dT/dt = –0.02 K/s, is

(A) 200 (B) 20 (C) 15 (D) 10

Q.33 A model of a hydraulic turbine is tested at a head of $1/4^{th}$ of that under which the full scale turbine works. The diameter of the model is half of that of the full scale turbine. If N is the RPM of the full scale turbine, then the RPM of the model will be

(A) N/4 (B) N/2 (C) N (D) 2N

Q.34 The stroke and bore of a four stroke spark ignition engine are 250 mm and 200 mm respectively. The clearance volume is 0.001 m^3. If the specific heat ratio $\gamma = 1.4$, the air-standard cycle efficiency of the engine is

(A) 46.40% (B) 56.10% (C) 58.20% (D) 62.80%

Q.35 A building has to be maintained at 21°C (dry bulb) and 14.5°C (wet bulb). The dew point temperature under these conditions is 10.17°C. The outside temperature is −23°C (dry bulb) and the internal and external surface heat transfer coefficients are 8 W/m^2K and 23 W/m^2K respectively. If the building wall has a thermal conductivity of 1.2 W/mK, the minimum thickness (in m) of the wall required to prevent condensation is

(A) 0.471 (B) 0.407 (C) 0.321 (D) 0.125

Q.36 Atmospheric air at a flow rate of 3 kg/s (on dry basis) enters a cooling and dehumidifying coil with an enthalpy of 85 kJ/kg of dry air and a humidity ratio of 19 grams/kg of dry air. The air leaves the coil with an enthalpy of 43 kJ/kg of dry air and a humidity ratio of 8 grams/kg of dry air. If the condensate water leaves the coil with an enthalpy of 67 kJ/kg, the required cooling capacity of the coil in kW is

(A) 75.0 (B) 123.8 (C) 128.2 (D) 159.0

Q.37 A heat transformer is a device that transfers a part of the heat, supplied to it at an intermediate temperature, to a high temperature reservoir while rejecting the remaining part to a low temperature heat sink. In such a heat transformer, 100 kJ of heat is supplied at 350 K. The maximum amount of heat in kJ that can be transferred to 400 K, when the rest is rejected to a heat sink at 300 K is

(A) 12.50 (B) 14.29 (C) 33.33 (D) 57.14

Q.38 Which combination of the following statements is correct?

The incorporation of reheater in a steam power plant:

P: always increases the thermal efficiency of the plant.
Q: always increases the dryness fraction of steam at condenser inlet.
R: always increases the mean temperature of heat addition.
S: always increases the specific work output.

(A) P and S (B) Q and S (C) P,R and S (D) P,Q,R and S

Q.39 Which combination of the following statements is correct?

P: A gas cools upon expansion only when its Joule-Thomson coefficient is positive in the temperature range of expansion.

Q: For a system undergoing a process, its entropy remains constant only when the process is reversible.

R: The work done by a closed system in an adiabatic process is a point function.

S: A liquid expands upon freezing when the slope of its fusion curve on Pressure-Temperature diagram is negative.

(A) R and S
(B) P and Q
(C) Q, R and S
(D) P, Q and R

Q.40 Which combination of the following statements about steady incompressible forced vortex flow is correct?

P: Shear stress is zero at all points in the flow.

Q: Vorticity is zero at all points in the flow.

R: Velocity is directly proportional to the radius from the centre of the vortex.

S: Total mechanical energy per unit mass is constant in the entire flow field.

(A) P and Q
(B) R and S
(C) P and R
(D) P and S

Q.41 Match the items in columns I and II.

Column I	Column II
P: Centrifugal compressor	1: Axial flow
Q: Centrifugal pump	2: Surging
R: Pelton wheel	3: Priming
S: Kaplan turbine	4: Pure impulse

(A) P-2, Q-3, R-4, S-1
(B) P-2, Q-3, R-1, S-4
(C) P-3, Q-4, R-1, S-2
(D) P-1, Q-2, R-3, S-4

Q.42 A uniformly loaded propped cantilever beam and its free body diagram are shown below. The reactions are

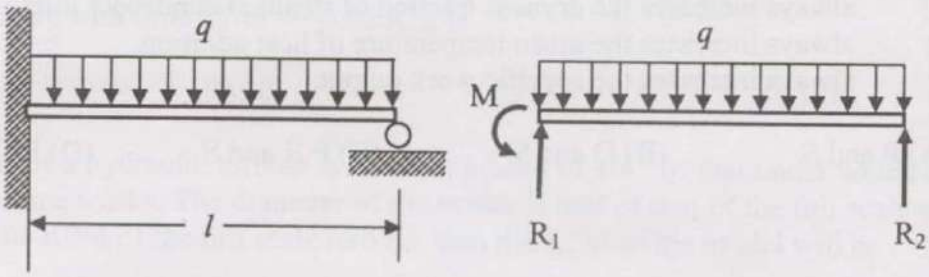

(A) $R_1 = \frac{5ql}{8}, R_2 = \frac{3ql}{8}, M = \frac{ql^2}{8}$

(B) $R_1 = \frac{3ql}{8}, R_2 = \frac{5ql}{8}, M = \frac{ql^2}{8}$

(C) $R_1 = \frac{5ql}{8}, R_2 = \frac{3ql}{8}, M = 0$

(D) $R_1 = \frac{3ql}{8}, R_2 = \frac{5ql}{8}, M = 0$

Q.43 A block of mass M is released from point P on a rough inclined plane with inclination angle θ, shown in the figure below. The coefficient of friction is μ. If $\mu < \tan\theta$, then the time taken by the block to reach another point Q on the inclined plane, where PQ = s, is

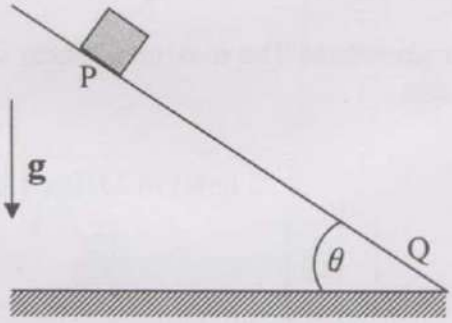

(A) $\sqrt{\dfrac{2s}{g\cos\theta(\tan\theta-\mu)}}$ (B) $\sqrt{\dfrac{2s}{g\cos\theta(\tan\theta+\mu)}}$

(C) $\sqrt{\dfrac{2s}{g\sin\theta(\tan\theta-\mu)}}$ (D) $\sqrt{\dfrac{2s}{g\sin\theta(\tan\theta+\mu)}}$

Q.44 A 200 x 100 x 50 mm steel block is subjected to a hydrostatic pressure of 15 MPa. The Young's modulus and Poisson's ratio of the material are 200 GPa and 0.3 respectively. The change in the volume of the block in mm^3 is

(A) 85 (B) 90 (C) 100 (D) 110

Q.45 A stepped steel shaft shown below is subjected to 10 Nm torque. If the modulus of rigidity is 80 GPa, the strain energy in the shaft in N mm is

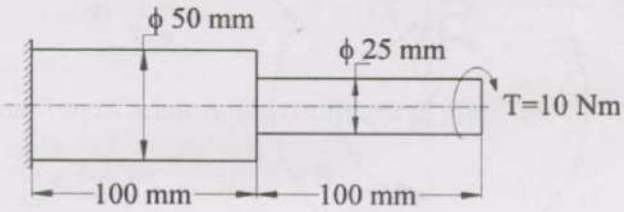

(A) 4.12 (B) 3.46 (C) 1.73 (D) 0.86

Q.46 A thin spherical pressure vessel of 200 mm diameter and 1 mm thickness is subjected to an internal pressure varying from 4 to 8 MPa. Assume that the yield, ultimate, and endurance strength of material are 600, 800 and 400 MPa respectively. The factor of safety as per Goodman's relation is

(A) 2.0 (B) 1.6 (C) 1.4 (D) 1.2

Q.47 A natural feed journal bearing of diameter 50 mm and length 50 mm operating at 20 revolution/second carries a load of 2.0 kN. The lubricant used has a viscosity of 20 mPa s. The radial clearance is 50 μm. The Sommerfeld number for the bearing is

(A) 0.062 (B) 0.125 (C) 0.250 (D) 0.785

Q.48 A bolted joint is shown below. The maximum shear stress, in MPa, in the bolts at *A* and *B*, respectively are

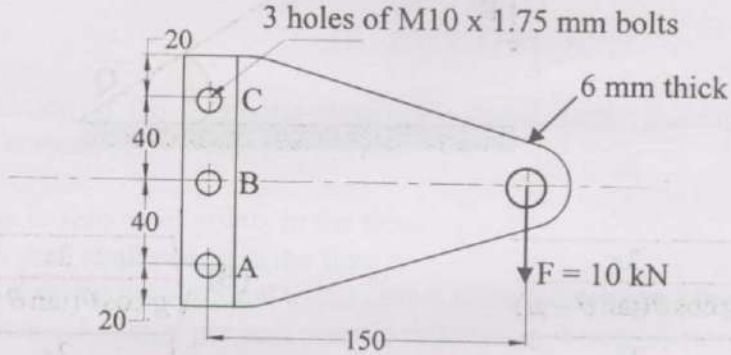

(all dimensions in the figure are in mm)

(A) 242.6, 42.5 (B) 42.5, 242.6
(C) 42.5, 42.5 (D) 242.6, 242.6

Q.49 A block-brake shown below has a face width of 300 mm and a mean coefficient of friction of 0.25. For an activating force of 400 N, the braking torque in Nm is

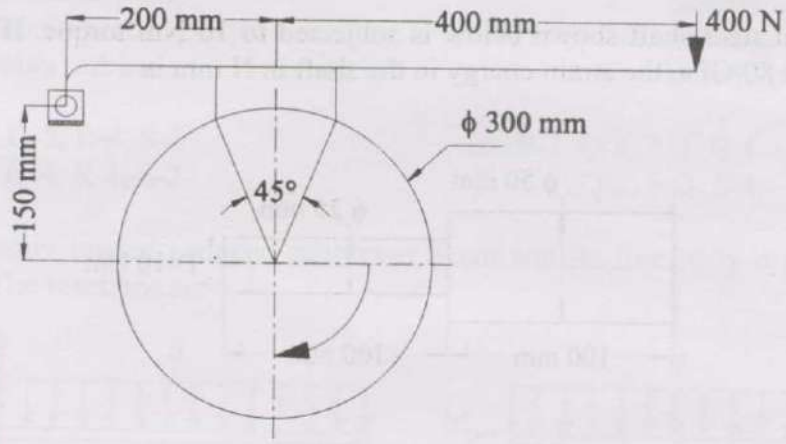

(A) 30 (B) 40 (C) 45 (D) 60

Q.50 The input link O_2P of a four bar linkage is rotated at 2 rad/s in counter clockwise direction as shown below. The angular velocity of the coupler PQ in rad/s, at an instant when $\angle O_4O_2P = 180^0$, is

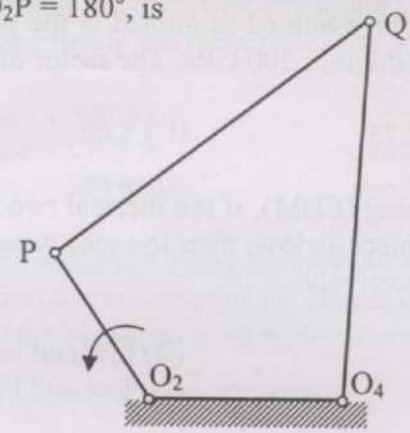

$PQ = O_4Q = \sqrt{2}\,a$
$O_2P = O_2O_4 = a$

(A) 4 (B) $2\sqrt{2}$ (C) 1 (D) $1/\sqrt{2}$

Q.51 The speed of an engine varies from 210 rad/s to 190 rad/s. During a cycle the change in kinetic energy is found to be 400 Nm. The inertia of the flywheel in kgm^2 is

(A) 0.10 (B) 0.20 (C) 0.30 (D) 0.40

Q.52 The natural frequency of the system shown below is

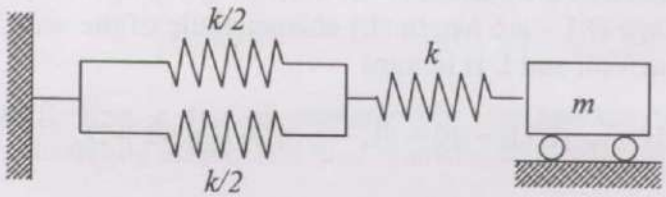

(A) $\sqrt{\frac{k}{2m}}$ (B) $\sqrt{\frac{k}{m}}$ (C) $\sqrt{\frac{2k}{m}}$ (D) $\sqrt{\frac{3k}{m}}$

Q.53 The equation of motion of a harmonic oscillator is given by

$$\frac{d^2x}{dt^2} + 2\zeta\omega_n \frac{dx}{dt} + \omega_n^2 x = 0,$$

and the initial conditions at $t = 0$ are $x(0) = X, \frac{dx}{dt}(0) = 0$. The amplitude of $x(t)$ after n complete cycles is

(A) $Xe^{-2n\pi\left(\frac{\zeta}{\sqrt{1-\zeta^2}}\right)}$ (B) $Xe^{2n\pi\left(\frac{\zeta}{\sqrt{1-\zeta^2}}\right)}$

(C) $Xe^{-2n\pi\left(\frac{\sqrt{1-\zeta^2}}{\zeta}\right)}$ (D) X

Q.54 The piston rod of diameter 20 mm and length 700 mm in a hydraulic cylinder is subjected to a compressive force of 10 kN due to the internal pressure. The end conditions for the rod may be assumed as guided at the piston end and hinged at the other end. The Young's modulus is 200 GPa. The factor of safety for the piston rod is

(A) 0.68 (B) 2.75 (C) 5.62 (D) 11.0

Q.55 In electrodischarge machining (EDM), if the thermal conductivity of tool is high and the specific heat of work piece is low, then the tool wear rate and material removal rate are expected to be respectively

(A) high and high
(B) low and low
(C) high and low
(D) low and high

Q.56 In orthogonal turning of medium carbon steel, the specific machining energy is 2.0 J/mm^3. The cutting velocity, feed and depth of cut are 120 m/min, 0.2 mm/rev and 2 mm respectively. The main cutting force in N is

(A) 40 (B) 80 (C) 400 (D) 800

Q.57 A direct current welding machine with a linear power source characteristic provides open circuit voltage of 80 V and short circuit current of 800 A. During welding with the machine, the measured arc current is 500 A corresponding to an arc length of 5.0 mm and the measured arc current is 460 A corresponding to an arc length of 7.0 mm. The linear voltage (E) – arc length (L) characteristic of the welding arc can be given as (where E is in Volt and L is in mm)

(A) E = 20 + 2L (B) E = 20 + 8L (C) E = 80 + 2L (D) E = 80 + 8L

Q.58 A hole is specified as $40^{0.050}_{0.000}$ mm. The mating shaft has a clearance fit with minimum clearance of 0.01 mm. The tolerance on the shaft is 0.04 mm. The maximum clearance in mm between the hole and the shaft is

(A) 0.04 (B) 0.05 (C) 0.10 (D) 0.11

Q.59 In orthogonal turning of low carbon steel pipe with principal cutting edge angle of 90^0, the main cutting force is 1000 N and the feed force is 800 N. The shear angle is 25^0 and orthogonal rake angle is zero. Employing Merchant's theory, the ratio of friction force to normal force acting on the cutting tool is

(A) 1.56 (B) 1.25 (C) 0.80 (D) 0.64

Q.60 Two metallic sheets, each of 2.0 mm thickness, are welded in a lap joint configuration by resistance spot welding at a welding current of 10 kA and welding time of 10 millisecond. A spherical fusion zone extending up to the full thickness of each sheet is formed. The properties of the metallic sheets are given as :

ambient temperature = 293 K
melting temperature = 1793 K
latent heat of fusion = 300 kJ/kg
density = 7000 kg/m^3
specific heat = 800 J/kgK

Assume: (i) contact resistance along sheet-sheet interface is 500 micro-ohm and along electrode-sheet interface is zero; (ii) no conductive heat loss through the bulk sheet materials; and (iii) the complete weld fusion zone is at the melting temperature.

The melting efficiency (in %) of the process is

(A) 50.37 (B) 60.37 (C) 70.37 (D) 80.37

Q.61 Capacities of production of an item over 3 consecutive months in regular time are 100, 100 and 80 and in overtime are 20, 20 and 40. The demands over those 3 months are 90, 130 and 110. The cost of production in regular time and overtime are respectively Rs. 20 per item and Rs. 24 per item. Inventory carrying cost is Rs. 2 per item per month. The levels of starting and final inventory are nil. Backorder is not permitted. For minimum cost of plan, the level of planned production in overtime in the third month is

(A) 40 (B) 30 (C) 20 (D) 0

Q.62 In open-die forging, a disc of diameter 200 mm and height 60 mm is compressed without any barreling effect. The final diameter of the disc is 400 mm. The true strain is

(A) 1.986 (B) 1.686 (C) 1.386 (D) 0.602

Q.63 The thickness of a metallic sheet is reduced from an initial value of 16 mm to a final value of 10 mm in one single pass rolling with a pair of cylindrical rollers each of diameter of 400 mm. The bite angle in degree will be

(A) 5.936 (B) 7.936 (C) 8.936 (D) 9.936

Q.64 Match the correct combination for following metal working processes.

	Processes		**Associated state of stress**
P.	Blanking	1.	Tension
Q.	Stretch Forming	2.	Compression
R.	Coining	3.	Shear
S.	Deep Drawing	4.	Tension and Compression
		5.	Tension and Shear

(A) P-2, Q-1, R-3, S-4
(B) P-3, Q-4, R-1, S-5
(C) P-5, Q-4, R-3, S-1
(D) P-3, Q-1, R-2, S-4

Q.65 A 200 mm long down sprue has an area of cross-section of 650 mm^2 where the pouring basin meets the down sprue (i.e. at the beginning of the down sprue). A constant head of molten metal is maintained by the pouring basin. The molten metal flow rate is 6.5×10^5 mm^3/s. Considering the end of down sprue to be open to atmosphere and an acceleration due to gravity of 10^4 mm/s^2, the area of the down sprue in mm^2 at its end (avoiding aspiration effect) should be

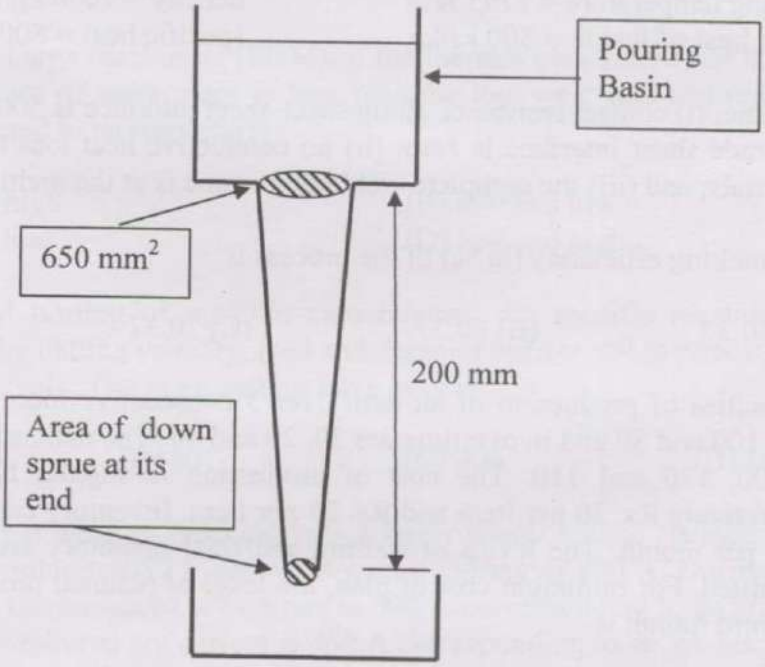

(A) 650.0 (B) 350.0 (C) 290.7 (D) 190.0

Q.66 The force requirement in a blanking operation of low carbon steel sheet is 5.0 kN. The thickness of the sheet is *'t'* and diameter of the blanked part is *'d'*. For the same work material, if the diameter of the blanked part is increased to 1.5 *d* and thickness is reduced to 0.4 *t*, the new blanking force in kN is

(A) 3.0 (B) 4.5 (C) 5.0 (D) 8.0

Q.67 Match the most suitable manufacturing processes for the following parts.

	Parts		Manufacturing Processes
P.	Computer chip	1.	Electrochemical Machining
Q.	Metal forming dies and molds	2.	Ultrasonic Machining
R.	Turbine blade	3.	Electrodischarge Machining
S.	Glass	4.	Photochemical Machining

(A) P-4, Q-3, R-1, S-2 (B) P-4, Q-3, R-2, S-1
(C) P-3, Q-1, R-4, S-2 (D) P-1, Q-2, R-4, S-3

Q.68 The maximum level of inventory of an item is 100 and it is achieved with infinite replenishment rate. The inventory becomes zero over one and half month due to consumption at a uniform rate. This cycle continues throughout the year. Ordering cost is Rs. 100 per order and inventory carrying cost is Rs. 10 per item per month. Annual cost (in Rs.) of the plan, neglecting material cost, is

(A) 800 (B) 2800 (C) 4800 (D) 6800

Q.69 In a machine shop, pins of 15 mm diameter are produced at a rate of 1000 per month and the same is consumed at a rate of 500 per month. The production and consumption continue simultaneously till the maximum inventory is reached. Then inventory is allowed to reduce to zero due to consumption. The lot size of production is 1000. If backlog is not allowed, the maximum inventory level is

(A) 400 (B) 500 (C) 600 (D) 700

Q.70 The net requirements of an item over 5 consecutive weeks are 50-0-15-20-20. The inventory carrying cost and ordering cost are Re. 1 per item per week and Rs. 100 per order respectively. Starting inventory is zero. Use "Least Unit Cost Technique" for developing the plan. The cost of the plan (in Rs.) is

(A) 200 (B) 250 (C) 255 (D) 260

Common Data Questions

Common Data for Questions 71,72,73:

A gear set has a pinion with 20 teeth and a gear with 40 teeth. The pinion runs at 30 rev/s and transmits a power of 20 kW. The teeth are on the 20^0 full-depth system and have a module of 5 mm. The length of the line of action is 19 mm.

Q.71 The center distance for the above gear set in mm is

(A) 140 (B) 150 (C) 160 (D) 170

Q.72 The contact ratio of the contacting tooth is

(A) 1.21 (B) 1.25 (C) 1.29 (D) 1.33

Q.73 The resultant force on the contacting gear tooth in N is

(A) 77.23 (B) 212.20 (C) 225.80 (D) 289.43

Common Data for Questions 74, 75:

A thermodynamic cycle with an ideal gas as working fluid is shown below.

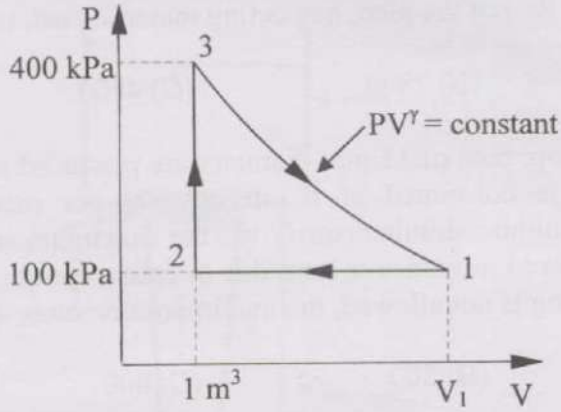

Q.74 The above cycle is represented on T-S plane by

(A)

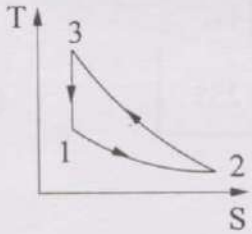

(B)

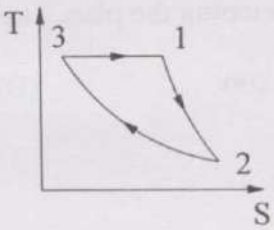

(C)

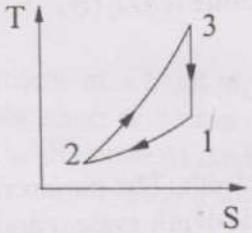

(D)

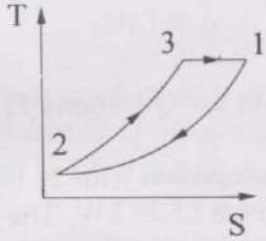

Q.75 If the specific heats of the working fluid are constant and the value of specific heat ratio γ is 1.4, the thermal efficiency (%) of the cycle is

(A) 21 (B) 40.9 (C) 42.6 (D) 59.7

Linked Answer Questions: Q.76 to Q.85 carry two marks each.

Statement for Linked Answer Questions 76 & 77:

Consider a steady incompressible flow through a channel as shown below.

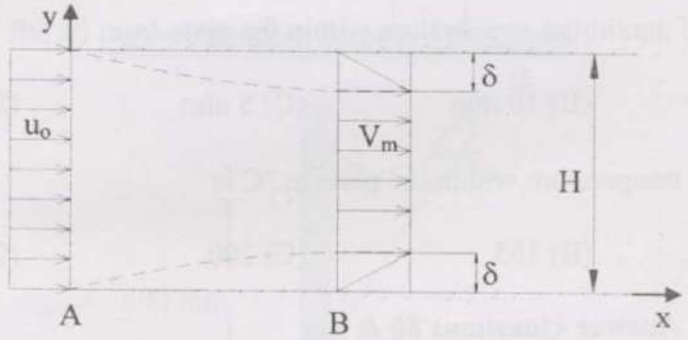

The velocity profile is uniform with a value of u_o at the inlet section A. The velocity profile at section B downstream is

$$u = \begin{cases} V_m \dfrac{y}{\delta}, & 0 \le y \le \delta \\ V_m, & \delta \le y \le H-\delta \\ V_m \dfrac{H-y}{\delta}, & H-\delta \le y \le H \end{cases}$$

Q.76 The ratio V_m/u_o is

(A) $\dfrac{1}{1-2(\delta/H)}$ (B) 1

(C) $\dfrac{1}{1-(\delta/H)}$ (D) $\dfrac{1}{1+(\delta/H)}$

Q.77 The ratio $\dfrac{p_A - p_B}{\frac{1}{2}\rho u_o^2}$ (where p_A and p_B are the pressures at section A and B, respectively, and ρ is the density of the fluid) is

(A) $\dfrac{1}{(1-(\delta/H))^2}-1$ (B) $\dfrac{1}{[1-(\delta/H)]^2}$

(C) $\dfrac{1}{(1-(2\delta/H))^2}-1$ (D) $\dfrac{1}{1+(\delta/H)}$

Statement for Linked Answer Questions 78 & 79:

Consider steady one-dimensional heat flow in a plate of 20 mm thickness with a uniform heat generation of 80 MW/m^3. The left and right faces are kept at constant temperatures of 160°C and 120°C respectively. The plate has a constant thermal conductivity of 200 W/mK.

Q.78 The location of maximum temperature within the plate from its left face is

(A) 15 mm (B) 10 mm (C) 5 mm (D) 0 mm

Q.79 The maximum temperature within the plate in °C is

(A) 160 (B) 165 (C) 200 (D) 250

Statement for Linked Answer Questions 80 & 81:

A machine frame shown in the figure below is subjected to a horizontal force of 600 N parallel to *z*-direction.

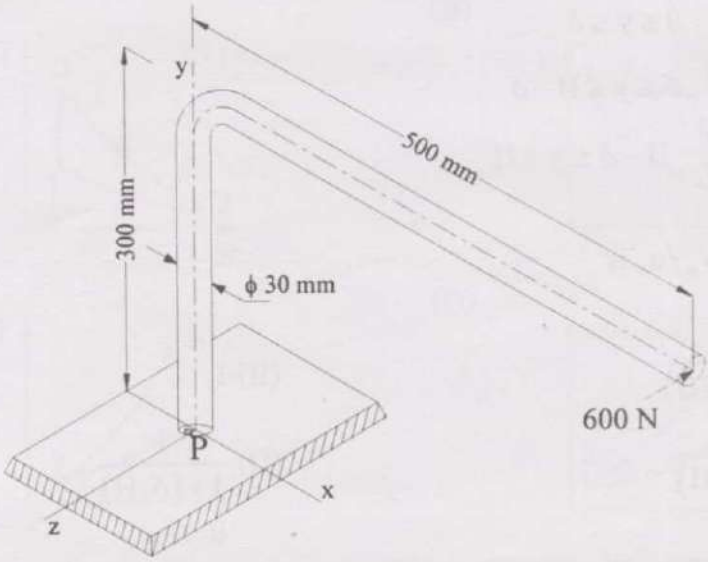

Q.80 The normal and shear stresses in MPa at point P are respectively

(A) 67.9 and 56.6
(B) 56.6 and 67.9
(C) 67.9 and 0.0
(D) 0.0 and 56.6

Q.81 The maximum principal stress in MPa and the orientation of the corresponding principal plane in degrees are respectively

(A) –32.0 and –29.52
(B) 100.0 and 60.48
(C) –32.0 and 60.48
(D) 100.0 and –29.52

Statement for Linked Answer Questions 82 & 83:

A quick return mechanism is shown below. The crank OS is driven at 2 rev/s in counter-clockwise direction.

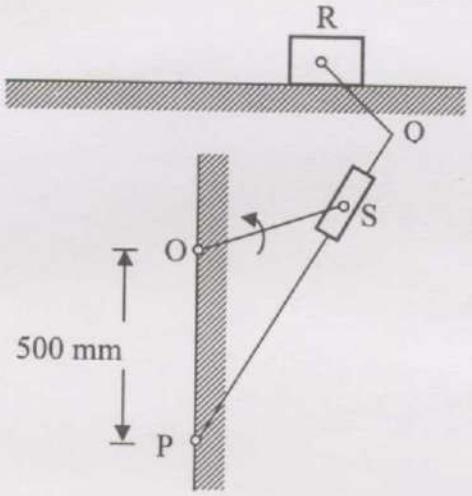

Q.82 If the quick return ratio is 1:2, then the length of the crank in mm is

(A) 250 (B) $250\sqrt{3}$ (C) 500 (D) $500\sqrt{3}$

Q.83 The angular speed of PQ in rev/s when the block R attains maximum speed during forward stroke (stroke with slower speed) is

(A) 1/3 (B) 2/3 (C) 2 (D) 3

Statement for Linked Answer Questions 84 & 85:

A low carbon steel bar of 147 mm diameter with a length of 630 mm is being turned with uncoated carbide insert. The observed tool lives are 24 min and 12 min for cutting velocities of 90 m/min and 120 m/min respectively. The feed and depth of cut are 0.2 mm/rev and 2 mm respectively. Use the unmachined diameter to calculate the cutting velocity.

Q.84 When tool life is 20 min, the cutting velocity in m/min is

(A) 87 (B) 97 (C) 107 (D) 114

Q.85 Neglect over-travel or approach of the tool. When tool life is 20 min, the machining time in min for a single pass is

(A) 5 (B) 10 (C) 15 (D) 20

END OF THE QUESTION PAPER