Q. 1 – Q. 5 carry one mark each.

Q.1 Once the team of analysts identify the problem, we _____ in a better position to comment on the issue.

Which one of the following choices CANNOT fill the given blank?

(A) will be
(B) were to be
(C) are going to be
(D) might be

Q.2 A final examination is the _____ of a series of evaluations that a student has to go through.

(A) culmination
(B) consultation
(C) desperation
(D) insinuation

Q.3 If IMHO = JNIP; IDK = JEL; and SO = TP, then IDC = ____.

(A) JDE
(B) JED
(C) JDC
(D) JCD

Q.4 The product of three integers X, Y and Z is 192. Z is equal to 4 and P is equal to the average of X and Y. What is the minimum possible value of P?

(A) 6
(B) 7
(C) 8
(D) 9.5

Q.5 Are there enough seats here? There are _____ people here than I expected.

(A) many
(B) most
(C) least
(D) more

Q. 6 – Q. 10 carry two marks each.

Q.6 Fiscal deficit was 4% of the GDP in 2015 and that increased to 5% in 2016. If the GDP increased by 10% from 2015 to 2016, the percentage increase in the actual fiscal deficit is ___.

(A) 37.50 (B) 35.70 (C) 25.00 (D) 10.00

Q.7 Two pipes P and Q can fill a tank in 6 hours and 9 hours respectively, while a third pipe R can empty the tank in 12 hours. Initially, P and R are open for 4 hours. Then P is closed and Q is opened. After 6 more hours R is closed. The total time taken to fill the tank (in hours) is ____.

(A) 13.50 (B) 14.50 (C) 15.50 (D) 16.50

Q.8 While teaching a creative writing class in India, I was surprised at receiving stories from the students that were all set in distant places: in the American West with cowboys and in Manhattan penthouses with clinking ice cubes. This was, till an eminent Caribbean writer gave the writers in the once-colonised countries the confidence to see the shabby lives around them as worthy of being "told".

The writer of this passage is surprised by the creative writing assignments of his students, because _____.

(A) Some of the students had written stories set in foreign places
(B) None of the students had written stories set in India
(C) None of the students had written about ice cubes and cowboys
(D) Some of the students had written about ice cubes and cowboys

Q.9 Mola is a digital platform for taxis in a city. It offers three types of rides – Pool, Mini and Prime. The Table below presents the number of rides for the past four months. The platform earns one US dollar per ride. What is the percentage share of revenue contributed by Prime to the total revenues of Mola, for the entire duration?

Type	**Month**			
	January	**February**	**March**	**April**
Pool	170	320	215	190
Mini	110	220	180	70
Prime	75	180	120	90

(A) 16.24 (B) 23.97 (C) 25.86 (D) 38.74

Q.10 X is an online media provider. By offering unlimited and exclusive online content at attractive prices for a loyalty membership, X is almost forcing its customers towards its loyalty membership. If its loyalty membership continues to grow at its current rate, within the next eight years more households will be watching X than cable television.

Which one of the following statements can be inferred from the above paragraph?

(A) Most households that subscribe to X's loyalty membership discontinue watching cable television
(B) Non-members prefer to watch cable television
(C) Cable television operators don't subscribe to X's loyalty membership
(D) The X is cancelling accounts of non-members

END OF THE QUESTION PAPER

Q. 1 – Q. 25 carry one mark each.

Q.1 In matrix equation $[A]\{X\}=\{R\}$,

$$[A]=\begin{bmatrix}4 & 8 & 4\\ 8 & 16 & -4\\ 4 & -4 & 15\end{bmatrix},\ \{X\}=\begin{Bmatrix}2\\1\\4\end{Bmatrix} \text{ and } \{R\}=\begin{Bmatrix}32\\16\\64\end{Bmatrix}.$$

One of the eigenvalues of matrix $[A]$ is

(A) 4 (B) 8 (C) 15 (D) 16

Q.2 The directional derivative of the function $f(x,y)=x^2+y^2$ along a line directed from (0,0) to (1,1), evaluated at the point $x = 1$, $y = 1$ is

(A) $\sqrt{2}$ (B) 2 (C) $2\sqrt{2}$ (D) $4\sqrt{2}$

Q.3 The differential equation $\frac{dy}{dx}+4y=5$ is valid in the domain $0\le x\le 1$ with $y(0)=2.25$. The solution of the differential equation is

(A) $y=e^{-4x}+5$ (B) $y=e^{-4x}+1.25$

(C) $y=e^{4x}+5$ (D) $y=e^{4x}+1.25$

Q.4 An analytic function $f(z)$ of complex variable $z = x + iy$ may be written as $f(z) = u(x, y) + iv(x, y)$. Then, $u(x, y)$ and $v(x, y)$ must satisfy

(A) $\frac{\partial u}{\partial x} = \frac{\partial v}{\partial y}$ and $\frac{\partial u}{\partial y} = \frac{\partial v}{\partial x}$

(B) $\frac{\partial u}{\partial x} = \frac{\partial v}{\partial y}$ and $\frac{\partial u}{\partial y} = -\frac{\partial v}{\partial x}$

(C) $\frac{\partial u}{\partial x} = -\frac{\partial v}{\partial y}$ and $\frac{\partial u}{\partial y} = \frac{\partial v}{\partial x}$

(D) $\frac{\partial u}{\partial x} = -\frac{\partial v}{\partial y}$ and $\frac{\partial u}{\partial y} = -\frac{\partial v}{\partial x}$

Q.5 A rigid triangular body, PQR, with sides of equal length of 1 unit moves on a flat plane. At the instant shown, edge QR is parallel to the x-axis, and the body moves such that velocities of points P and R are V_P and V_R, in the x and y directions, respectively. The magnitude of the angular velocity of the body is

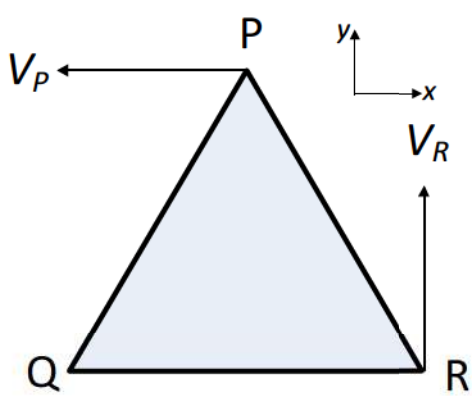

(A) $2V_R$ (B) $2V_P$ (C) $V_R/\sqrt{3}$ (D) $V_P/\sqrt{3}$

Q.6 Consider a linear elastic rectangular thin sheet of metal, subjected to uniform uniaxial tensile stress of 100 MPa along the length direction. Assume plane stress conditions in the plane normal to the thickness. The Young's modulus $E = 200$ MPa and Poisson's ratio $\nu = 0.3$ are given. The principal strains in the plane of the sheet are

(A) (0.35, −0.15) (B) (0.5, 0.0) (C) (0.5, −0.15) (D) (0.5, −0.5)

Q.7 A spur gear has pitch circle diameter D and number of teeth T. The circular pitch of the gear is

(A) $\frac{\pi D}{T}$ (B) $\frac{T}{D}$ (C) $\frac{D}{T}$ (D) $\frac{2\pi D}{T}$

Q.8 Endurance limit of a beam subjected to pure bending decreases with

(A) decrease in the surface roughness and decrease in the size of the beam

(B) increase in the surface roughness and decrease in the size of the beam

(C) increase in the surface roughness and increase in the size of the beam

(D) decrease in the surface roughness and increase in the size of the beam

Q.9 A two-dimensional incompressible frictionless flow field is given by $\vec{u} = x\hat{i} - y\hat{j}$. If ρ is the density of the fluid, the expression for pressure gradient vector at any point in the flow field is given as

(A) $\rho\left(x\hat{i} + y\hat{j}\right)$ (B) $-\rho\left(x\hat{i} + y\hat{j}\right)$

(C) $\rho\left(x\hat{i} - y\hat{j}\right)$ (D) $-\rho\left(x^2\hat{i} + y^2\hat{j}\right)$

Q.10 Sphere **1** with a diameter of 0.1 m is completely enclosed by another sphere **2** of diameter 0.4 m. The view factor $\mathbf{F_{12}}$ is

(A) 0.0625

(B) 0.25

(C) 0.5

(D) 1.0

Q.11 One-dimensional steady state heat conduction takes place through a solid whose cross-sectional area varies linearly in the direction of heat transfer. Assume there is no heat generation in the solid and the thermal conductivity of the material is constant and independent of temperature. The temperature distribution in the solid is

(A) Linear

(B) Quadratic

(C) Logarithmic

(D) Exponential

Q.12 For a simple compressible system, v, s, p and T are specific volume, specific entropy, pressure and temperature, respectively. As per Maxwell's relations, $\left(\frac{\partial v}{\partial s}\right)_p$ is equal to

(A) $\left(\frac{\partial s}{\partial T}\right)_p$

(B) $\left(\frac{\partial p}{\partial v}\right)_T$

(C) $-\left(\frac{\partial T}{\partial v}\right)_p$

(D) $\left(\frac{\partial T}{\partial p}\right)_s$

Q.13 Which one of the following modifications of the simple ideal Rankine cycle increases the thermal efficiency and reduces the moisture content of the steam at the turbine outlet?

(A) Increasing the boiler pressure.

(B) Decreasing the boiler pressure.

(C) Increasing the turbine inlet temperature.

(D) Decreasing the condenser pressure.

Q.14 Hardenability of steel is a measure of

(A) the ability to harden when it is cold worked

(B) the maximum hardness that can be obtained when it is austenitized and then quenched

(C) the depth to which required hardening is obtained when it is austenitized and then quenched

(D) the ability to retain its hardness when it is heated to elevated temperatures

Q.15 The fluidity of molten metal of cast alloys (without any addition of fluxes) increases with increase in

(A) viscosity (B) surface tension (C) freezing range (D) degree of superheat

Q.16 The cold forming process in which a hardened tool is pressed against a workpiece (when there is relative motion between the tool and the workpiece) to produce a roughened surface with a regular pattern is

(A) Roll forming (B) Strip rolling (C) Knurling (D) Chamfering

Q.17 The most common limit gage used for inspecting the hole diameter is

(A) Snap gage (B) Ring gage

(C) Plug gage (D) Master gage

Q.18 The transformation matrix for mirroring a point in x - y plane about the line $y = x$ is given by

(A) $\begin{bmatrix} 1 & 0 \\ 0 & -1 \end{bmatrix}$ (B) $\begin{bmatrix} -1 & 0 \\ 0 & 1 \end{bmatrix}$

(C) $\begin{bmatrix} 0 & 1 \\ 1 & 0 \end{bmatrix}$ (D) $\begin{bmatrix} 0 & -1 \\ -1 & 0 \end{bmatrix}$

Q.19 If x is the mean of data 3, x, 2 and 4, then the mode is____

Q.20 The figure shows an idealized plane truss. If a horizontal force of 300 N is applied at point A, then the magnitude of the force produced in member CD is _____ N.

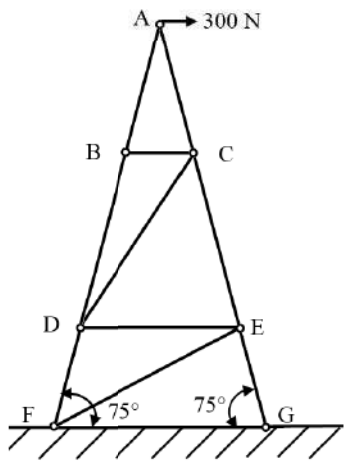

Q.21 The state of stress at a point in a component is represented by a Mohr's circle of radius 100 MPa centered at 200 MPa on the normal stress axis. On a plane passing through the same point, the normal stress is 260 MPa. The magnitude of the shear stress on the same plane at the same point is _____ MPa.

Q.22 A wire of circular cross-section of diameter 1.0 mm is bent into a circular arc of radius 1.0 m by application of pure bending moments at its ends. The Young's modulus of the material of the wire is 100 GPa. The maximum tensile stress developed in the wire is _____ MPa.

Q.23 Water enters a circular pipe of length L = 5.0 m and diameter D = 0.20 m with Reynolds number Re_D = 500. The velocity profile at the inlet of the pipe is uniform while it is parabolic at the exit. The Reynolds number at the exit of the pipe is _____.

Q.24 A thin vertical flat plate of height L, and infinite width perpendicular to the plane of the figure, is losing heat to the surroundings by natural convection. The temperatures of the plate and the surroundings, and the properties of the surrounding fluid, are constant. The relationship between the average Nusselt and Rayleigh numbers is given as $Nu = K\,Ra^{1/4}$, where K is a constant. The length scales for Nusselt and Rayleigh numbers are the height of the plate. The height of the plate is increased to $16L$ keeping all other factors constant.

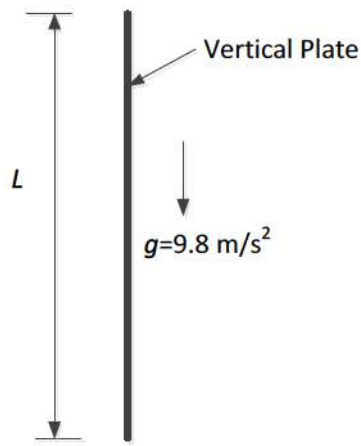

If the average heat transfer coefficient for the first plate is h_1 and that for the second plate is h_2, the value of the ratio h_1/h_2 is _____.

Q.25 In an electrical discharge machining process, the breakdown voltage across inter electrode gap (IEG) is 200 V and the capacitance of the RC circuit is 50 μF. The energy (in J) released per spark across the IEG is____

Q. 26 – Q. 55 carry two marks each.

Q.26 Given a vector $\vec{u} = \frac{1}{3}\left(-y^3\,\hat{i} + x^3\,\hat{j} + z^3\,\hat{k}\right)$ and $\hat{n}$ as the unit normal vector to the surface of the hemisphere ($x^2 + y^2 + z^2 = 1;\ z \geq 0$), the value of integral $\int (\nabla \times \vec{u}) \bullet\ \hat{n}\, dS$ evaluated on the curved surface of the hemisphere S is

(A) $-\frac{\pi}{2}$

(B) $\frac{\pi}{3}$

(C) $\frac{\pi}{2}$

(D) π

Q.27 A differential equation is given as

$$x^2 \frac{d^2y}{dx^2} - 2x\frac{dy}{dx} + 2y = 4.$$

The solution of the differential equation in terms of arbitrary constants C_1 and C_2 is

(A) $y = C_1 x^2 + C_2 x + 2$

(B) $y = \frac{C_1}{x^2} + C_2 x + 2$

(C) $y = C_1 x^2 + C_2 x + 4$

(D) $y = \frac{C_1}{x^2} + C_2 x + 4$

Q.28 The derivative of $f(x) = \cos(x)$ can be estimated using the approximation $f'(x) = \frac{f(x+h) - f(x-h)}{2h}$. The percentage error is calculated as $\left(\frac{\textit{Exact value} - \textit{Approximate value}}{\textit{Exact value}}\right) \times 100$. The percentage error in the derivative of $f(x)$ at $x = \pi/6$ radian, choosing $h = 0.1$ radian, is

(A) < 0.1 %

(B) > 0.1 % and < 1 %

(C) > 1 % and < 5 %

(D) > 5 %

Q.29 A ball of mass 3 kg moving with a velocity of 4 m/s undergoes a perfectly-elastic direct-central impact with a stationary ball of mass m. After the impact is over, the kinetic energy of the 3 kg ball is 6 J. The possible value(s) of m is/are

(A) 1 kg only (B) 6 kg only (C) 1 kg, 6 kg (D) 1 kg, 9 kg

Q.30 Consider two concentric circular cylinders of different materials M and N in contact with each other at $r = b$, as shown below. The interface at $r = b$ is frictionless. The composite cylinder system is subjected to internal pressure P. Let (u_r^M, u_θ^M) and $(\sigma_{rr}^M, \sigma_{\theta\theta}^M)$ denote the radial and tangential displacement and stress components, respectively, in material M. Similarly, (u_r^N, u_θ^N) and $(\sigma_{rr}^N, \sigma_{\theta\theta}^N)$ denote the radial and tangential displacement and stress components, respectively, in material N. The boundary conditions that need to be satisfied at the frictionless interface between the two cylinders are:

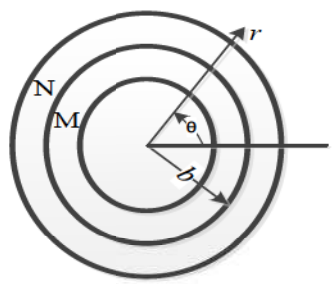

(A) $u_r^M = u_r^N$ and $\sigma_{rr}^M = \sigma_{rr}^N$ only

(B) $u_r^M = u_r^N$ and $\sigma_{rr}^M = \sigma_{rr}^N$ and $u_\theta^M = u_\theta^N$ and $\sigma_{\theta\theta}^M = \sigma_{\theta\theta}^N$

(C) $u_\theta^M = u_\theta^N$ and $\sigma_{\theta\theta}^M = \sigma_{\theta\theta}^N$ only

(D) $\sigma_{rr}^M = \sigma_{rr}^N$ and $\sigma_{\theta\theta}^M = \sigma_{\theta\theta}^N$ only

Q.31 A prismatic, straight, elastic, cantilever beam is subjected to a linearly distributed transverse load as shown below. If the beam length is L, Young's modulus E, and area moment of inertia I, the magnitude of the maximum deflection is

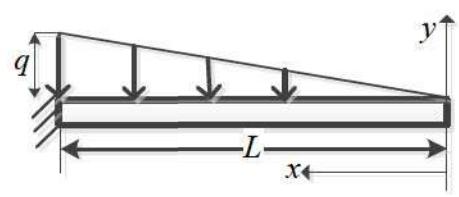

(A) $\frac{qL^4}{15EI}$ (B) $\frac{qL^4}{30EI}$ (C) $\frac{qL^4}{10EI}$ (D) $\frac{qL^4}{60EI}$

Q.32 A slender uniform rigid bar of mass m is hinged at O and supported by two springs, with stiffnesses $3k$ and k, and a damper with damping coefficient c, as shown in the figure. For the system to be critically damped, the ratio $c/\sqrt{km}$ should be

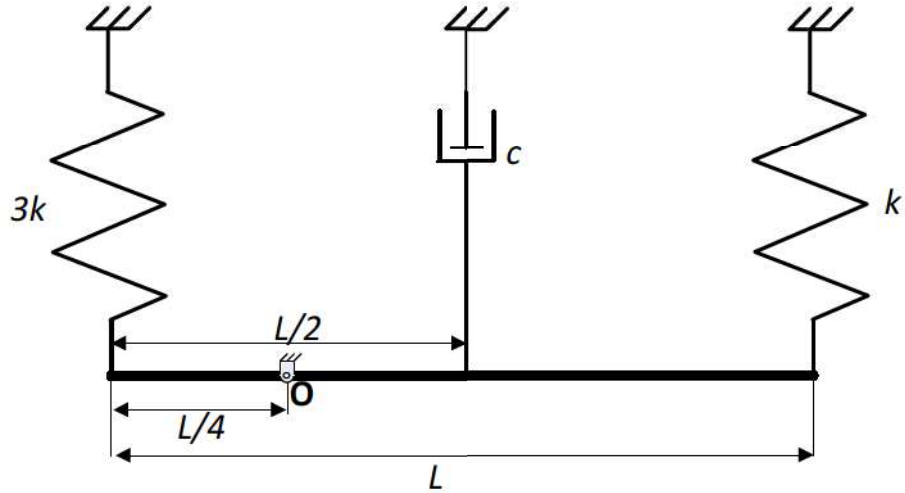

(A) 2 (B) 4 (C) $2\sqrt{7}$ (D) $4\sqrt{7}$

Q.33 The figure shows a heat engine (HE) working between two reservoirs. The amount of heat (Q_2) rejected by the heat engine is drawn by a heat pump (HP). The heat pump receives the entire work output (W) of the heat engine. If temperatures, $T_1 > T_3 > T_2$, then the relation between the efficiency (η) of the heat engine and the coefficient of performance (COP) of the heat pump is

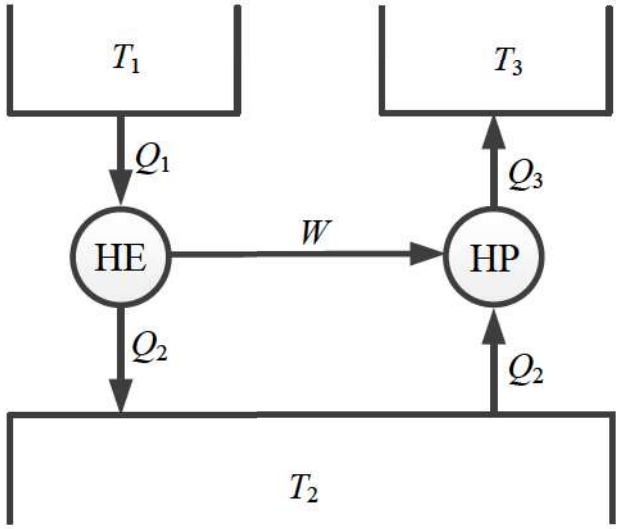

(A) COP $= \eta$

(B) COP $= 1 + \eta$

(C) COP $= \eta^{-1}$

(D) COP $= \eta^{-1} - 1$

Q.34 The binary phase diagram of metals P and Q is shown in the figure. An alloy X containing 60% P and 40% Q (by weight) is cooled from liquid to solid state. The fractions of solid and liquid (in weight percent) at 1250 °C, respectively, will be

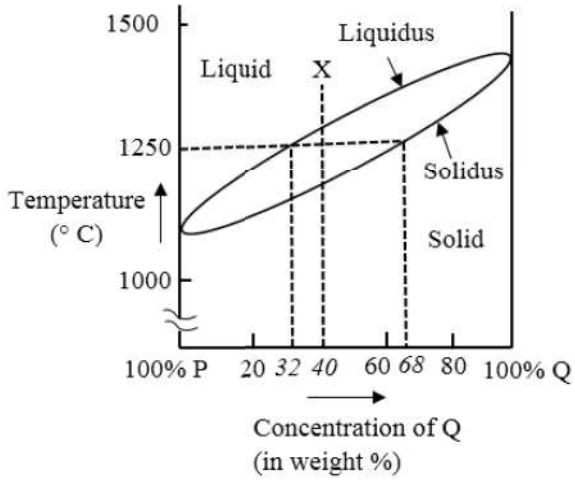

(A) 77.8% and 22.2%

(B) 22.2% and 77.8%

(C) 68.0% and 32.0%

(D) 32.0% and 68.0%

Q.35 The activities of a project, their duration and the precedence relationships are given in the table. For example, in a precedence relationship "X < Y, Z" means that X is predecessor of activities Y and Z. The time to complete the activities along the critical path is _____ weeks.

Activity	Duration (Weeks)	Precedence Relationship
A	5	A < B, C, D
B	7	B < E, F, G
C	10	C < I
D	6	D < G
E	3	E < H
F	9	F < I
G	7	G < I
H	4	H < I
I	2	----

(A) 17

(B) 21

(C) 23

(D) 25

Q.36 The crank of a slider-crank mechanism rotates counter-clockwise (CCW) with a constant angular velocity ω, as shown. Assume the length of the crank to be r.

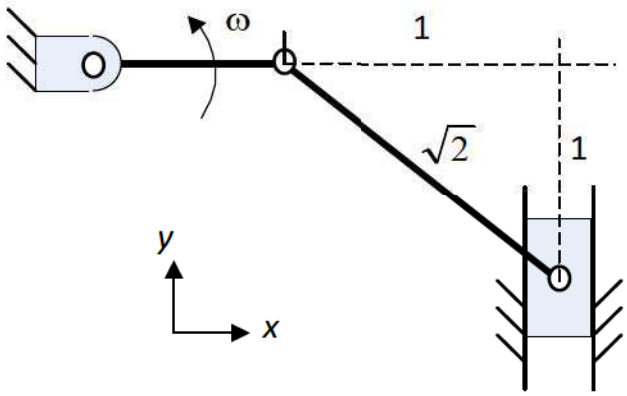

Using exact analysis, the acceleration of the slider in the y-direction, at the instant shown, where the crank is parallel to x-axis, is given by

(A) $-\omega^2 r$ (B) $2\omega^2 r$ (C) $\omega^2 r$ (D) $-2\omega^2 r$

Q.37 A horizontal cantilever beam of circular cross-section, length 1.0 m and flexural rigidity $EI = 200$ N·m^2 is subjected to an applied moment $M_A = 1.0$ N·m at the free end as shown in the figure. The magnitude of the vertical deflection of the free end is _____ mm (round off to one decimal place).

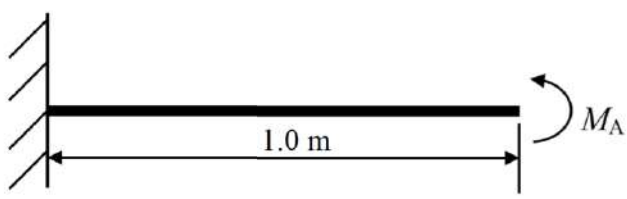

Q.38 Two masses A and B having mass m_a and m_b, respectively, lying in the plane of the figure shown, are rigidly attached to a shaft which revolves about an axis through O perpendicular to the plane of the figure. The radii of rotation of the masses m_a and m_b are r_a and r_b, respectively. The angle between lines OA and OB is 90°. If m_a = 10 kg, m_b = 20 kg, r_a = 200 mm and r_b = 400 mm, then the balance mass to be placed at a radius of 200 mm is _____ kg (round off to two decimal places).

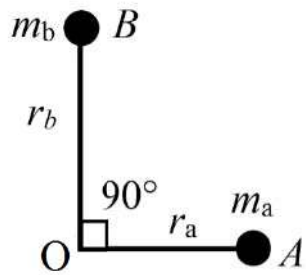

Q.39 A four bar mechanism is shown in the figure. The link numbers are mentioned near the links. Input link 2 is rotating anticlockwise with a constant angular speed ω_2. Length of different links are:

$$O_2O_4 = O_2A = L,$$
$$AB = O_4B = \sqrt{2}L.$$

The magnitude of the angular speed of the output link 4 is ω_4 at the instant when link 2 makes an angle of 90° with O_2O_4 as shown. The ratio $\frac{\omega_4}{\omega_2}$ is _____ (round off to two decimal places).

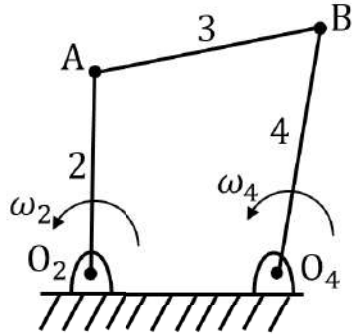

Q.40 The probability that a part manufactured by a company will be defective is 0.05. If 15 such parts are selected randomly and inspected, then the probability that at least two parts will be defective is _____ (round off to two decimal places).

Q.41 A uniform disc with radius r and a mass of m kg is mounted centrally on a horizontal axle of negligible mass and length of $1.5r$. The disc spins counter-clockwise about the axle with angular speed ω, when viewed from the right-hand side bearing, Q. The axle precesses about a vertical axis at $\omega_p = \omega / 10$ in the clockwise direction when viewed from above. Let R_P and R_Q (positive upwards) be the resultant reaction forces due to the mass and the gyroscopic effect, at bearings P and Q, respectively. Assuming $\omega^2 r = 300\ \mathrm{m/s^2}$ and $g = 10\ \mathrm{m/s^2}$, the ratio of the larger to the smaller bearing reaction force (considering appropriate signs) is _____

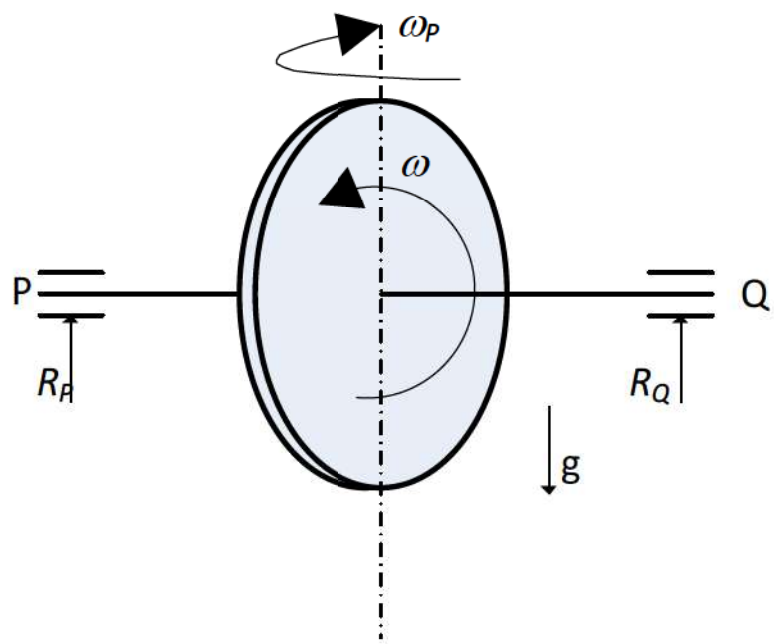

Q.42 A short shoe external drum brake is shown in the figure. The diameter of the brake drum is 500 mm. The dimensions a = 1000 mm, b = 500 mm and c = 200 mm. The coefficient of friction between the drum and the shoe is 0.35. The force applied on the lever F = 100 N as shown in the figure. The drum is rotating anti-clockwise. The braking torque on the drum is _____ N·m (round off to two decimal places).

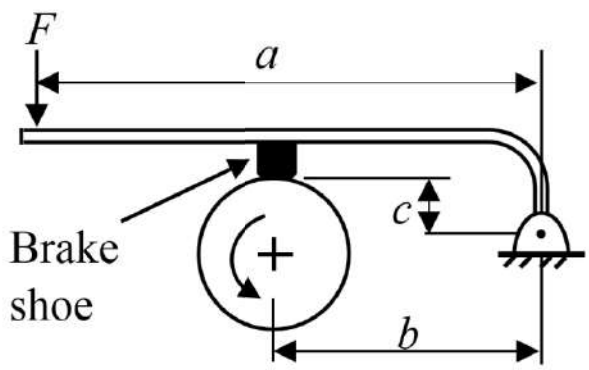

Q.43 Water flows through two different pipes **A** and **B** of the same circular cross-section but at different flow rates. The length of pipe **A** is 1.0 m and that of pipe **B** is 2.0 m. The flow in both the pipes is laminar and fully developed. If the frictional head loss across the length of the pipes is same, the ratio of volume flow rates Q_B/Q_A is _____ (round off to two decimal places).

Q.44 The aerodynamic drag on a sports car depends on its shape. The car has a drag coefficient of 0.1 with the windows and the roof closed. With the windows and the roof open, the drag coefficient becomes 0.8. The car travels at 44 km/h with the windows and roof closed. For the same amount of power needed to overcome the aerodynamic drag, the speed of the car with the windows and roof open (round off to two decimal places), is _____ km/h (The density of air and the frontal area may be assumed to be constant).

Q.45 Three sets of parallel plates LM, NR and PQ are given in Figures 1, 2 and 3. The view factor F_{IJ} is defined as the fraction of radiation leaving plate *I* that is intercepted by plate *J*. Assume that the values of F_{LM} and F_{NR} are 0.8 and 0.4, respectively. The value of F_{PQ} (round off to one decimal place) is _____.

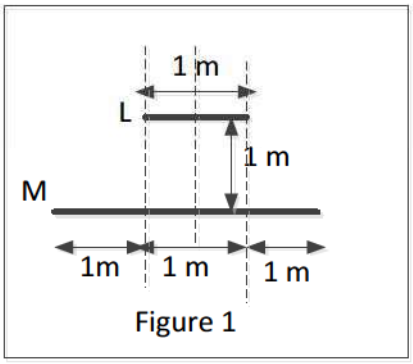

Figure 1

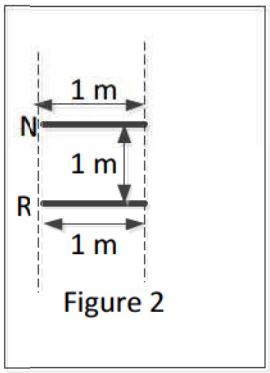

Figure 2

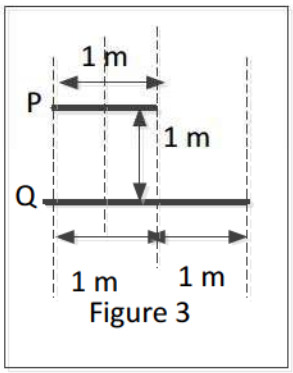

Figure 3

Q.46 Hot and cold fluids enter a parallel flow double tube heat exchanger at 100 °C and 15 °C, respectively. The heat capacity rates of hot and cold fluids are C_h = 2000 W/K and C_c = 1200 W/K, respectively. If the outlet temperature of the cold fluid is 45 °C, the log mean temperature difference (LMTD) of the heat exchanger is _____ K (round off to two decimal places).

Q.47 Water flowing at the rate of 1 kg/s through a system is heated using an electric heater such that the specific enthalpy of the water increases by 2.50 kJ/kg and the specific entropy increases by 0.007 kJ/kg·K. The power input to the electric heater is 2.50 kW. There is no other work or heat interaction between the system and the surroundings. Assuming an ambient temperature of 300 K, the irreversibility rate of the system is _____ kW (round off to two decimal places).

Q.48 An idealized centrifugal pump (blade outer radius of 50 mm) consumes 2 kW power while running at 3000 rpm. The entry of the liquid into the pump is axial and exit from the pump is radial with respect to impeller. If the losses are neglected, then the mass flow rate of the liquid through the pump is _____ kg/s (round off to two decimal places).

Q.49 An air standard Otto cycle has thermal efficiency of 0.5 and the mean effective pressure of the cycle is 1000 kPa. For air, assume specific heat ratio $\gamma = 1.4$ and specific gas constant R = 0.287 kJ/kg·K. If the pressure and temperature at the beginning of the compression stroke are 100 kPa and 300 K, respectively, then the specific net work output of the cycle is _____ kJ/kg (round off to two decimal places).

Q.50 The figure shows a pouring arrangement for casting of a metal block. Frictional losses are negligible. The acceleration due to gravity is 9.81 m/s^2. The time (in s, round off to two decimal places) to fill up the mold cavity (of size 40 cm × 30 cm × 15 cm) is____

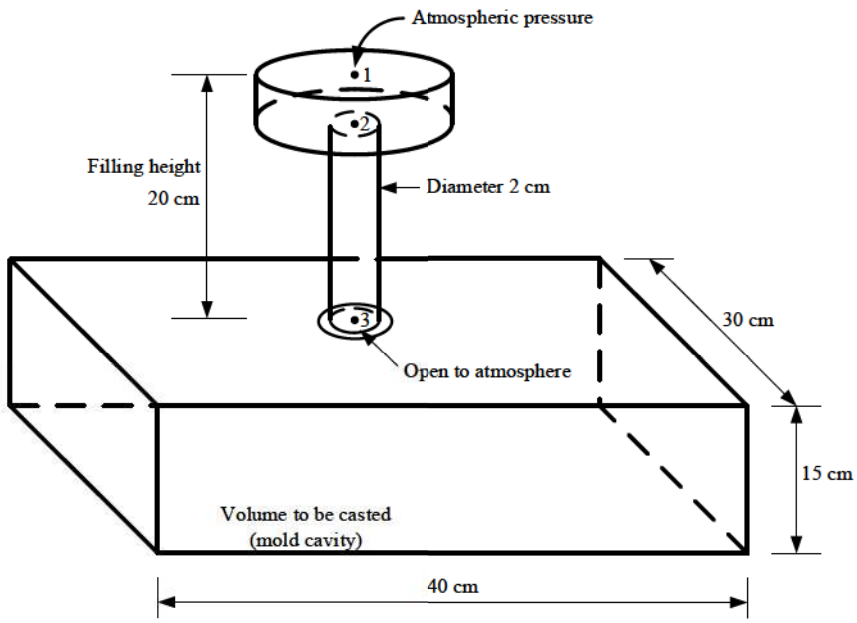

Q.51 A gas tungsten arc welding operation is performed using a current of 250 A and an arc voltage of 20 V at a welding speed of 5 mm/s. Assuming that the arc efficiency is 70%, the net heat input per unit length of the weld will be _____ kJ/mm (round off to one decimal place).

Q.52 The thickness of a sheet is reduced by rolling (without any change in width) using 600 mm diameter rolls. Neglect elastic deflection of the rolls and assume that the coefficient of friction at the roll-workpiece interface is 0.05. The sheet enters the rotating rolls unaided. If the initial sheet thickness is 2 mm, the minimum possible final thickness that can be produced by this process in a single pass is _____ mm (round off to two decimal places).

Q.53 A through hole is drilled in an aluminum alloy plate of 15 mm thickness with a drill bit of diameter 10 mm, at a feed of 0.25 mm/rev and a spindle speed of 1200 rpm. If the specific energy required for cutting this material is 0.7 $N \cdot m/mm^3$, the power required for drilling is _____ W (round off to two decimal places).

Q.54 In an orthogonal machining with a single point cutting tool of rake angle 10°, the uncut chip thickness and the chip thickness are 0.125 mm and 0.22 mm, respectively. Using Merchant's first solution for the condition of minimum cutting force, the coefficient of friction at the chip-tool interface is _____ (round off to two decimal places).

Q.55 The annual demand of valves per year in a company is 10,000 units. The current order quantity is 400 valves per order. The holding cost is Rs. 24 per valve per year and the ordering cost is Rs. 400 per order. If the current order quantity is changed to Economic Order Quantity, then the saving in the total cost of inventory per year will be Rs. _____ (round off to two decimal places).

END OF THE QUESTION PAPER

Q.No.	Type	Section	Key	Marks
1	MCQ	GA	B	1
2	MCQ	GA	A	1
3	MCQ	GA	B	1
4	MCQ	GA	Mark to All	1
5	MCQ	GA	D	1
6	MCQ	GA	A	2
7	MCQ	GA	B	2
8	MCQ	GA	B	2
9	MCQ	GA	B	2
10	MCQ	GA	A	2
1	MCQ	ME	D	1
2	MCQ	ME	C	1
3	MCQ	ME	B	1
4	MCQ	ME	B	1
5	MCQ	ME	A	1
6	MCQ	ME	C	1
7	MCQ	ME	A	1
8	MCQ	ME	C	1
9	MCQ	ME	B	1
10	MCQ	ME	D	1
11	MCQ	ME	C	1
12	MCQ	ME	D	1

Q.No.	Type	Section	Key	Marks
13	MCQ	ME	C	1
14	MCQ	ME	C	1
15	MCQ	ME	D	1
16	MCQ	ME	C	1
17	MCQ	ME	C	1
18	MCQ	ME	C	1
19	NAT	ME	3 to 3	1
20	NAT	ME	0 to 0	1
21	NAT	ME	79 to 81	1
22	NAT	ME	49 to 51	1
23	NAT	ME	500 to 500	1
24	NAT	ME	2 to 2	1
25	NAT	ME	1 to 1	1
26	MCQ	ME	C	2
27	MCQ	ME	A	2
28	MCQ	ME	B	2
29	MCQ	ME	D	2
30	MCQ	ME	A	2
31	MCQ	ME	B	2
32	MCQ	ME	D	2
33	MCQ	ME	C	2
34	MCQ	ME	B	2

Q.No.	Type	Section	Key	Marks
35	MCQ	ME	C	2
36	MCQ	ME	C	2
37	NAT	ME	2.4 to 2.6	2
38	NAT	ME	41.00 to 42.00	2
39	NAT	ME	0.78 to 0.80	2
40	NAT	ME	0.16 to 0.18	2
41	NAT	ME	-3 to -3	2
42	NAT	ME	19.00 to 21.00	2
43	NAT	ME	0.48 to 0.52	2
44	NAT	ME	21.90 to 22.20	2
45	NAT	ME	0.6 to 0.6	2
46	NAT	ME	57.00 to 58.00	2
47	NAT	ME	2.05 to 2.15	2
48	NAT	ME	8.00 to 8.20	2
49	NAT	ME	705.00 to 715.00	2
50	NAT	ME	28.80 to 29.00	2
51	NAT	ME	0.7 to 0.7	2
52	NAT	ME	1.24 to 1.26	2
53	NAT	ME	274.00 to 276.00	2
54	NAT	ME	0.72 to 0.76	2
55	NAT	ME	941.00 to 946.00	2