Mechanical Engineering (ME, Set-2)

General Aptitude (GA)

Q.1 – Q.5 Multiple Choice Question (MCQ), carry ONE mark each (for each wrong answer: – 1/3).

Q.1	**Five persons P, Q, R, S and T are to be seated in a row, all facing the same direction, but not necessarily in the same order. P and T cannot be seated at either end of the row. P should not be seated adjacent to S. R is to be seated at the second position from the left end of the row. The number of distinct seating arrangements possible is:**
(A)	2
(B)	3
(C)	4
(D)	5

Q.2	**Consider the following sentences:** **(i) The number of candidates who appear for the GATE examination is staggering.** **(ii) A number of candidates from my class are appearing for the GATE examination.** **(iii) The number of candidates who appear for the GATE examination are staggering.** **(iv) A number of candidates from my class is appearing for the GATE examination.** **Which of the above sentences are grammatically CORRECT?**
(A)	(i) and (ii)
(B)	(i) and (iii)
(C)	(ii) and (iii)
(D)	(ii) and (iv)

Q.3	**A digital watch X beeps every 30 seconds while watch Y beeps every 32 seconds. They beeped together at 10 AM.** **The immediate next time that they will beep together is _____**
(A)	10.08 AM
(B)	10.42 AM
(C)	11.00 AM
(D)	10.00 PM

Q.4	**If** $\oplus \div \odot = 2$; $\oplus \div \Delta = 3$; $\odot + \Delta = 5$; $\Delta \times \otimes = 10$, **Then, the value of** $(\otimes - \oplus)^2$**, is:**
(A)	0
(B)	1
(C)	4
(D)	16

Q.5	**The front door of Mr. X's house faces East. Mr. X leaves the house, walking 50 m straight from the back door that is situated directly opposite to the front door. He then turns to his right, walks for another 50 m and stops. The direction of the point Mr. X is now located at with respect to the starting point is _____**
(A)	South-East
(B)	North-East
(C)	West
(D)	North-West

Q. 6 – Q. 10 Multiple Choice Question (MCQ), carry TWO marks each (for each wrong answer: – 2/3).

Q.6	**Given below are two statements 1 and 2, and two conclusions I and II.** **Statement 1: All entrepreneurs are wealthy.** **Statement 2: All wealthy are risk seekers.** **Conclusion I: All risk seekers are wealthy.** **Conclusion II: Only some entrepreneurs are risk seekers.** **Based on the above statements and conclusions, which one of the following options is CORRECT?**
(A)	Only conclusion I is correct
(B)	Only conclusion II is correct
(C)	Neither conclusion I nor II is correct
(D)	Both conclusions I and II are correct

Q.7	**A box contains 15 blue balls and 45 black balls. If 2 balls are selected randomly, without replacement, the probability of an outcome in which the first selected is a blue ball and the second selected is a black ball, is _____**
(A)	$\frac{3}{16}$
(B)	$\frac{45}{236}$
(C)	$\frac{1}{4}$
(D)	$\frac{3}{4}$

Q.8	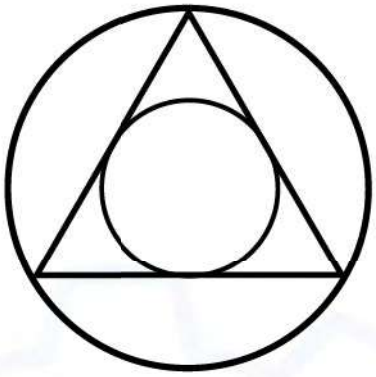 **The ratio of the area of the inscribed circle to the area of the circumscribed circle of an equilateral triangle is____**
(A)	$\frac{1}{8}$
(B)	$\frac{1}{6}$
(C)	$\frac{1}{4}$
(D)	$\frac{1}{2}$

Q.9	**Consider a square sheet of side 1 unit. The sheet is first folded along the main diagonal. This is followed by a fold along its line of symmetry. The resulting folded shape is again folded along its line of symmetry. The area of each face of the final folded shape, in square units, equal to _____**
(A)	$\frac{1}{4}$
(B)	$\frac{1}{8}$
(C)	$\frac{1}{16}$
(D)	$\frac{1}{32}$

Q.10	**The world is going through the worst pandemic in the past hundred years. The air travel industry is facing a crisis, as the resulting quarantine requirement for travelers led to weak demand.** **In relation to the first sentence above, what does the second sentence do?**
(A)	**Restates an idea from the first sentence.**
(B)	**Second sentence entirely contradicts the first sentence.**
(C)	**The two statements are unrelated.**
(D)	**States an effect of the first sentence.**

Mechanical Engineering (ME, Set-2)

Q.1 – Q.19 Multiple Choice Question (MCQ), carry ONE mark each (for each wrong answer: – 1/3).

Q.1	**Consider an $n \times n$ matrix A and a non-zero $n \times 1$ vector p. Their product $Ap = \alpha^2 p$, where $\alpha \in \Re$ and $\alpha \notin \{-1, 0, 1\}$. Based on the given information, the eigen value of A^2 is:**
(A)	α
(B)	α^2
(C)	$\sqrt{\alpha}$
(D)	α^4

Q.2	**If the Laplace transform of a function $f(t)$ is given by $\frac{s+3}{(s+1)(s+2)}$, then $f(0)$ is**
(A)	**0**
(B)	$\frac{1}{2}$
(C)	**1**
(D)	$\frac{3}{2}$

Q.3	**The mean and variance, respectively, of a binomial distribution for n independent trials with the probability of success as p, are**
(A)	$\sqrt{np}$, $np(1-2p)$
(B)	$\sqrt{np}$, $\sqrt{np(1-p)}$
(C)	np , np
(D)	np , $np(1-p)$

Q.4	**The Cast Iron which possesses all the carbon in the combined form as cementite is known as**
(A)	Grey Cast Iron
(B)	Spheroidal Cast Iron
(C)	Malleable Cast Iron
(D)	White Cast Iron

Q.5	**The size distribution of the powder particles used in Powder Metallurgy process can be determined by**
(A)	Laser scattering
(B)	Laser reflection
(C)	Laser absorption
(D)	Laser penetration

Q.6	In a CNC machine tool, the function of an interpolator is to generate
(A)	signal for the lubrication pump during machining
(B)	error signal for tool radius compensation during machining
(C)	NC code from the part drawing during post processing
(D)	reference signal prescribing the shape of the part to be machined

Q.7	The machining process that involves ablation is
(A)	Abrasive Jet Machining
(B)	Chemical Machining
(C)	Electrochemical Machining
(D)	Laser Beam Machining

Q.8	A PERT network has 9 activities on its critical path. The standard deviation of each activity on the critical path is 3. The standard deviation of the critical path is
(A)	3
(B)	9
(C)	27
(D)	81

Q.9	**The allowance provided in between a hole and a shaft is calculated from the difference between**
(A)	lower limit of the shaft and the upper limit of the hole
(B)	upper limit of the shaft and the upper limit of the hole
(C)	upper limit of the shaft and the lower limit of the hole
(D)	lower limit of the shaft and the lower limit of the hole

Q.10	**In forced convective heat transfer, Stanton number (St), Nusselt number (Nu), Reynolds number (Re) and Prandtl number (Pr) are related as**
(A)	$\mathrm{St} = \dfrac{\mathrm{Nu}}{\mathrm{Re\,Pr}}$
(B)	$\mathrm{St} = \dfrac{\mathrm{Nu\,Pr}}{\mathrm{Re}}$
(C)	$\mathrm{St} = \mathrm{Nu\,Pr\,Re}$
(D)	$\mathrm{St} = \dfrac{\mathrm{Nu\,Re}}{\mathrm{Pr}}$

Q.11	**For a two-dimensional, incompressible flow having velocity components u and v in the x and y directions, respectively, the expression** $$\frac{\partial(u^2)}{\partial x}+\frac{\partial(uv)}{\partial y}$$ **can be simplified to**
(A)	$u\frac{\partial u}{\partial x}+u\frac{\partial v}{\partial y}$
(B)	$2u\frac{\partial u}{\partial x}+u\frac{\partial v}{\partial y}$
(C)	$2u\frac{\partial u}{\partial x}+v\frac{\partial u}{\partial y}$
(D)	$u\frac{\partial u}{\partial x}+v\frac{\partial u}{\partial y}$

Q.12	**Which of the following is responsible for eddy viscosity (or turbulent viscosity) in a turbulent boundary layer on a flat plate?**
(A)	Nikuradse stresses
(B)	Reynolds stresses
(C)	Boussinesq stresses
(D)	Prandtl stresses

Q.13	**A two dimensional flow has velocities in x and y directions given by $u = 2xyt$ and $v = -y^2t$, where t denotes time. The equation for streamline passing through $x = 1,\ y = 1$ is**
(A)	$x^2y = 1$
(B)	$xy^2 = 1$
(C)	$x^2y^2 = 1$
(D)	$x/y^2 = 1$

Q.14	**A plane truss $PQRS$ ($PQ = RS$, and $\angle PQR = 90°$) is shown in the figure.** 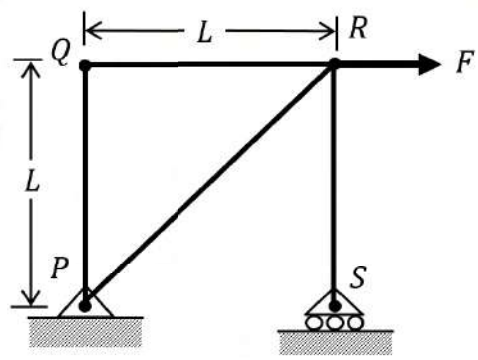 **The forces in the members PR and RS, respectively, are _____**
(A)	$F\sqrt{2}$ (tensile) and F (tensile)
(B)	$F\sqrt{2}$ (tensile) and F (compressive)
(C)	F (compressive) and $F\sqrt{2}$ (compressive)
(D)	F (tensile) and $F\sqrt{2}$ (tensile)

Q.15	**Consider the mechanism shown in the figure. There is rolling contact without slip between the disc and ground.** 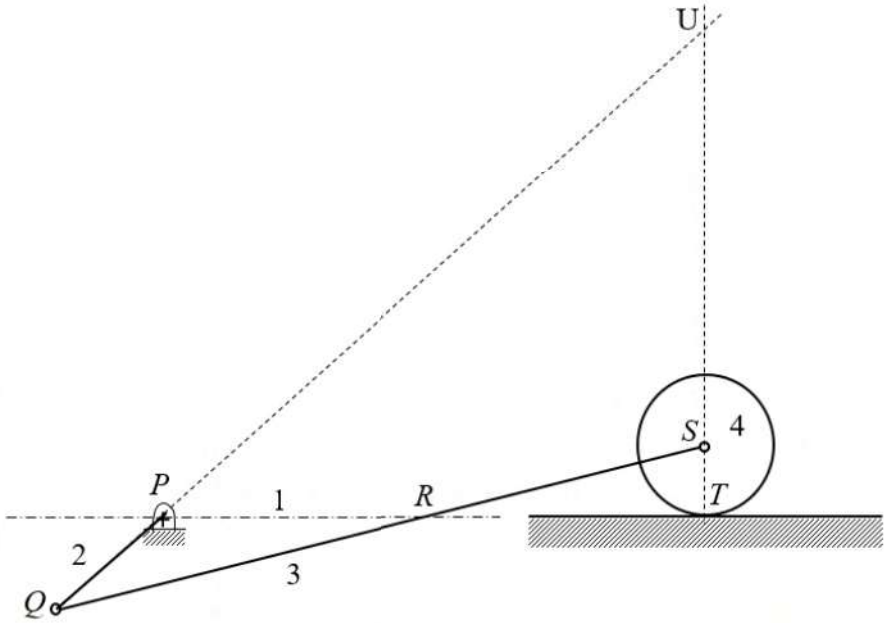 **Select the correct statement about instantaneous centers in the mechanism.**
(A)	Only points P, Q, and S are instantaneous centers of mechanism
(B)	Only points P, Q, S and T are instantaneous centers of mechanism
(C)	Only points P, Q, R, S, and U are instantaneous centers of mechanism
(D)	All points P, Q, R, S, T and U are instantaneous centers of mechanism

Q.16	**The controlling force curves P, Q and R for a spring controlled governor are shown in the figure, where r_1 and r_2 are any two radii of rotation.** 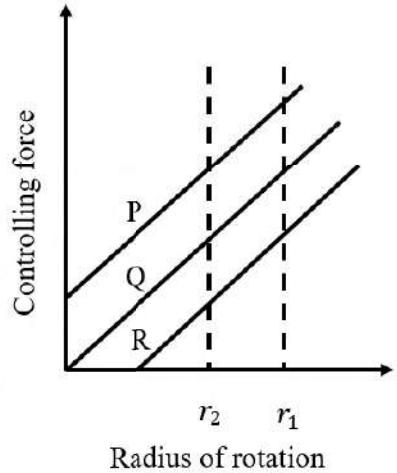 **The characteristics shown by the curves are**
(A)	P – Unstable; Q – Stable; R – Isochronous
(B)	P – Unstable; Q – Isochronous; R – Stable
(C)	P– Stable; Q – Isochronous; R – Unstable
(D)	P – Stable; Q – Unstable; R – Isochronous

Q.17	**The von Mises stress at a point in a body subjected to forces is proportional to the square root of the**
(A)	total strain energy per unit volume
(B)	plastic strain energy per unit volume
(C)	dilatational strain energy per unit volume
(D)	distortional strain energy per unit volume

Q.18	Value of $\int_4^{5.2} \ln x \, dx$ using Simpson's one-third rule with interval size 0.3 is
(A)	1.83
(B)	1.60
(C)	1.51
(D)	1.06

Q.19	Value of $(1+i)^8$, where $i = \sqrt{-1}$, is equal to
(A)	4
(B)	16
(C)	$4i$
(D)	$16i$

Q.20 – Q.25 Numerical Answer Type (NAT), carry ONE mark each (no negative marks).

Q.20	**Consider adiabatic flow of air through a duct. At a given point in the duct, velocity of air is 300 m/s, temperature is 330 K and pressure is 180 kPa. Assume that the air behaves as a perfect gas with constant c_p =1.005 kJ/kg.K. The stagnation temperature at this point is _____ K (*round off to two decimal places*).**

Q.21	**Consider an ideal vapour compression refrigeration cycle working on R-134a refrigerant. The COP of the cycle is 10 and the refrigeration capacity is 150 kJ/kg. The heat rejected by the refrigerant in the condenser is _____ kJ/kg (*round off to the nearest integer*).**

Q.22	**A rigid tank of volume 50 m^3 contains a pure substance as a saturated liquid vapour mixture at 400 kPa. Of the total mass of the mixture, 20% mass is liquid and 80% mass is vapour. Properties at 400 kPa are: T_{sat} = 143.61 °C, v_f = 0.001084 m^3/kg, v_g = 0.46242 m^3/kg. The total mass of liquid vapour mixture in the tank is _____kg (*round off to the nearest integer*).**

Q.23	**An object is moving with a Mach number of 0.6 in an ideal gas environment, which is at a temperature of 350 K. The gas constant is 320 J/kg.K and ratio of specific heats is 1.3. The speed of object is _____m/s (*round off to the nearest integer*).**

Q.24	**A column with one end fixed and one end free has a critical buckling load of 100 N. For the same column, if the free end is replaced with a pinned end then the critical buckling load will be _____N (*round off to the nearest integer*).**

Q.25	**A steel cubic block of side 200 mm is subjected to hydrostatic pressure of 250 N/mm^2. The elastic modulus is 2×10^5 N/mm^2 and Poisson ratio is 0.3 for steel. The side of the block is reduced by _____ mm (*round off to two decimal places*).**

Q. 26 – Q.34 Multiple Choice Question (MCQ), carry TWO mark each (for each wrong answer: – 2/3).

Q.26	**The value of** $\int_0^{\pi/2}\int_0^{\cos\theta} r\sin\theta\, dr\, d\theta$ **is**
(A)	0
(B)	$\frac{1}{6}$
(C)	$\frac{4}{3}$
(D)	π

Q.27	**Let the superscript** T **represent the transpose operation. Consider the function** $f(x) = \frac{1}{2}x^T Q x - r^T x$**, where** x **and** r **are** $n \times 1$ **vectors and** Q **is a symmetric** $n \times n$ **matrix. The stationary point of** $f(x)$ **is**
(A)	$Q^T r$
(B)	$Q^{-1} r$
(C)	$\frac{r}{r^T r}$
(D)	r

Q.28	**Consider the following differential equation** $$(1+y)\frac{dy}{dx} = y.$$ **The solution of the equation that satisfies the condition** $y(1) = 1$ **is**
(A)	$2ye^y = e^x + e$
(B)	$y^2 e^y = e^x$
(C)	$ye^y = e^x$
(D)	$(1+y)e^y = 2e^x$

Q.29	A factory produces $m\ (i = 1, 2, \ldots, m)$ products, each of which requires processing on $n\ (j = 1, 2, \ldots, n)$ workstations. Let a_{ij} be the amount of processing time that one unit of the ith product requires on the jth workstation. Let the revenue from selling one unit of the i^{th}product be r_i and h_i be the holding cost per unit per time period for the ith product. The planning horizon consists of $T\ (t = 1, 2, \ldots, T)$ time periods. The minimum demand that must be satisfied in time period t is d_{it}, and the capacity of the jth workstation in time period t is c_{jt}. Consider the aggregate planning formulation below, with decision variables S_{it} (amount of product i sold in time period t), X_{it} (amount of product i manufactured in time period t) and I_{it} (amount of product i held in inventory at the end of time period t. $$\max \sum_{t=1}^{T}\sum_{i=1}^{m}(r_i S_{it} - h_i I_{it})$$ subject to $S_{it} \geq d_{it} \quad \forall \quad i, t$ $< capacity\ constraint >$ $< inventory\ balance\ constraint >$ $X_{it}, S_{it}, I_{it} \geq 0; I_{i0} = 0$ The capacity constraints and inventory balance constraints for this formulation are
(A)	$\sum_{i}^{m} a_{ij}X_{it} \leq c_{jt} \ \forall \ j, t$ and $I_{it} = I_{i,t-1} + X_{it} - S_{it} \quad \forall \ i, t$
(B)	$\sum_{i}^{m} a_{ij}X_{it} \leq c_{jt} \ \forall \ i, t$ and $I_{it} = I_{i,t-1} + X_{it} - d_{it} \quad \forall \ i, t$
(C)	$\sum_{i}^{m} a_{ij}X_{it} \leq d_{it} \ \forall \ i, t$ and $I_{it} = I_{i,t-1} + X_{it} - S_{it} \quad \forall \ i, t$
(D)	$\sum_{i}^{m} a_{ij}X_{it} \leq d_{it} \ \forall \ i, t$ and $I_{it} = I_{i,t-1} + S_{it} - X_{it} \quad \forall \ i, t$

Q.30	**Ambient pressure, temperature, and relative humidity at a location are 101 kPa, 300 K, and 60%, respectively. The saturation pressure of water at 300 K is 3.6 kPa. The specific humidity of ambient air is _____ g/kg of dry air.**
(A)	21.4
(B)	35.1
(C)	21.9
(D)	13.6

Q.31	**A plane frame *PQR* (fixed at *P* and free at *R*) is shown in the figure. Both members (*PQ* and *QR*) have length, *L*, and flexural rigidity, *EI*. Neglecting the effect of axial stress and transverse shear, the horizontal deflection at free end, *R*, is** 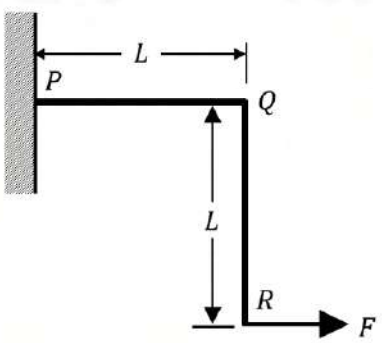
(A)	$\frac{5FL^3}{3EI}$
(B)	$\frac{4FL^3}{3EI}$
(C)	$\frac{2FL^3}{3EI}$
(D)	$\frac{FL^3}{3EI}$

Q.32	**A power transmission mechanism consists of a belt drive and a gear train as shown in the figure.** 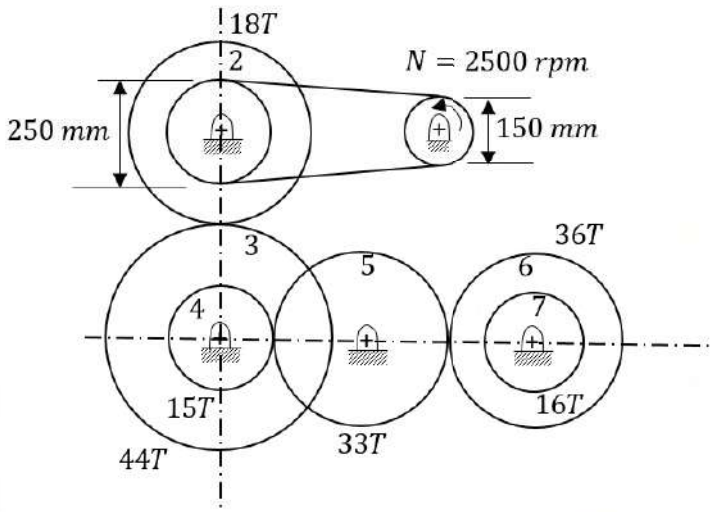 **Diameters of pulleys of belt drive and number of teeth (*T*) on the gears 2 to 7 are indicated in the figure. The speed and direction of rotation of gear 7, respectively, are**
(A)	255.68 rpm; clockwise
(B)	255.68 rpm; anticlockwise
(C)	575.28 rpm; clockwise
(D)	575.28 rpm; anticlockwise

Q.33	**A machine of mass 100 kg is subjected to an external harmonic force with a frequency of 40 rad/s. The designer decides to mount the machine on an isolator to reduce the force transmitted to the foundation. The isolator can be considered as a combination of stiffness (K) and damper (damping factor, ξ) in parallel. The designer has the following four isolators:** **1) K = 640 kN/m, ξ = 0.70** **2) K = 640 kN/m, ξ = 0.07** **3) K = 22.5 kN/m, ξ = 0.70** **4) K = 22.5 kN/m, ξ = 0.07** **Arrange the isolators in the ascending order of the force transmitted to the foundation.**
(A)	1-3-4-2
(B)	1-3-2-4
(C)	4-3-1-2
(D)	3-1-2-4

Q.34	**Consider the system shown in the figure. A rope goes over a pulley. A mass, m, is hanging from the rope. A spring of stiffness, k, is attached at one end of the rope. Assume rope is inextensible, massless and there is no slip between pulley and rope.** 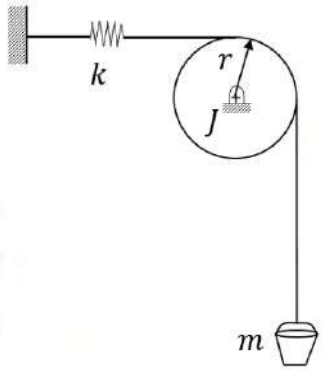 **The pulley radius is r and its mass moment of inertia is J. Assume that the mass is vibrating harmonically about its static equilibrium position. The natural frequency of the system is**
(A)	$\sqrt{\frac{kr^2}{J - mr^2}}$
(B)	$\sqrt{\frac{kr^2}{J + mr^2}}$
(C)	$\sqrt{k/m}$
(D)	$\sqrt{\frac{kr^2}{J}}$

Q.35 – Q.55 Numerical Answer Type (NAT), carry TWO mark each (no negative marks).

Q.35	**Find the positive real root of $x^3 - x - 3 = 0$ using Newton-Raphson method. If the starting guess (x_0) is 2, the numerical value of the root after two iterations (x_2) is _____ (*round off to two decimal places*).**

Q.36	**Daily production capacity of a bearing manufacturing company is 30000 bearings. The daily demand of the bearing is 15000. The holding cost per year of keeping a bearing in the inventory is ₹ 20. The setup cost for the production of a batch is ₹ 1800. Assuming 300 working days in a year, the economic batch quantity in number of bearings is _____ (*in integer*).**

Q.37	**A cast product of a particular material has dimensions 75 mm × 125 mm × 20 mm. The total solidification time for the cast product is found to be 2.0 minutes as calculated using Chvorinov's rule having the index, n = 2. If under the identical casting conditions, the cast product shape is changed to a cylinder having diameter = 50 mm and height = 50 mm, the total solidification time will be _____ minutes (*round off to two decimal places*).**

Q.38	**A spot welding operation performed on two pieces of steel yielded a nugget with a diameter of 5 mm and a thickness of 1 mm. The welding time was 0.1 s. The melting energy for the steel is 20 J/mm^3. Assuming the heat conversion efficiency as 10%, the power required for performing the spot welding operation is _____ kW (*round off to two decimal places*).**

Q.39	**A surface grinding operation has been performed on a Cast Iron plate having dimensions 300 mm (*length*) × 10 mm (*width*) × 50 mm (*height*). The grinding was performed using an alumina wheel having a wheel diameter of 150 mm and wheel width of 12 mm. The grinding velocity used is 40 m/s, table speed is 5 m/min, depth of cut per pass is 50 μm and the number of grinding passes is 20. The average tangential and average normal force for each pass is found to be 40 N and 60 N respectively. The value of the specific grinding energy under the aforesaid grinding conditions is _____ J/mm^3 (*round off to one decimal place*).**

Q.40	**In a pure orthogonal turning by a zero rake angle single point carbide cutting tool, the shear force has been computed to be 400 N. The cutting velocity, V_c = 100 m/min, depth of cut, t = 2.0 mm, feed, s_0 = 0.1 mm/revolution and chip velocity, V_f = 20 m/min, the shear strength, τ_s of the material will be _____ MPa (*round off to two decimal places*).**

Q.41	**The thickness, width and length of a metal slab are 50 mm, 250 mm and 3600 mm, respectively. A rolling operation on this slab reduces the thickness by 10% and increases the width by 3%. The length of the rolled slab is _____ mm (*round off to one decimal place*).**

Q.42	**A 76.2 mm gauge block is used under one end of a 254 mm sine bar with roll diameter of 25.4 mm. The height of gauge blocks required at the other end of the sine bar to measure an angle of 30° is _____ mm (*round off to two decimal places*).**

Q.43 **The demand and forecast of an item for five months are given in the table.**

Month	Demand	Forecast
April	225	200
May	220	240
June	285	300
July	290	270
August	250	230

The Mean Absolute Percent Error (MAPE) in the forecast is _____ %
(*round off to two decimal places*)

Q.44 **A shell and tube heat exchanger is used as a steam condenser. Coolant water enters the tube at 300 K at a rate of 100 kg/s. The overall heat transfer coefficient is 1500 W/m^2.K, and total heat transfer area is 400 m^2. Steam condenses at a saturation temperature of 350 K. Assume that the specific heat of coolant water is 4000 J/kg.K. The temperature of the coolant water coming out of the condenser is _____ K (*round off to the nearest integer*).**

Q.45 **Ambient air flows over a heated slab having flat, top surface at $y = 0$. The local temperature (in Kelvin) profile within the thermal boundary layer is given by $T(y) = 300 + 200\exp(-5y)$, where y is the distance measured from the slab surface in meter. If the thermal conductivity of air is 1.0 W/m.K and that of the slab is 100 W/m.K, then the magnitude of temperature gradient $|dT/dy|$ within the slab at $y = 0$ is _____ K/m (*round off to the nearest integer*).**

Q.46 **Water flows out from a large tank of cross-sectional area $A_t = 1$ m^2 through a small rounded orifice of cross-sectional area $A_o = 1$ cm^2, located at $y = 0$. Initially the water level, measured from $y = 0$, is $H = 1$ m. The acceleration due to gravity is 9.8 m/s^2.**

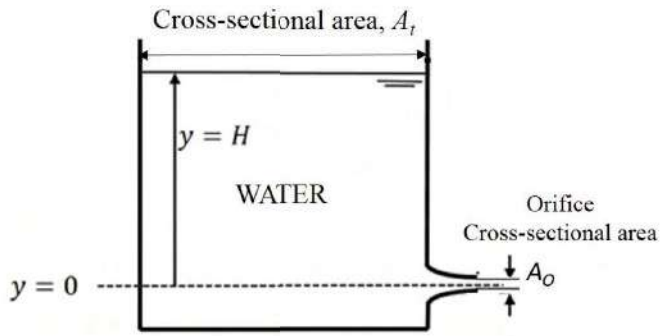

Neglecting any losses, the time taken by water in the tank to reach a level of $y = H/4$ is _____ seconds (*round off to one decimal place*).

Q.47 **Consider the open feed water heater (FWH) shown in the figure given below:**

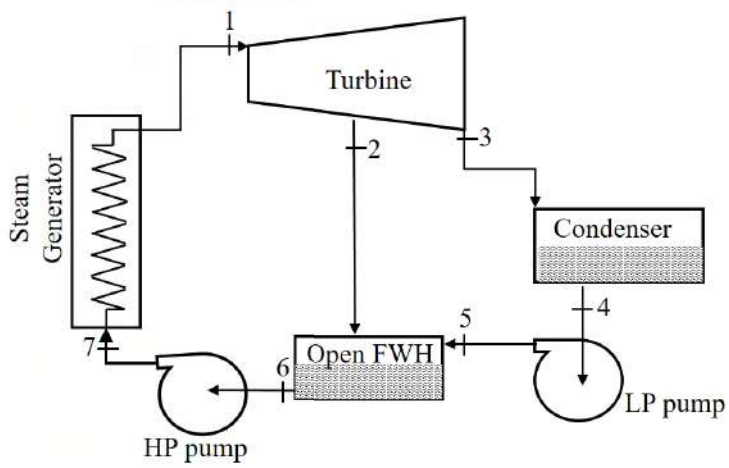

Specific enthalpy of steam at location 2 is 2624 kJ/kg, specific enthalpy of water at location 5 is 226.7 kJ/kg and specific enthalpy of saturated water at location 6 is 708.6 kJ/kg. If the mass flow rate of water entering the open feed water heater (at location 5) is 100 kg/s then the mass flow rate of steam at location 2 will be _____ kg/s (*round off to one decimal place*).

Q.48 **A high velocity water jet of cross section area = 0.01 m^2 and velocity = 35 m/s enters a pipe filled with stagnant water. The diameter of the pipe is 0.32 m. This high velocity water jet entrains additional water from the pipe and the total water leaves the pipe with a velocity 6m/s as shown in the figure.**

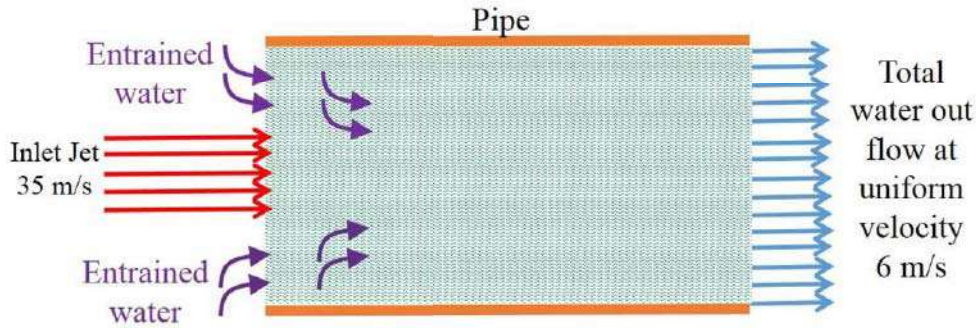

The flow rate of entrained water is _____ litres/s (*round off to two decimal places*).

Q.49 **A vertical shaft Francis turbine rotates at 300 rpm. The available head at the inlet to the turbine is 200 m. The tip speed of the rotor is 40 m/s. Water leaves the runner of the turbine without whirl. Velocity at the exit of the draft tube is 3.5 m/s. The head losses in different components of the turbine are: (i) stator and guide vanes: 5.0 m, (ii) rotor: 10 m, and (iii) draft tube: 2 m. Flow rate through the turbine is 20 m^3/s. Take g = 9.8 m/s^2. The hydraulic efficiency of the turbine is _____ % (*round off to one decimal place*).**

Q.50 **An adiabatic vortex tube, shown in the figure given below is supplied with 5 kg/s of air (inlet 1) at 500 kPa and 300 K. Two separate streams of air are leaving the device from outlets 2 and 3. Hot air leaves the device at a rate of 3 kg/s from outlet 2 at 100 kPa and 340 K, and 2 kg/s of cold air stream is leaving the device from outlet 3 at 100 kPa and 240 K.**

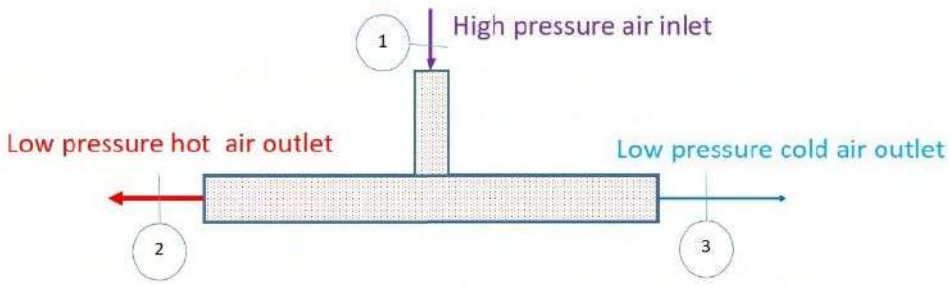

Assume constant specific heat of air is 1005 J/kg.K and gas constant is 287 J/kg.K. There is no work transfer across the boundary of this device. The rate of entropy generation is _____kW/K (*round off to one decimal place*).

Q.51 **A block of negligible mass rests on a surface that is inclined at 30° to the horizontal plane as shown in the figure. When a vertical force of 900 N and a horizontal force of 750 N are applied, the block is just about to slide.**

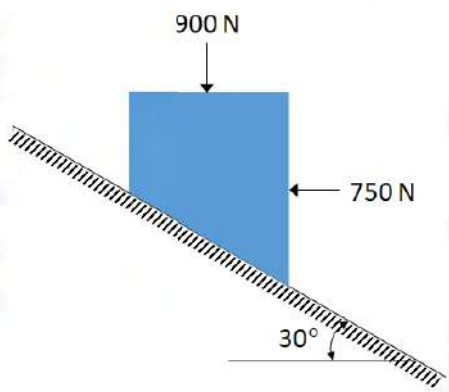

The coefficient of static friction between the block and surface is _____ (*round off to two decimal places*).

Q.52 **The wheels and axle system lying on a rough surface is shown in the figure.**

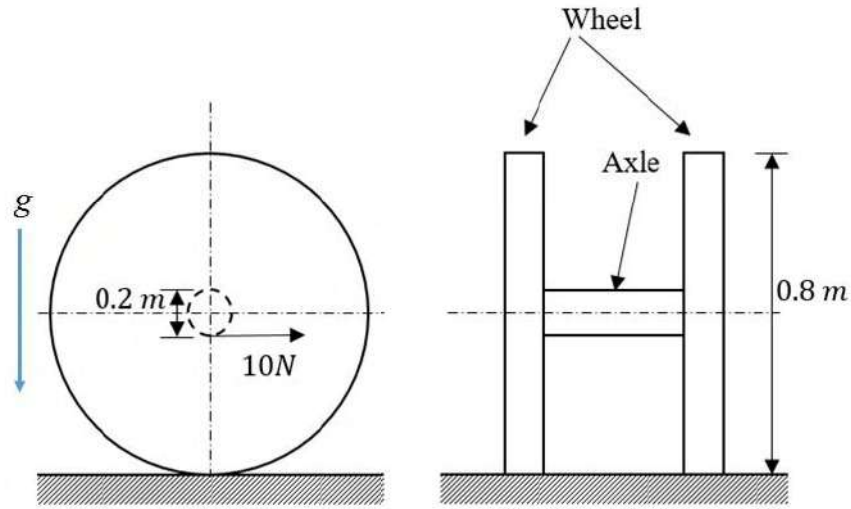

Each wheel has diameter 0.8 m and mass 1 kg. Assume that the mass of the wheel is concentrated at rim and neglect the mass of the spokes. The diameter of axle is 0.2 m and its mass is 1.5 kg. Neglect the moment of inertia of the axle and assume $g = 9.8$ m/s^2. An effort of 10 N is applied on the axle in the horizontal direction shown at mid span of the axle. Assume that the wheels move on a horizontal surface without slip. The acceleration of the wheel axle system in horizontal direction is _____ m/s^2 (*round off to one decimal place*).

Q.53 **A cantilever beam with a uniform flexural rigidity ($EI = 200 \times 10^6$ N.m^2) is loaded with a concentrated force at its free end. The area of the bending moment diagram corresponding to the full length of the beam is 10000 N.m^2. The magnitude of the slope of the beam at its free end is _____ micro radian (*round off to the nearest integer*).**

Q.54 **The torque provided by an engine is given by $T(\theta) = 12000 + 2500 \sin(2\theta)$ N.m, where θ is the angle turned by the crank from inner dead center. The mean speed of the engine is 200 rpm and it drives a machine that provides a constant resisting torque. If variation of the speed from the mean speed is not to exceed ±0.5%, the minimum mass moment of inertia of the flywheel should be _____ kg.m^2 (*round off to the nearest integer*).**

Q.55	**The figure shows the relationship between fatigue strength (S) and fatigue life (N) of a material. The fatigue strength of the material for a life of 1000 cycles is 450 MPa, while its fatigue strength for a life of 10^6 cycles is 150 MPa.** 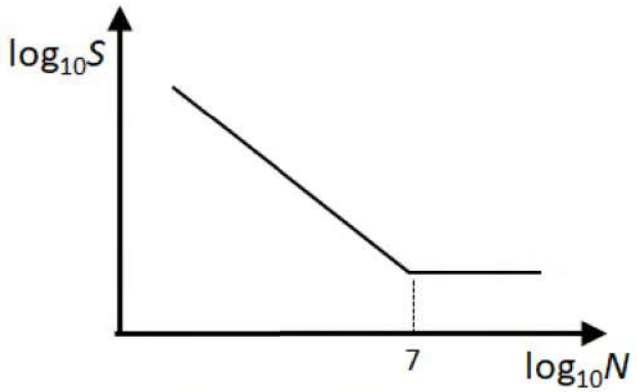 **The life of a cylindrical shaft made of this material subjected to an alternating stress of 200 MPa will then be _____ cycles (*round off to the nearest integer*).**

END OF THE QUESTION PAPER

Graduate Aptitude Test in Engineering (GATE 2021)

Subject/Paper: Mechanical Engineering (ME - 2)

Q. No.	Session	Question Type MCQ/MSQ/NAT	Section Name	Answer Key/Range	Marks	Negative Marks
1	8	MCQ	GA	B	1	1/3
2	8	MCQ	GA	A	1	1/3
3	8	MCQ	GA	A	1	1/3
4	8	MCQ	GA	B	1	1/3
5	8	MCQ	GA	D	1	1/3
6	8	MCQ	GA	C	2	2/3
7	8	MCQ	GA	B	2	2/3
8	8	MCQ	GA	C	2	2/3
9	8	MCQ	GA	B	2	2/3
10	8	MCQ	GA	D	2	2/3
1	8	MCQ	ME	D	1	1/3
2	8	MCQ	ME	C	1	1/3
3	8	MCQ	ME	D	1	1/3
4	8	MCQ	ME	D	1	1/3
5	8	MCQ	ME	A	1	1/3
6	8	MCQ	ME	D	1	1/3
7	8	MCQ	ME	D	1	1/3
8	8	MCQ	ME	B	1	1/3
9	8	MCQ	ME	C	1	1/3
10	8	MCQ	ME	A	1	1/3
11	8	MCQ	ME	D	1	1/3

GATE 2021 Answer Key for Mechanical Engineering (ME - 2)

Q. No.	Session	Question Type MCQ/MSQ/NAT	Section Name	Answer Key/Range	Marks	Negative Marks
12	8	MCQ	ME	B	1	1/3
13	8	MCQ	ME	B	1	1/3
14	8	MCQ	ME	B	1	1/3
15	8	MCQ	ME	D	1	1/3
16	8	MCQ	ME	B	1	1/3
17	8	MCQ	ME	D	1	1/3
18	8	MCQ	ME	A	1	1/3
19	8	MCQ	ME	B	1	1/3
20	8	NAT	ME	373.00 to 377.00	1	0
21	8	NAT	ME	165 to 165	1	0
22	8	NAT	ME	134 to 136	1	0
23	8	NAT	ME	228 to 230	1	0
24	8	NAT	ME	800 to 840	1	0
25	8	NAT	ME	0.08 to 0.12	1	0
26	8	MCQ	ME	B	2	2/3
27	8	MCQ	ME	B	2	2/3
28	8	MCQ	ME	C	2	2/3
29	8	MCQ	ME	A	2	2/3
30	8	MCQ	ME	D	2	2/3
31	8	MCQ	ME	B	2	2/3
32	8	MCQ	ME	A	2	2/3
33	8	MCQ	ME	C	2	2/3
34	8	MCQ	ME	B	2	2/3

GATE 2021 Answer Key for Mechanical Engineering (ME - 2)

Q. No.	Session	Question Type MCQ/MSQ/NAT	Section Name	Answer Key/Range	Marks	Negative Marks
35	8	NAT	ME	1.66 to 1.68	2	0
36	8	NAT	ME	40200 to 40300	2	0
37	8	NAT	ME	2.60 to 3.00	2	0
38	8	NAT	ME	39.00 to 40.00	2	0
39	8	NAT	ME	38.0 to 39.0	2	0
40	8	NAT	ME	388.00 to 400.00	2	0
41	8	NAT	ME	3880.0 to 3886.0	2	0
42	8	NAT	ME	200.00 to 206.00	2	0
43	8	NAT	ME	6.00 to 10.00	2	0
44	8	NAT	ME	337 to 341	2	0
45	8	NAT	ME	10 to 10	2	0
46	8	NAT	ME	2257.0 to 2259.0	2	0
47	8	NAT	ME	25.0 to 25.4	2	0
48	8	NAT	ME	130.00 to 134.00	2	0
49	8	NAT	ME	90.0 to 92.0	2	0
50	8	NAT	ME	2.1 to 2.3	2	0
51	8	NAT	ME	0.16 to 0.19	2	0
52	8	NAT	ME	1.3 to 1.4	2	0
53	8	NAT	ME	48 to 52	2	0
54	8	NAT	ME	560 to 580	2	0
55	8	NAT	ME	152000 to 165000	2	0