Graduate Aptitude Test in Engineering

Notations :

1.Options shown in green color and with ✔ icon are correct.

2.Options shown in red color and with ✖ icon are incorrect.

Question Paper Name: MN: MINING ENGINEERING 1st Feb shift2
Number of Questions: 65
Total Marks: 100.0

Wrong answer for MCQ will result in negative marks, (-1/3) for 1 mark Questions and (-2/3) for 2 marks Questions.

General Aptitude

Number of Questions: 10
Section Marks: 15.0

Q.1 to Q.5 carry 1 mark each & Q.6 to Q.10 carry 2 marks each.

Question Number : 1 Question Type : MCQ

Choose the appropriate word/phrase, out of the four options given below, to complete the following sentence:

Apparent lifelessness _____ dormant life.

(A) harbours (B) leads to (C) supports (D) affects

Options :

1. ✔ A
2. ✖ B
3. ✖ C
4. ✖ D

Question Number : 2 Question Type : MCQ

Fill in the blank with the correct idiom/phrase.

That boy from the town was a _____ in the sleepy village.

(A) dog out of herd (B) sheep from the heap
(C) fish out of water (D) bird from the flock

Options :

1. ✖ A
2. ✖ B
3. ✔ C
4. ✖ D

Question Number : 3 Question Type : MCQ

Choose the statement where underlined word is used correctly.

(A) When the teacher eludes to different authors, he is being elusive.
(B) When the thief keeps eluding the police, he is being elusive.
(C) Matters that are difficult to understand, identify or remember are allusive.
(D) Mirages can be allusive, but a better way to express them is illusory.

Options :

1. ✖ A
2. ✔ B
3. ✖ C
4. ✖ D

Question Number : 4 Question Type : MCQ

Tanya is older than Eric.
Cliff is older than Tanya.
Eric is older than Cliff.

If the first two statements are true, then the third statement is:

(A) True
(B) False
(C) Uncertain
(D) Data insufficient

Options :

1. ✖ A
2. ✔ B
3. ✖ C
4. ✖ D

Question Number : 5 Question Type : MCQ

Five teams have to compete in a league, with every team playing every other team exactly once, before going to the next round. How many matches will have to be held to complete the league round of matches?

(A) 20 (B) 10 (C) 8 (D) 5

Options :

1. ✖ A
2. ✔ B
3. ✖ C
4. ✖ D

Question Number : 6 Question Type : MCQ

Select the appropriate option in place of underlined part of the sentence.

Increased productivity necessary reflects greater efforts made by the employees.

(A) Increase in productivity necessary
(B) Increase productivity is necessary
(C) Increase in productivity necessarily
(D) No improvement required

Options :

1. ✖ A
2. ✖ B
3. ✔ C
4. ✖ D

Question Number : 7 Question Type : MCQ

Given below are two statements followed by two conclusions. Assuming these statements to be true, decide which one logically follows.

Statements:

I. No manager is a leader.
II. All leaders are executives.

Conclusions:

I. No manager is an executive.
II. No executive is a manager.

(A) Only conclusion I follows.
(B) Only conclusion II follows.
(C) Neither conclusion I nor II follows.
(D) Both conclusions I and II follow.

Options :

1. ✖ A
2. ✖ B
3. ✔ C
4. ✖ D

Question Number : 8 Question Type : NAT

In the given figure angle Q is a right angle, PS:QS = 3:1, RT:QT = 5:2 and PU:UR = 1:1. If area of triangle QTS is 20 cm^2, then the area of triangle PQR in cm^2 is _____.

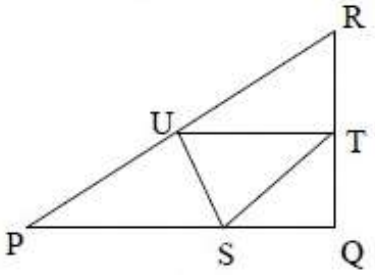

Correct Answer :

280

Question Number : 9 Question Type : MCQ

Right triangle PQR is to be constructed in the xy - plane so that the right angle is at P and line PR is parallel to the x-axis. The x and y coordinates of P, Q, and R are to be integers that satisfy the inequalities: $-4 \le x \le 5$ and $6 \le y \le 16$. How many different triangles could be constructed with these properties?

(A) 110 (B) 1,100 (C) 9,900 (D) 10,000

Options :

1. ✖ A
2. ✖ B
3. ✔ C
4. ✖ D

Question Number : 10 Question Type : MCQ

A coin is tossed thrice. Let X be the event that head occurs in each of the first two tosses. Let Y be the event that a tail occurs on the third toss. Let Z be the event that two tails occur in three tosses. Based on the above information, which one of the following statements is TRUE?

(A) X and Y are not independent
(B) Y and Z are dependent
(C) Y and Z are independent
(D) X and Z are independent

Options :

1. ✖ A
2. ✔ B
3. ✖ C
4. ✖ D

Mining Engineering

Number of Questions:	55
Section Marks:	85.0

Q.11 to Q.35 carry 1 mark each & Q.36 to Q.65 carry 2 marks each.

Question Number : 11 Question Type : MCQ

Out of the support categories given for an underground coal mine, identify the 'active support'.

(A) wire mesh
(B) shotcrete
(C) fully grouted roof bolt
(D) hydraulic prop

Options :

1. ✖ A
2. ✖ B
3. ✖ C
4. ✔ D

Question Number : 12 Question Type : MCQ

Massive sandstone in immediate roof delays the local fall in goaf of a coal mine. Under this condition, crushing of the pillars at outbye side is called

(A) coal bump
(B) overriding of pillars
(C) stiffening of pillars
(D) spalling of pillars

Options :

1. ✖ A
2. ✔ B
3. ✖ C
4. ✖ D

Question Number : 13 Question Type : NAT

A back sight on a bench mark of RL 100.00 m on the floor of a tunnel is 3.25 m. The inverse staff reading on a roof station of the tunnel is 1.25 m. The RL of the roof station in m is _____

Correct Answer:

104 to 105

Question Number : 14 Question Type : MCQ

The angle in degrees at which a ridge line intersects contours is

(A) 0
(B) 30
(C) 45
(D) 90

Options :

1. ✖ A
2. ✖ B
3. ✖ C
4. ✔ D

Question Number : 15 Question Type : MCQ

In a drum hoisting system through a vertical shaft, overwinding is prevented by

(A) Lilly controller
(B) detaching hook
(C) caliper brake
(D) safety catch

Options :

1. ✖ A
2. ✔ B
3. ✖ C
4. ✖ D

Question Number : 16 Question Type : MCQ

The temperature of a parcel of air decreases from 30.2° C to 28.9° C as it rises from an altitude of 20 m to 120 m. The lapse rate for the atmosphere is

(A) subadiabatic
(B) adiabatic
(C) superadiabatic
(D) transadiabatic

Options :

1. ✖ A
2. ✖ B
3. ✔ C
4. ✖ D

Question Number : 17 Question Type : MCQ

The excess pore pressure in backfill material in a cut-and-fill stope leads to

(A) reduction in strength of the wall rock
(B) enhancement of bearing strength of fill
(C) loss of shear resistance of fill
(D) prevention of progressive failure of crown pillar

Options :

1. ✖ A
2. ✖ B
3. ✔ C
4. ✖ D

Question Number : 18 Question Type : MCQ

The primary purpose of cut holes for blasting in an underground drivage is to

(A) provide additional free face
(B) have smooth surface after blasting
(C) prevent over-breakage
(D) reduce noise

Options :

1. ✔ A
2. ✖ B
3. ✖ C
4. ✖ D

Question Number : 19 Question Type : MCQ

In a triangle ABC, the bearings of the sides AB, BC, and CA are 60^0, 130^0, and 270^0 respectively. The interior angles A, B, and C in degrees respectively are

(A) 110, 40, 30
(B) 40, 110, 30
(C) 30, 40, 110
(D) 30,110, 40

Options :

1. ✖ A
2. ✖ B
3. ✖ C
4. ✔ D

Question Number : 20 Question Type : MCQ

In a binomial distribution, the probability of success $p \to 0$ and number of trials $n \to \infty$ such that $\lambda = np$ approaches to a finite value. The variance of the distribution is

(A) $np\lambda$ (B) $n\lambda$ (C) $p\lambda$ (D) λ

Options :

1. ✖ A
2. ✖ B
3. ✖ C
4. ✔ D

Question Number : 21 Question Type : NAT

For a function $f(x)$, it is given that $f(0) = 2$ and $f'(0) = 4$. Ignoring all other higher order derivative terms, the value of $f(0.5)$ is _____

Correct Answer :

4

Question Number : 22 Question Type : MCQ

The two sides of a parallelogram are given by the vectors $\mathbf{A} = 2\hat{i} - 3\hat{j}$ and $\mathbf{B} = 3\hat{i} + 2\hat{j}$. The area of the parallelogram is

(A) 13 (B) 12 (C) 10 (D) 5

Options :

1. ✔ A
2. ✖ B
3. ✖ C
4. ✖ D

Question Number : 23 Question Type : MCQ

In a BOD test, 5 ml of wastewater is diluted with pure water to fill a 300 ml BOD bottle. The initial and final dissolved oxygen contents of the mix are 9.0 mg/l and 7.0 mg/l respectively. The BOD of the wastewater, in mg/l, is

(A) 2 (B) 10 (C) 120 (D) 600

Options :

1. ✖ A
2. ✖ B
3. ✔ C
4. ✖ D

Question Number : 24 Question Type : NAT

A force of 50 N is applied to a wrench as shown in the figure. The magnitude of the moment in N-mm of this force about the point P is _____

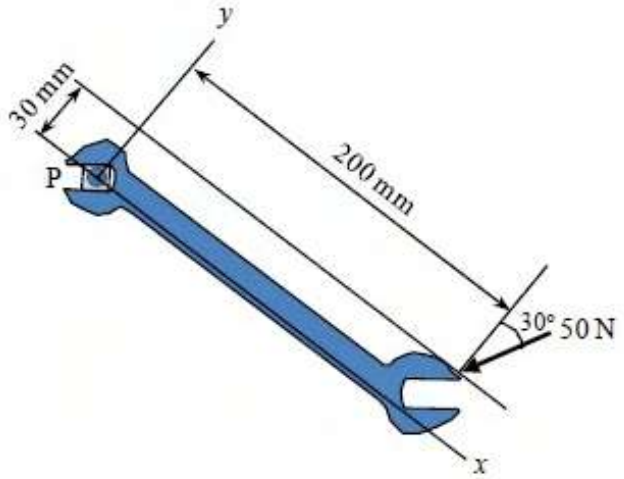

Correct Answer:
7900 to 7920

Question Number : 25 Question Type : MCQ

Dilatancy of rock is associated with

(A) increase in surface area after fragmentation
(B) decrease in volume due to compression of rock
(C) increase in shear strain due to cracking of rock
(D) increase in volume due to cracking of rock

Options :
1. ✖ A
2. ✖ B
3. ✖ C
4. ✔ D

Question Number : 26 Question Type : NAT

A bord and pillar panel having square pillars is designed for 30% extraction during development. If the gallery width is 5 m, the side of the pillar in m is _____

Correct Answer:
25 to 26

Question Number : 27 Question Type : MCQ

Low shock and high gas pressure explosive is generally used for blasting of

(A) hard and brittle rock mass
(B) soft and jointed rock mass
(C) hard and massive intact rock mass
(D) soft and massive intact rock mass

Options :

1. ✖ A
2. ✔ B
3. ✖ C
4. ✖ D

Question Number : 28 Question Type : MCQ

The covariance of copper grade for a certain lag distance in an ore body is 6.0 $(\%)^2$. If the sill is 10 $(\%)^2$, the semivariogram for the same lag distance in $(\%)^2$ is

(A) 4.0 (B) 16.0 (C) 2.0 (D) 64.0

Options :

1. ✔ A
2. ✖ B
3. ✖ C
4. ✖ D

Question Number : 29 Question Type : MCQ

The matrix $A = \begin{bmatrix} -4/6 & 2/6 & 4/6 \\ 4/6 & 4/6 & 2/6 \\ 2/6 & -4/6 & 4/6 \end{bmatrix}$ is

(A) orthogonal (B) diagonal (C) skew-symmetric (D) symmetric

Options :

1. ✔ A
2. ✖ B
3. ✖ C
4. ✖ D

Question Number : 30 Question Type : NAT

A gas mixture contains CH_4, C_2H_6 and H_2 with respective concentrations of 75%, 15% and 10% by volume. The lower explosibility limit of CH_4, C_2H_6 and H_2 are 5.0%, 3.3% and 4.2% respectively. The lower explosibility limit of the gas mixture, in percentage, is _____

Correct Answer:

4.2 to 5.0

Question Number : 31 Question Type : NAT

Intake air containing 0.2% methane enters a section of an underground mine where emission rate of methane is 0.05 m^3/s. Assuming that the threshold limit value of methane is 1.25%, the minimum quantity of fresh air required in m^3/s is _____

Correct Answer :
4.6 to 4.9

Question Number : 32 Question Type : MCQ

In a fully mechanised bord and pillar mining system, winning of coal and its transportation from the face is commonly carried out with the combination of

(A) continuous miner, shuttle car, feeder breaker and belt conveyor
(B) continuous miner, LHD, feeder breaker and chain conveyor
(C) continuous miner, SDL, feeder breaker and belt conveyor
(D) continuous miner, shuttle car, feeder breaker and chain conveyor

Options :
1. ✔ A
2. ✖ B
3. ✖ C
4. ✖ D

Question Number : 33 Question Type : NAT

An underground coal mine employing 1200 persons experiences 2 fatal injuries, 6 serious injuries and 8 reportable injuries during the year 2013. The total injury rate per 1000 persons employed for the year is _____

Correct Answer :
13.0 to 13.6

Question Number : 34 Question Type : MCQ

In self-contained chemical-oxygen self-rescuer, oxygen is produced by

(A) Hopcalite
(B) potassium peroxide
(C) sodium hydroxide
(D) Protosorb

Options :
1. ✖ A
2. ✔ B
3. ✖ C
4. ✖ D

Question Number : 35 Question Type : NAT

The failure data of an equipment follows an exponential distribution. If the mean time between failures is 3000 hours, the reliability of the equipment for 750 hours is _____

Correct Answer:
0.75 to 0.81

Question Number : 36 Question Type : MCQ

In a 4.2 m wide and 3.0 m high gallery in a coal seam, twelve shot holes are blasted per round. The holes are charged with 2 explosive cartridges of 435 g each. If the powder factor of the blast is 2.2 tonne/kg and specific gravity of coal is 1.4, the pull per round of blast in m is

(A) 1.45 (B) 1.70 (C) 1.30 (D) 4.06

Options :

1. ✖ A
2. ✖ B
3. ✔ C
4. ✖ D

Question Number : 37 Question Type : NAT

The stadia readings with horizontal sight on a vertical staff held at 50 m from a tacheometer are 1.285 m and 1.780 m. The focal length of the object glass is 25 cm, and the distance between the object glass and the vertical axis of the tacheometer is 15 cm. The stadia interval in mm is _____

Correct Answer:

2.48 to 2.52

Question Number : 38 Question Type : MCQ

In a shortwall panel, coal is extracted from the face by a continuous miner having rate of production 30 tonne/h. Coal having specific gravity of 1.4 is transported by shuttle cars of capacity 0.9 m^3 each to a feeder breaker located at 60 m from the face. If the average speed of the LHD is 0.5 m/s, and total loading and unloading time of LHD is 40 s, the number of LHDs required to match the production of the continuous miner is

(A) 1 (B) 2 (C) 3 (D) 4

Options :

1. ✖ A
2. ✔ B
3. ✖ C
4. ✖ D

Question Number : 39 Question Type : NAT

Vertical photographs of an area lying 500 m above the mean sea level are to be taken at a scale of 1:20000 from an aircraft. If the camera has a focal length of 210 mm, the flying height of the aircraft above the mean sea level in m is _____

Correct Answer:

4700

Question Number : 40 Question Type : MCQ

Match the following locations with support types in coal mines.

Location	Support type
P. Roadway junctions	1. Powered support
Q. Between adjacent panels	2. Chock and bolt
R. Longwall face	3. Back fill
S. Goaf	4. Barrier pillar

(A) P-2,Q-3,R-1,S-4 (B) P-4,Q-3,R-1,S-2 (C) P-2,Q-4,R-1,S-3 (D) P-2,Q-3,R-4,S-1

Options :

1. ✖ A
2. ✖ B
3. ✔ C
4. ✖ D

Question Number : 41 Question Type : MCQ

The value of $\int_0^4 \sqrt{16-x^2}\,dx$ *is*

(A) 12.57 (B) 50.24 (C) 25.12 (D) 3.14

Options :

1. ✔ A
2. ✖ B
3. ✖ C
4. ✖ D

Question Number : 42 Question Type : NAT

A rectangular field of area 20000 m^2 is to be divided into 6 different plots by fencing as shown in the figure. The value of L in m for which the total length of fencing becomes minimum is _____

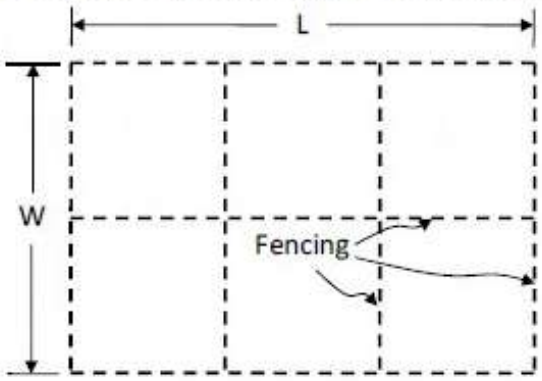

Correct Answer :

161 to 165

Question Number : 43 Question Type : MCQ

Match the following for a drilling system.

Component	Function
P. Drill	1. Utilization of energy in fragmenting rock
Q. Drill rod	2. Reduction of energy loss due to regrinding
R. Drill bit	3. Conversion of original form of energy into mechanical energy
S. Flushing medium	4. Transmission of energy from prime mover to applicator

(A) P-3,Q-1,R-2,S-4 (B) P-4,Q-1,R-3,S-2 (C) P-3,Q-4,R-1,S-2 (D) P-2,Q-1,R-3,S-4

Options :

1. ✖ A
2. ✖ B
3. ✔ C
4. ✖ D

Question Number : 44 Question Type : NAT

For the ventilation system shown, the combined resistance of the trunk airways and the shafts is 2.2 Ns^2m^{-8}. The resistances of splits A and B are 0.5 Ns^2m^{-8} and 0.8 Ns^2m^{-8} respectively. A regulator of size 2.0 m^2 is placed in split A. Considering the fan generates a pressure of 1000 Pa, the air flow in m^3/s in split B is _____

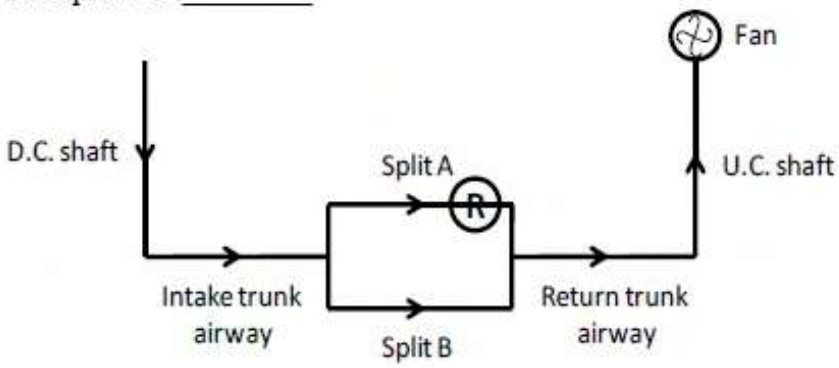

Correct Answer :

10.2 to 10.8

Question Number : 45 Question Type : NAT

A mine fan running at 300 rpm delivers 150 m^3/s of air at a pressure of 900 Pa. Fan and motor efficiencies are 75% and 90% respectively. If the fan speed is reduced to 250 rpm, the saving in electric power input to the motor in kW is _____

Correct Answer :

82 to 86

Question Number : 46 Question Type : NAT

Subsidence profile function, $s(x)$, along the lateral cross-section over a flat longwall panel is given as

$$s(x) = 0.8\left[0.996 - \tanh\left(\frac{8.3x}{D}\right)\right], \text{m}$$

where x = distance (m) from the inflection point and D = depth (m) of the seam. Considering that the inflection point lies vertically above the edge of the panel, the angle of draw in degrees for a depth of 250 m is _____

Correct Answer :

20 to 21

Question Number : 47 Question Type : NAT

A goaf void of 250 m^3 is filled in 3 hours by hydraulic sand stowing method. Density of the sand is 2.6 tonne/m^3. If the filling factor of goaf void is 0.9 and sand to water ratio in the stowing mixture is 1.0 tonne to 1.1 m^3, the stowing rate in m^3/h is _____

Correct Answer :

286 to 293

Question Number : 48 Question Type : NAT

A single-acting reciprocating pump delivers 0.018 m^3/s of water when running at 45 cycles per minute. The piston diameter is 300 mm and stroke length is 400 mm. The volumetric efficiency of the pump in % is _____

Correct Answer :

83 to 87

Question Number : 49 Question Type : MCQ

Match the method of mining with strength of orebody, type of support and orebody geometry.

Strength	Support	Geometry	Method
P. Strong	L. Unsupported	X. Tabular and steep	1. Cut-and-fill
Q. Moderate	M. Artificially supported	Y. Tabular and flat	2. Block caving
R. Weak	N. Self-supporting	Z. Massive and steep	3. Room and Pillar

(A) P-M-X-3, Q-N-Z-2, R-L-Y-1
(B) P-L-X-1, Q-N-Z-3, R-M-Y-2
(C) P-N-Y-3, Q-M-X-1, R-L-Z-2
(D) P-L-Z-1, Q-N-Y-3, R-M-X-2

Options :

1. ✖ A
2. ✖ B
3. ✔ C
4. ✖ D

Question Number : 50 Question Type : NAT

A mine air sample contains CH_4, CO, H_2, N_2 and O_2. The mine air analysis using Haldane apparatus gives the following results expressed in percentage of total sample volume.

Total contraction after combustion	: 10.0
CO_2 formed after combustion	: 6.0
O_2 consumed in combustion	: 9.5

The percentage of CH_4 in the sample analysed is _____

Correct Answer:
3.8 to 4.2

Question Number : 51 Question Type : NAT

The initial investment for a small scale mining project is Rs. 5.0 crore. Annual cash inflow for a life period of 4 years is given below.

Year	Cash inflow (Rs. crore)
1	1.5
2	2.0
3	2.0
4	1.5

The net present value of the project at an annual discount rate of 10% in Rs. crore is _____

Correct Answer :
0.5 to 0.6

Question Number : 52 Question Type : MCQ

Given the following linear programming problem,

Maximise $z = 3x_1 + 4x_2$

Subject to

$2x_1 + x_2 \le 6$

$2x_1 + 3x_2 \le 9$

$x_1 \ge 0, x_2 \ge 0$

the corner point feasible solution in terms of (x_1, x_2) is

(A) (1.5,0) (B) (1.25, 1.5) (C) (0.5, 1.0) (D) (2.25, 1.5)

Options :

1. ✖ A
2. ✖ B
3. ✖ C
4. ✔ D

Question Number : 53 Question Type : NAT

The 3-period torque-time diagram of a statically balanced hoist is shown in the figure.

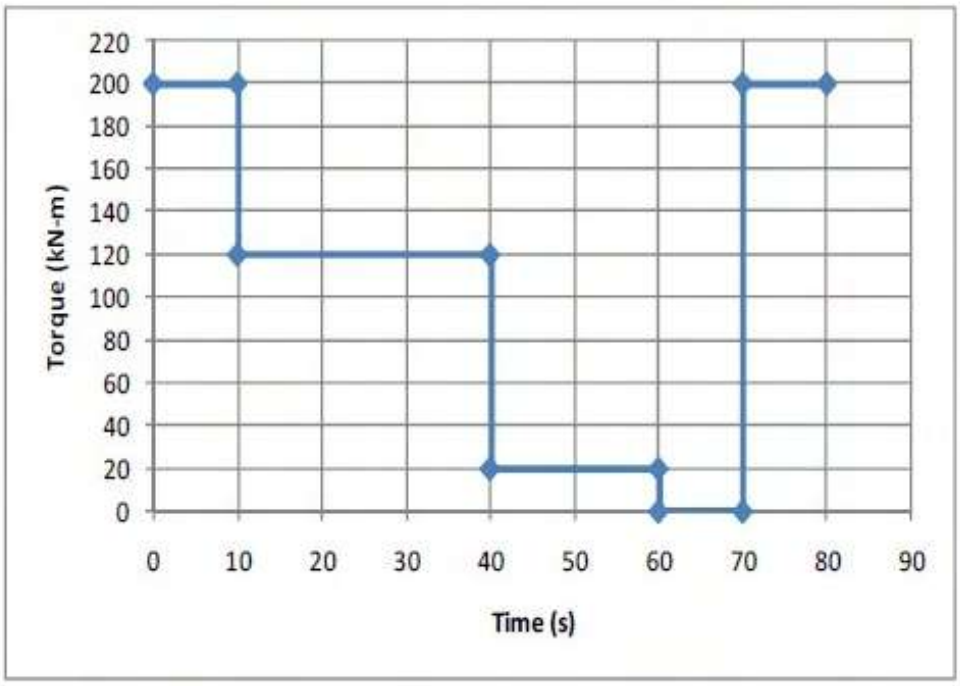

The rms torque for the motor in kN-m is _____

Correct Answer :
106 to 113

Question Number : 54 Question Type : NAT

Airborne PM_{10} concentration in a residential area is monitored for 24 hours by a respirable dust sampler. Initial and final weights of the filter paper are 2.3125 g and 2.6996 g respectively. The average airflow rate during sampling is 1.2 m^3/min. The PM_{10} concentration of the area in $\mu g\ m^{-3}$ is _____

Correct Answer :
220 to 228

Question Number : 55 Question Type : NAT

The assignment problem given requires four different jobs to be done on four different machines.

Job	Machine			
	M_1	M_2	M_3	M_4
J_1	27	35	36	30
J_2	33	37	36	35
J_3	30	26	28	24
J_4	38	29	35	33

The minimum cost of assignment is _____

Correct Answer:
116

Question Number : 56 Question Type : MCQ

Acceleration of a particle moving in a straight line is expressed by

$$\frac{d^2s}{dt^2} = 2t$$

where, s denotes distance (m) and t, time (s). At time $t = 0$, the distance and velocity of the particle are 0 m and 3 m/s respectively. The distance travelled by the particle in m after 3 s is

(A) 3 (B) 6 (C) 9 (D) 18

Options :
1. ✖ A
2. ✖ B
3. ✖ C
4. ✔ D

Question Number : 57 Question Type : NAT

Rock bolts have length $L = (150 + X)$ cm, where X is a random variable with probability density function

$$f(x) = \begin{cases} \frac{1}{4}(1-3x), & \text{if } -2 \le x \le 2 \\ 0, & \text{otherwise} \end{cases}$$

If 95% of the bolt lengths (L) lie in the interval $150 - c$ cm to $150 + c$ cm, the value of c is _____

Correct Answer :
1.88 to 1.92

Question Number : 58 Question Type : NAT

The properties for a bivariate distribution of two random variables X and Y are given below.

$$E(X)=24,\ E(Y)=36,\ E(X^2)=702,\ E(Y^2)=1524,\ E(XY)=1004$$

The correlation coefficient between X and Y is _____

Correct Answer :

0.8 to 0.85

Question Number : 59 Question Type : MCQ

Biaxial stresses at a point inside a pillar are shown in the figure.

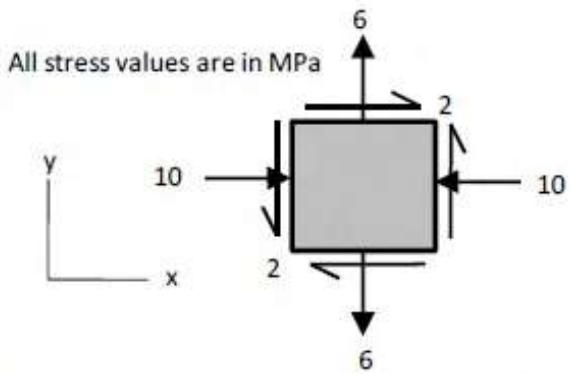

The magnitude of the maximum shear stress in MPa and its direction with the x-axis in degrees at the same point respectively are

(A) 8.25, 37.98 (B) 7.49, 37.98 (C) 8.25, 52.02 (D) 7.49, 52.02

Options :

1. ✔ A
2. ✖ B
3. ✖ C
4. ✖ D

Question Number : 60 Question Type : NAT

A circular tunnel is constructed in a biaxial far field stress (vertical stress p_0 and horizontal stress Kp_0) as shown in the figure.

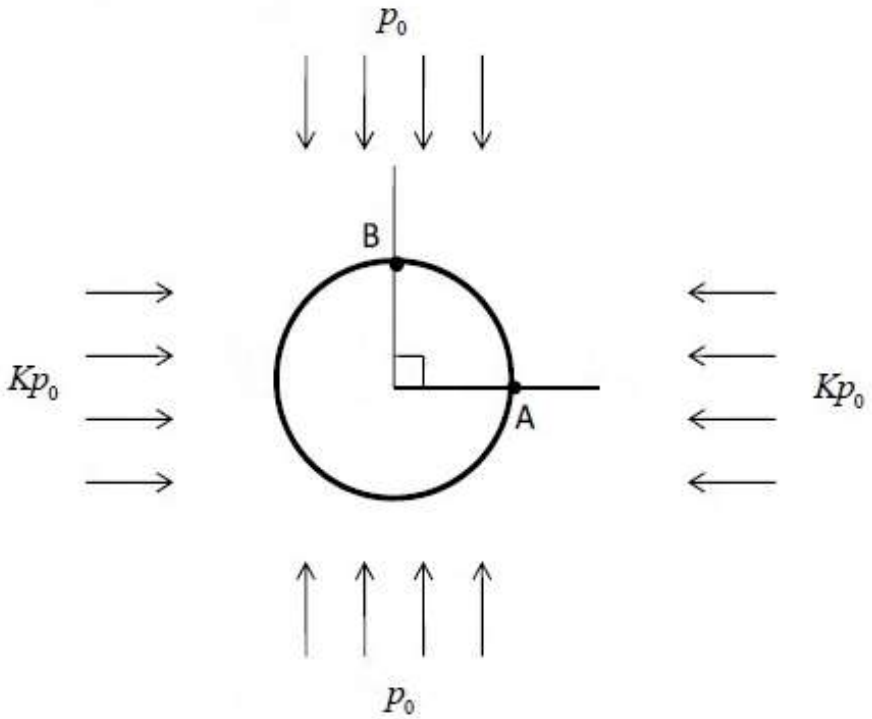

If the ratio of the tangential stress measured at the boundary points A and B is 3:1, the value of K is _____

Correct Answer :
0.6

Question Number : 61 Question Type : MCQ

Peak particle velocity (PPV) at points A and B are measured for a blast pattern as shown in the figure.

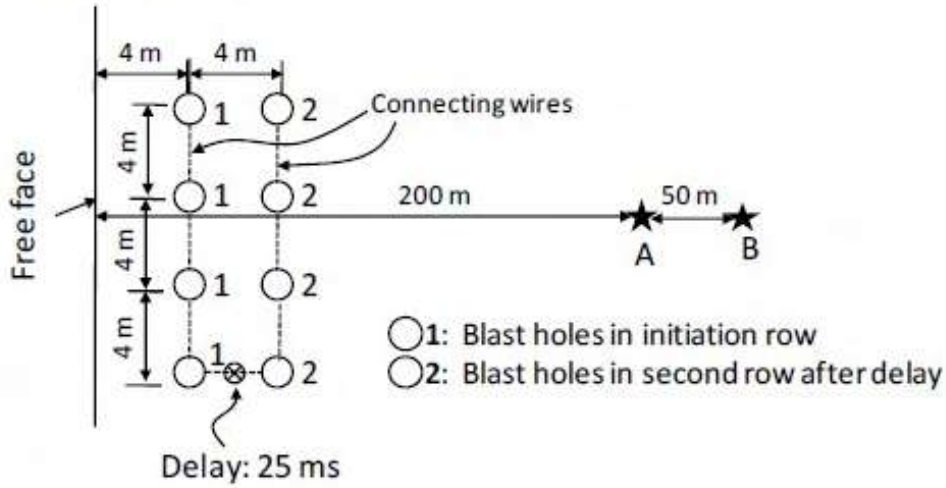

The relevant data are:

Amount of explosives per hole in the 1st row	: 500 kg
Amount of explosives per hole in the 2nd row	: 475 kg
PPV at point A	: 18 mm/s
PPV at point B	: 10 mm/s

Considering the following relationship,

$$PPV = K\left(\frac{D}{\sqrt{Q}}\right)^{-n} \text{, mm/s}$$

where D (in m) denotes the distance from the blast row to the measuring point and Q (in kg), maximum charge per delay. The site constants K and n respectively are

(A) 1002, 3.13 (B) 622, 2.92 (C) 823, 2.59 (D) 1245, 2.99

Options :

1. ✖ A
2. ✖ B
3. ✔ C
4. ✖ D

Question Number : 62 Question Type : MCQ

Copper ore of average grade 0.65% is mined, milled, smelted and then refined. The following information is available:

Mill recovery rate	: 85%
Average grade in mill concentrate	: 20%
Loss in smelting process	: 5 kg/tonne of concentrate
Loss in refining process	: 2 kg/tonne of blister copper

The amount of refined copper obtained per tonne of ore in kg is

(A) 5.10 (B) 5.37 (C) 5.52 (D) 6.50

Options :

1. ✖ A

2. ✔ B

3. ✖ C

4. ✖ D

Question Number : 63 Question Type : NAT

The ratio of horizontal to vertical in-situ stresses, K, at a mine field varies with depth, D (in m) as

$$K = \frac{267}{D} + 1.25$$

If the unit weight of overburden rock is 25 kN/m^3, the horizontal stress in MPa at a depth of 400 m is _____

Correct Answer :

19.10 to 19.25

Question Number : 64 Question Type : NAT

A coal seam of 2 m thickness is extracted by a longwall retreating panel with face length of 120 m. Web depth of the shearer is 0.6 m. Average manpower in the longwall face in a shift is 20. The specific gravity of in-situ coal is 1.4. If the shearer makes 4 full-face cuts in 3 shifts, the face OMS in tonne is _____

Correct Answer :

13 to 14

Question Number : 65 Question Type : NAT

A loaded dumper of total mass 75 tonne, having wheel diameter 1250 mm, runs on a haul road which offers an average specific rolling resistance of 260 N/tonne. The engine develops an axle torque of 15 kN-m. The starting acceleration of the dumper in m/s^2 is _____

Correct Answer :

0.055 to 0.065