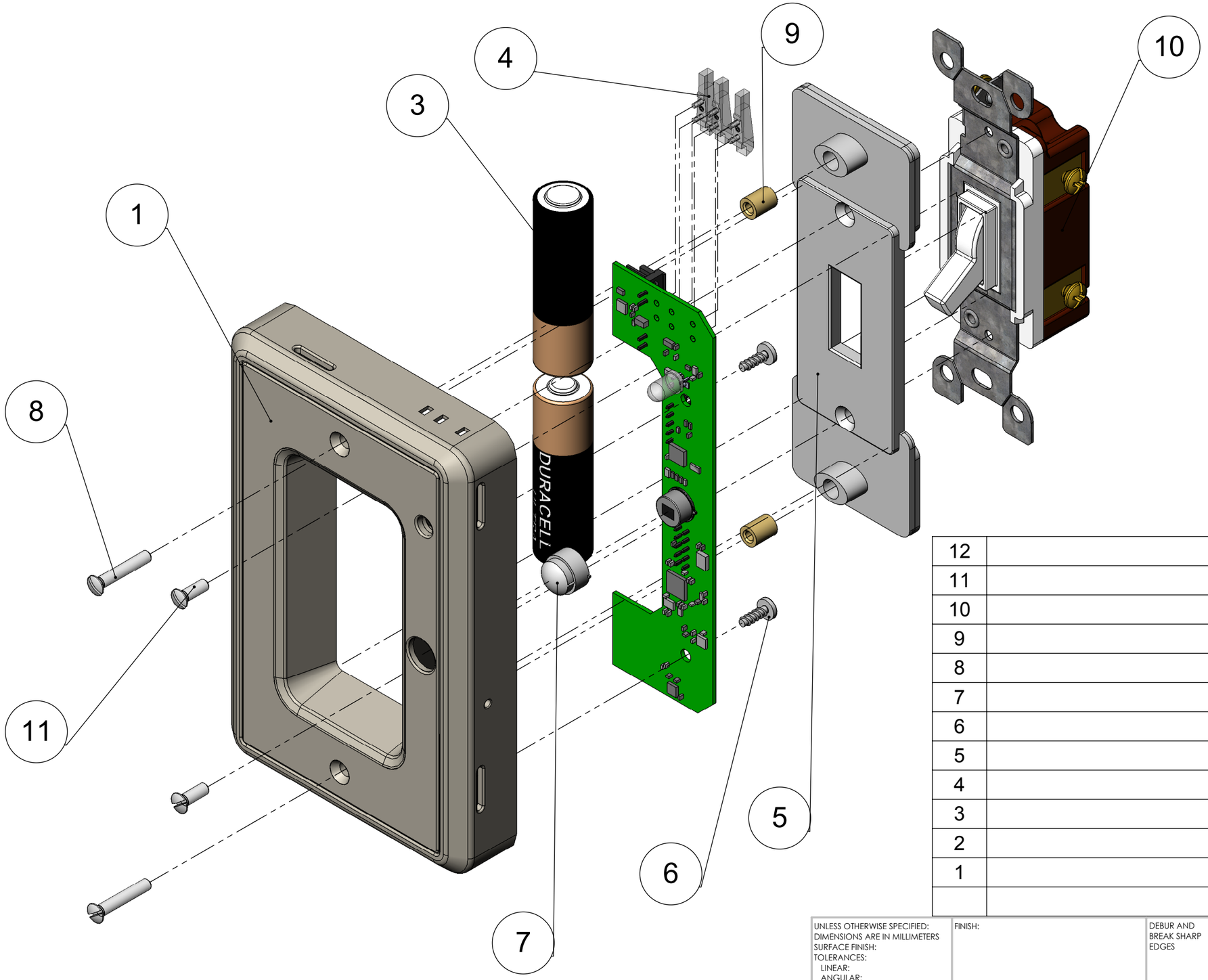

12			
11			
10			
9			
8			
7			
6			
5			
4			
3			
2			
1			

UNLESS OTHERWISE SPECIFIED:
DIMENSIONS ARE IN MILLIMETERS
SURFACE FINISH:
TOLERANCES:
LINEAR:
ANGULAR:

FINISH:

DEBUR AND BREAK SHARP EDGES

DO NOT SCALE DRAWING

REVISION

	NAME	SIGNATURE	DATE
DRAWN			
CHK'D			
APPV'D			
MFG			
Q.A			

TITLE:

Light switch old style

MATERIAL:

WEIGHT:

DWG NO.

A3

SCALE:1:1

SHEET 1 OF 1