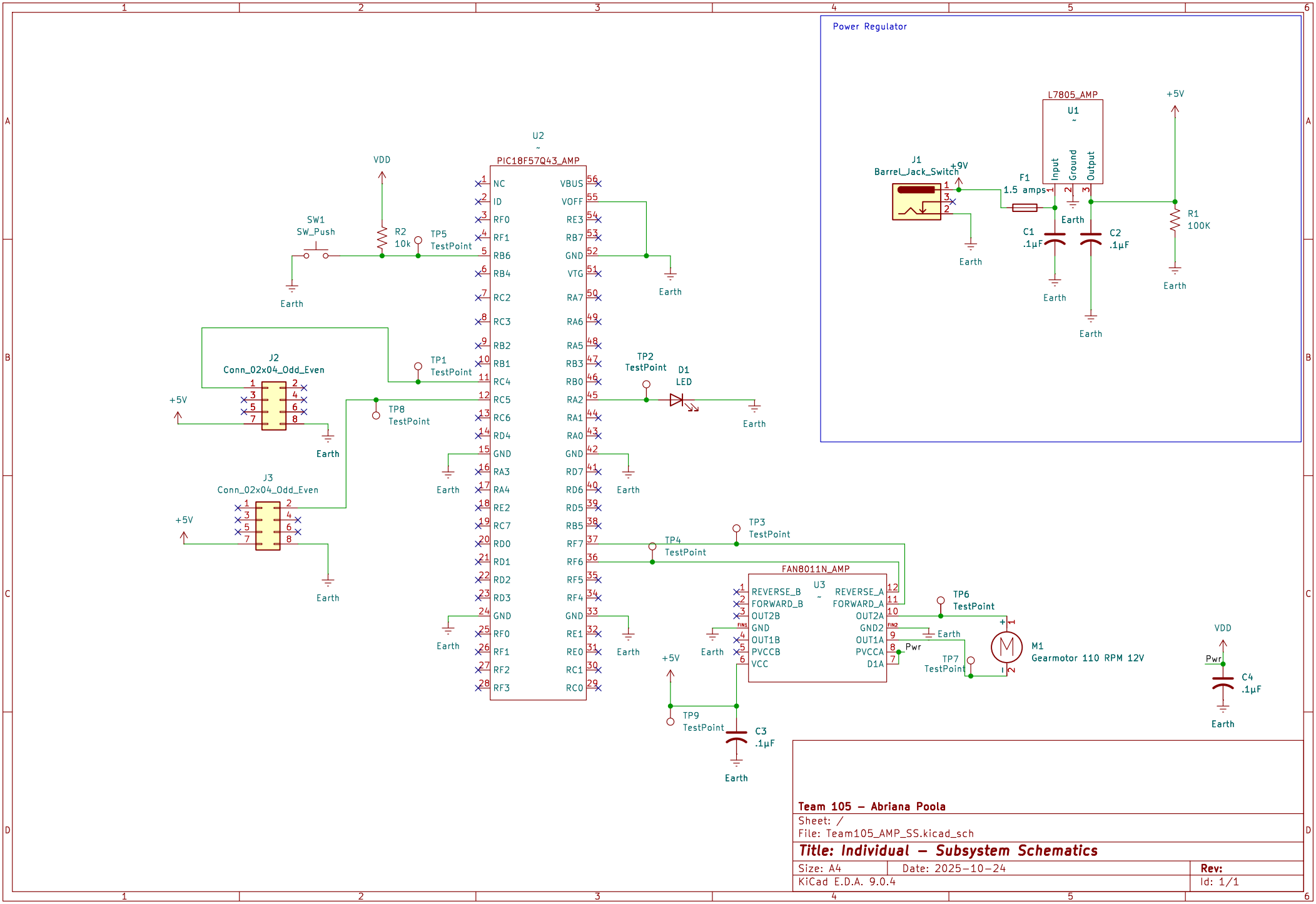

Team 105 – Abriana Poola

Sheet: /

File: Team105_AMP_SS.kicad_sch

Title: Individual – Subsystem Schematics

Size: A4	Date: 2025-10-24	**Rev:**
KiCad E.D.A. 9.0.4		Id: 1/1