CNN Arch

Allen.Huang

Review: LeNet-5

[LeCun et al., 1998]

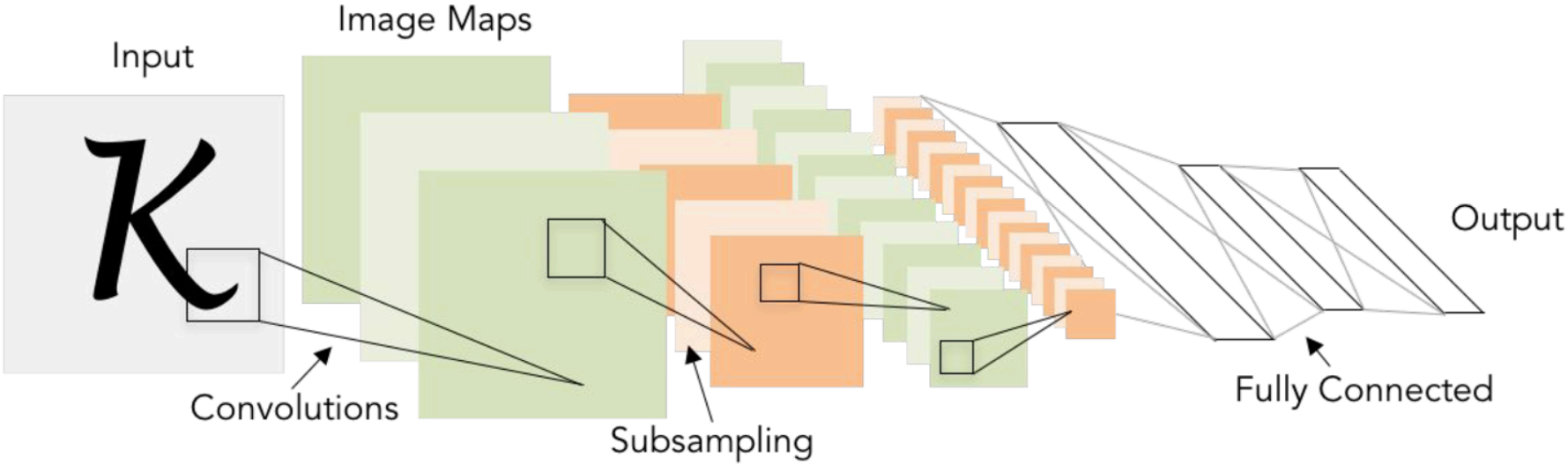

Conv filters were 5x5, applied at stride 1
Subsampling (Pooling) layers were 2x2 applied at stride 2
i.e. architecture is [CONV-POOL-CONV-POOL-FC-FC]

LeNet

卷积神经网络的开山之作，麻雀虽小五脏俱全，卷积层、池化层、全链接层一直沿用至今

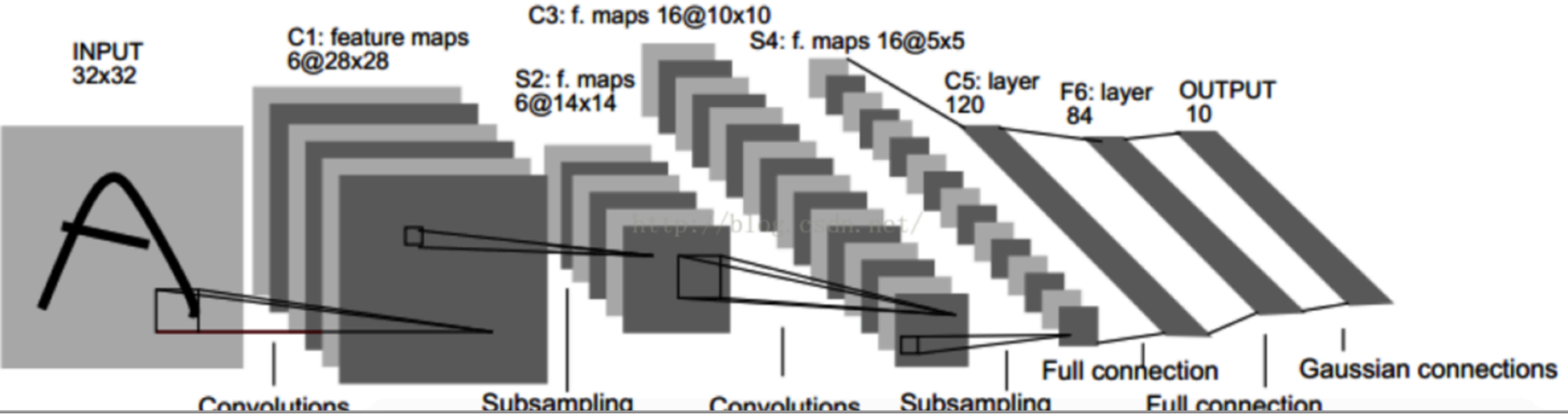

PyTorch/Keras-LeNet

```python
class LeNet(nn.Module):
    def __init__(self):
        super(LeNet, self).__init__()
        self.conv1 = nn.Conv2d(3, 6, 5)
        self.conv2 = nn.Conv2d(6, 16, 5)
        self.fc1   = nn.Linear(16*5*5, 120)
        self.fc2   = nn.Linear(120, 84)
        self.fc3   = nn.Linear(84, 10)

    def forward(self, x):
        out = F.relu(self.conv1(x))
        out = F.max_pool2d(out, 2)
        out = F.relu(self.conv2(out))
        out = F.max_pool2d(out, 2)
        out = out.view(out.size(0), -1)
        out = F.relu(self.fc1(out))
        out = F.relu(self.fc2(out))
        out = self.fc3(out)
        return out
```

```python
def LeNet():
    model=Sequential()
    model.add(Conv2D(32,(5,5),strides=(1,1),input_shape=(28,28,1),padding='valid',activation='relu',kernel_initializer='un
    model.add(MaxPool2D(pool_size=(2,2)))
    model.add(Conv2D(64,(5,5),strides=(1,1),padding='valid',activation='relu',kernel_initializer='uniform'))
    model.add(MaxPool2D(pool_size=(2,2)))
    model.add(Flatten())
    model.add(Dense(100,activation='relu'))
    model.add(Dense(10,activation='softmax'))
    return model
```

Case Study: AlexNet

[Krizhevsky et al. 2012]

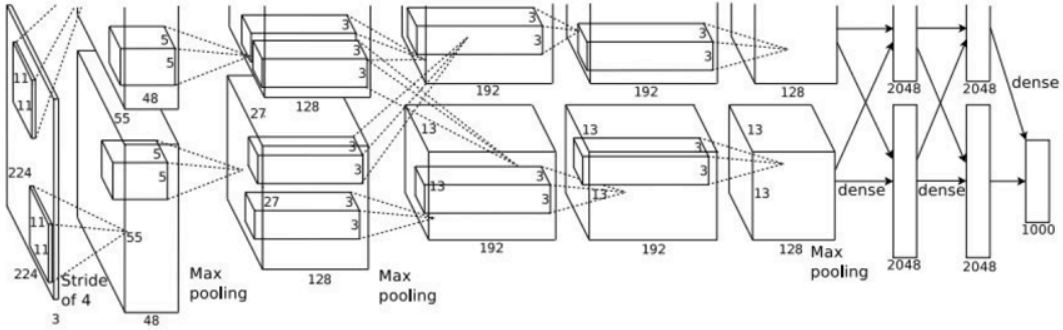

Architecture:

CONV1
MAX POOL1
NORM1
CONV2
MAX POOL2
NORM2
CONV3
CONV4
CONV5
Max POOL3
FC6
FC7
FC8

Figure copyright Alex Krizhevsky, Ilya Sutskever, and Geoffrey Hinton, 2012. Reproduced with permission.

Case Study: AlexNet

[Krizhevsky et al. 2012]

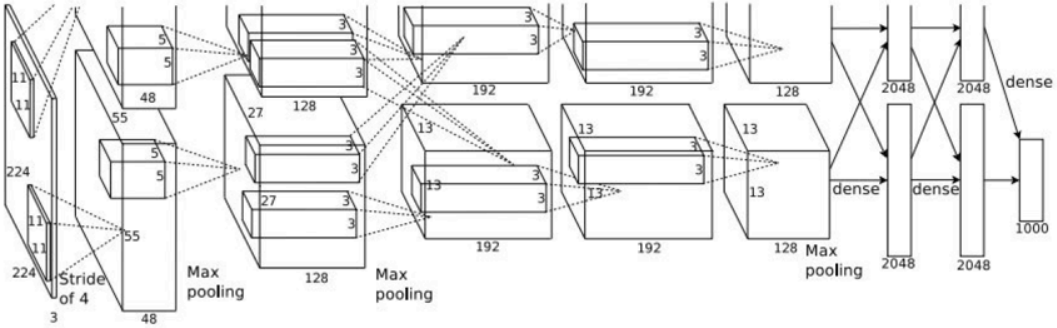

Input: 227x227x3 images

First layer (CONV1): 96 11x11 filters applied at stride 4
=>
Q: what is the output volume size? Hint: (227-11)/4+1 = 55

Figure copyright Alex Krizhevsky, Ilya Sutskever, and Geoffrey Hinton, 2012. Reproduced with permission.

Case Study: AlexNet

[Krizhevsky et al. 2012]

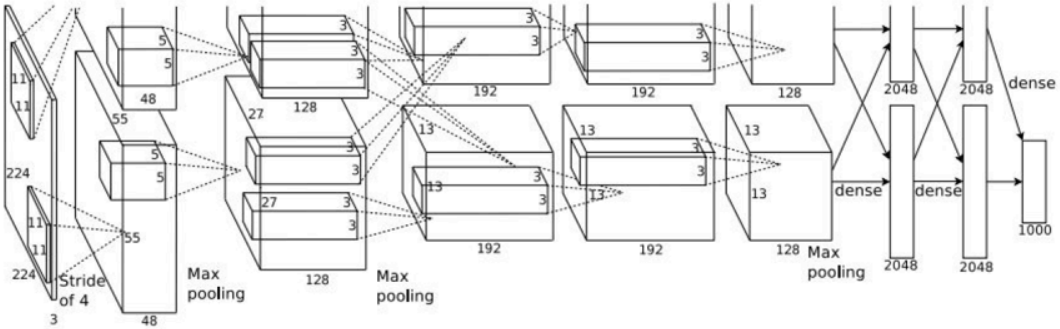

Input: 227x227x3 images

First layer (CONV1): 96 11x11 filters applied at stride 4
=>
Output volume **[55x55x96]**

Q: What is the total number of parameters in this layer?

Figure copyright Alex Krizhevsky, Ilya Sutskever, and Geoffrey Hinton, 2012. Reproduced with permission.

Case Study: AlexNet

[Krizhevsky et al. 2012]

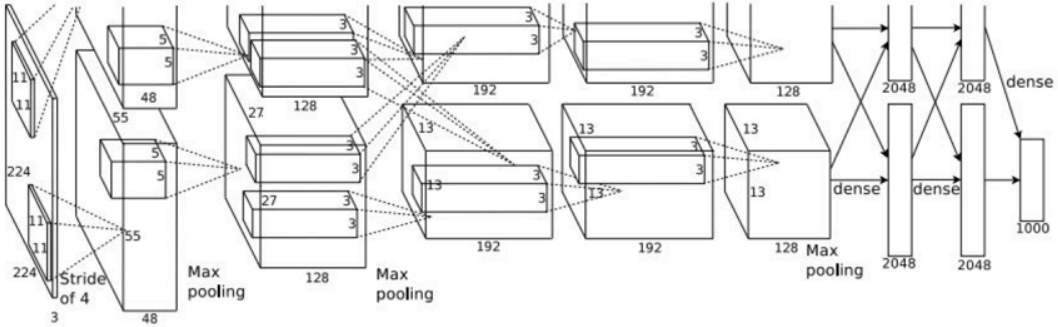

Input: 227x227x3 images

First layer (CONV1): 96 11x11 filters applied at stride 4
=>
Output volume **[55x55x96]**
Parameters: (11*11*3)*96 = **35K**

Figure copyright Alex Krizhevsky, Ilya Sutskever, and Geoffrey Hinton, 2012. Reproduced with permission.

Case Study: AlexNet

[Krizhevsky et al. 2012]

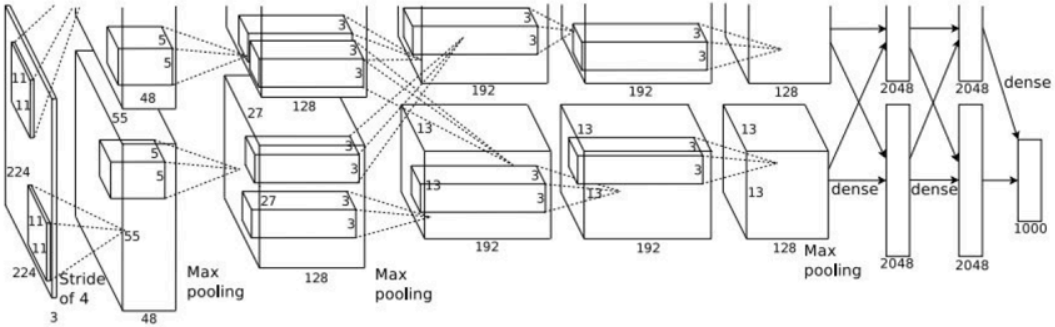

Input: 227x227x3 images
After CONV1: 55x55x96

Second layer (POOL1): 3x3 filters applied at stride 2

Q: what is the output volume size? Hint: (55-3)/2+1 = 27

Figure copyright Alex Krizhevsky, Ilya Sutskever, and Geoffrey Hinton, 2012. Reproduced with permission.

Case Study: AlexNet

[Krizhevsky et al. 2012]

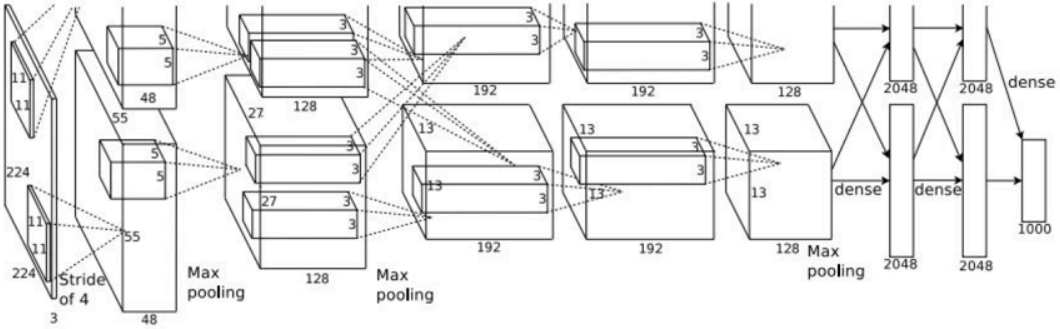

Input: 227x227x3 images
After CONV1: 55x55x96

Second layer (POOL1): 3x3 filters applied at stride 2
Output volume: 27x27x96

Q: what is the number of parameters in this layer?

Figure copyright Alex Krizhevsky, Ilya Sutskever, and Geoffrey Hinton, 2012. Reproduced with permission.

Case Study: AlexNet

[Krizhevsky et al. 2012]

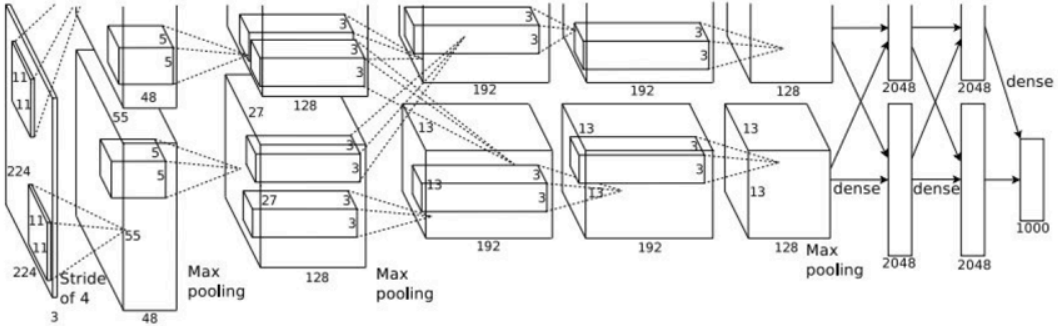

Input: 227x227x3 images
After CONV1: 55x55x96

Second layer (POOL1): 3x3 filters applied at stride 2
Output volume: 27x27x96
Parameters: 0!

Figure copyright Alex Krizhevsky, Ilya Sutskever, and Geoffrey Hinton, 2012. Reproduced with permission.

Case Study: AlexNet

[Krizhevsky et al. 2012]

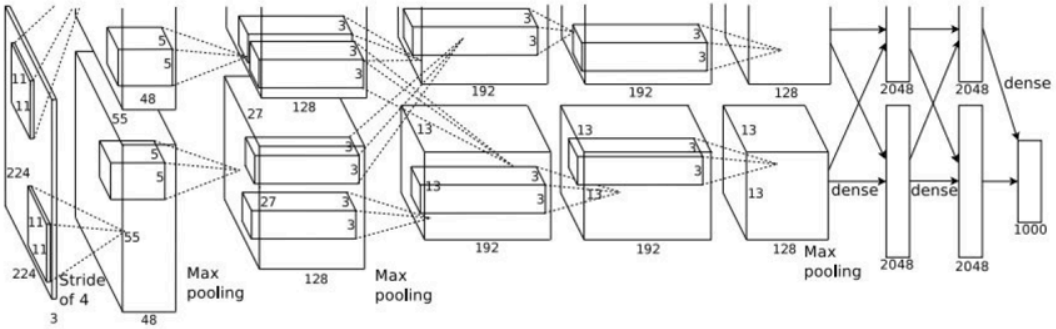

Input: 227x227x3 images
After CONV1: 55x55x96
After POOL1: 27x27x96
…

Figure copyright Alex Krizhevsky, Ilya Sutskever, and Geoffrey Hinton, 2012. Reproduced with permission.

Case Study: AlexNet

[Krizhevsky et al. 2012]

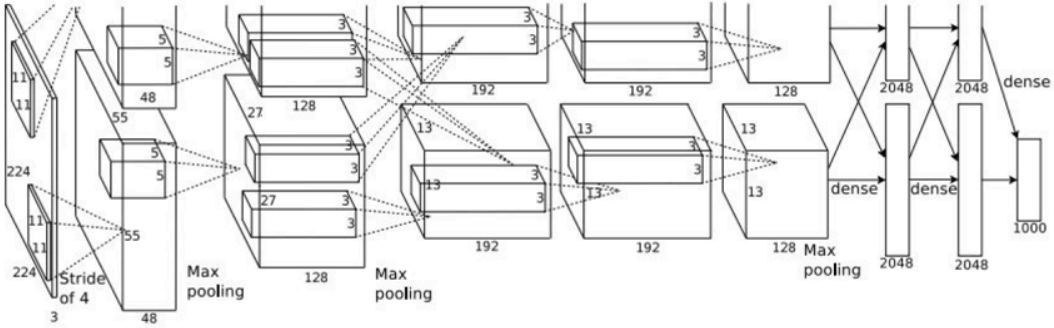

Full (simplified) AlexNet architecture:
[227x227x3] INPUT
[55x55x96] CONV1: 96 11x11 filters at stride 4, pad 0
[27x27x96] MAX POOL1: 3x3 filters at stride 2
[27x27x96] NORM1: Normalization layer
[27x27x256] CONV2: 256 5x5 filters at stride 1, pad 2
[13x13x256] MAX POOL2: 3x3 filters at stride 2
[13x13x256] NORM2: Normalization layer
[13x13x384] CONV3: 384 3x3 filters at stride 1, pad 1
[13x13x384] CONV4: 384 3x3 filters at stride 1, pad 1
[13x13x256] CONV5: 256 3x3 filters at stride 1, pad 1
[6x6x256] MAX POOL3: 3x3 filters at stride 2
[4096] FC6: 4096 neurons
[4096] FC7: 4096 neurons
[1000] FC8: 1000 neurons (class scores)

Figure copyright Alex Krizhevsky, Ilya Sutskever, and Geoffrey Hinton, 2012. Reproduced with permission.

Case Study: AlexNet

[Krizhevsky et al. 2012]

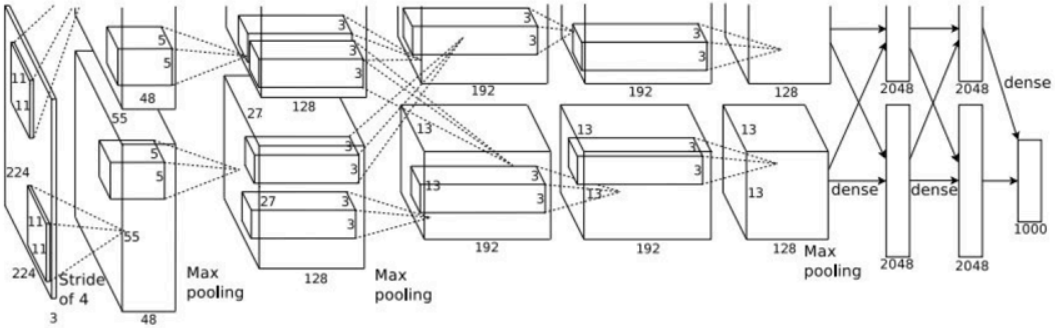

Full (simplified) AlexNet architecture:
[227x227x3] INPUT
[55x55x96] CONV1: 96 11x11 filters at stride 4, pad 0
[27x27x96] MAX POOL1: 3x3 filters at stride 2
[27x27x96] NORM1: Normalization layer
[27x27x256] CONV2: 256 5x5 filters at stride 1, pad 2
[13x13x256] MAX POOL2: 3x3 filters at stride 2
[13x13x256] NORM2: Normalization layer
[13x13x384] CONV3: 384 3x3 filters at stride 1, pad 1
[13x13x384] CONV4: 384 3x3 filters at stride 1, pad 1
[13x13x256] CONV5: 256 3x3 filters at stride 1, pad 1
[6x6x256] MAX POOL3: 3x3 filters at stride 2
[4096] FC6: 4096 neurons
[4096] FC7: 4096 neurons
[1000] FC8: 1000 neurons (class scores)

Details/Retrospectives:
- first use of ReLU
- used Norm layers (not common anymore)
- heavy data augmentation
- dropout 0.5
- batch size 128
- SGD Momentum 0.9
- Learning rate 1e-2, reduced by 10 manually when val accuracy plateaus
- L2 weight decay 5e-4
- 7 CNN ensemble: 18.2% -> 15.4%

Figure copyright Alex Krizhevsky, Ilya Sutskever, and Geoffrey Hinton, 2012. Reproduced with permission.

AlexNet(2012)

· 第一次引入了ReLU

激活函数的作用是为了引入非线性，因为在没有激活函数的时候，无论有多少层MLP，得到的网络输出依然是关于输入的线性函数。

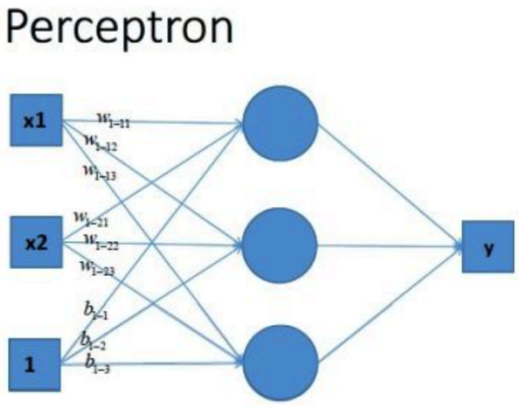

linear combination of three decision lines

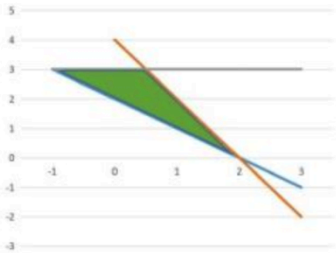

$w_{1-11} = 1, w_{1-12} = 1, b_{1-1} = -2$

$w_{1-21} = 2, w_{1-22} = 1, b_{1-2} = 4$

$w_{1-31} = 0, w_{1-32} = 1, b_{1-3} = 3$

AlexNet

虽然层数增加，但是仍然等价于单层。

在之前，传统的激活函数一般是sigmoid和tanh两种饱和非线性函数，就训练时间来说，使用这些饱和的非线性函数会比使用非饱和的非线性函数ReLU，模型收敛需要更长的时间。而对于大型的数据集来说，更快的学习过程意味着可以节省更多的时间。论文中是快了6倍

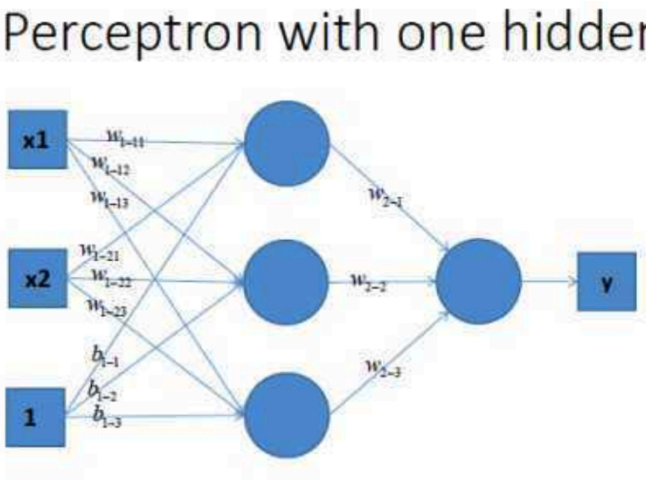

$$y = w_{2\text{-}1}(w_{1\text{-}11}x_1 + w_{1\text{-}21}x_2 + b_{1\text{-}1}) + w_{2\text{-}2}(w_{1\text{-}12}x_1 + w_{1\text{-}22}x_2 + b_{1\text{-}2}) + w_{2\text{-}3}(w_{1\text{-}13}x_1 + w_{1\text{-}23}x_2 + b_{1\text{-}3})$$

Case Study: AlexNet

[Krizhevsky et al. 2012]

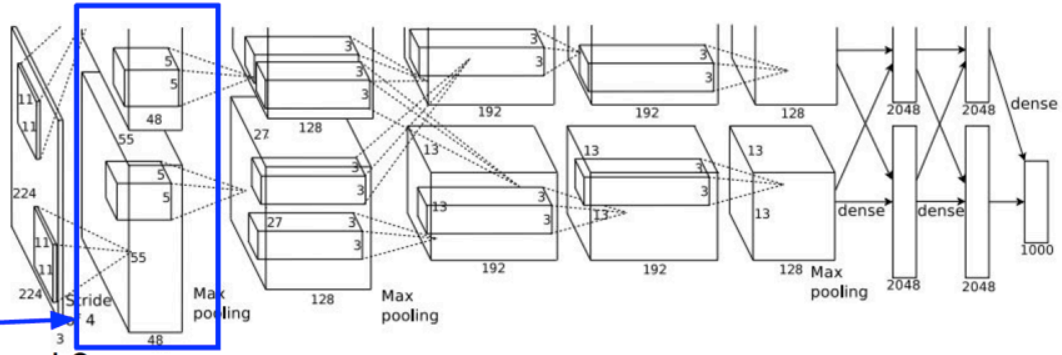

[55x55x48] x 2

Full (simplified) AlexNet architecture:
[227x227x3] INPUT
[55x55x96] CONV1: 96 11x11 filters at stride 4, pad 0
[27x27x96] MAX POOL1: 3x3 filters at stride 2
[27x27x96] NORM1: Normalization layer
[27x27x256] CONV2: 256 5x5 filters at stride 1, pad 2
[13x13x256] MAX POOL2: 3x3 filters at stride 2
[13x13x256] NORM2: Normalization layer
[13x13x384] CONV3: 384 3x3 filters at stride 1, pad 1
[13x13x384] CONV4: 384 3x3 filters at stride 1, pad 1
[13x13x256] CONV5: 256 3x3 filters at stride 1, pad 1
[6x6x256] MAX POOL3: 3x3 filters at stride 2
[4096] FC6: 4096 neurons
[4096] FC7: 4096 neurons
[1000] FC8: 1000 neurons (class scores)

Historical note: Trained on GTX 580 GPU with only 3 GB of memory. Network spread across 2 GPUs, half the neurons (feature maps) on each GPU.

Figure copyright Alex Krizhevsky, Ilya Sutskever, and Geoffrey Hinton, 2012. Reproduced with permission.

AlexNet

两个网络是并行的

第一次提出来分组卷积的概念，后面被ShuffleNet所改进

在当时，单个GTX 580 GPU只有3GB内存，这限制了可以在其上训练的网络的最大规模。事实证明，120万个训练样本才足以训练网络，这网络太大了，不适合在一个GPU上训练。因此我们将网络分布在两个GPU上。目前的GPU特别适合跨GPU并行化，因为它们能够直接从另一个GPU的内存中读出和写入，不需要通过主机内存。我们采用的并行方案基本上是在每个GPU中放置一半核（或神经元），还有一个额外的技巧：GPU间的通讯只在某些层进行。这就是说，例如，第3层的核需要从第2层中所有核映射输入。然而，第4层的核只需要从第3层中位于同一GPU的那些核映射输入。选择连接模式是一个交叉验证的问题，但是这让我们可以精确地调整通信量，直到它的计算量在可接受的部分。

Case Study: AlexNet

[Krizhevsky et al. 2012]

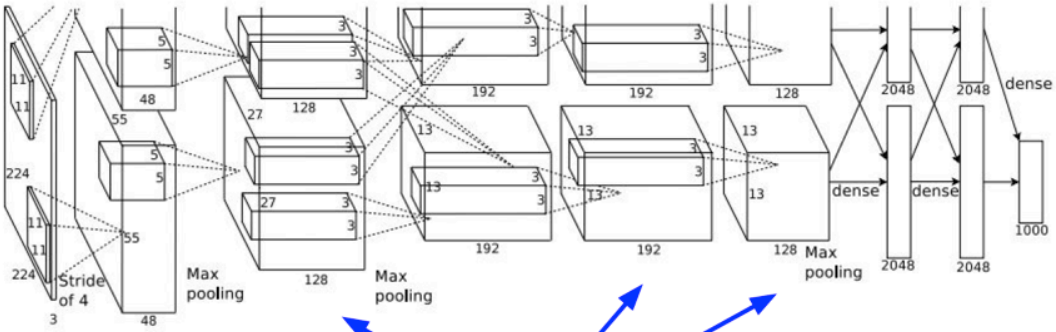

Full (simplified) AlexNet architecture:
[227x227x3] INPUT
[55x55x96] CONV1: 96 11x11 filters at stride 4, pad 0
[27x27x96] MAX POOL1: 3x3 filters at stride 2
[27x27x96] NORM1: Normalization layer
[27x27x256] CONV2: 256 5x5 filters at stride 1, pad 2
[13x13x256] MAX POOL2: 3x3 filters at stride 2
[13x13x256] NORM2: Normalization layer
[13x13x384] CONV3: 384 3x3 filters at stride 1, pad 1
[13x13x384] CONV4: 384 3x3 filters at stride 1, pad 1
[13x13x256] CONV5: 256 3x3 filters at stride 1, pad 1
[6x6x256] MAX POOL3: 3x3 filters at stride 2
[4096] FC6: 4096 neurons
[4096] FC7: 4096 neurons
[1000] FC8: 1000 neurons (class scores)

CONV1, CONV2, CONV4, CONV5:
Connections only with feature maps
on same GPU

Figure copyright Alex Krizhevsky, Ilya Sutskever, and Geoffrey Hinton, 2012. Reproduced with permission.

Case Study: AlexNet

[Krizhevsky et al. 2012]

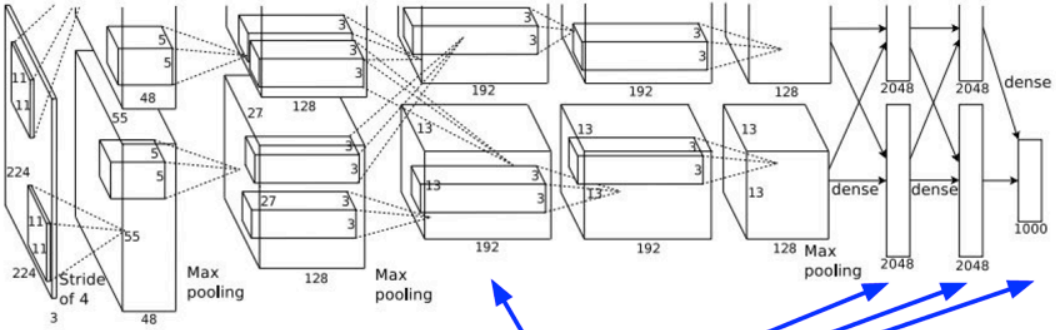

Full (simplified) AlexNet architecture:
[227x227x3] INPUT
[55x55x96] CONV1: 96 11x11 filters at stride 4, pad 0
[27x27x96] MAX POOL1: 3x3 filters at stride 2
[27x27x96] NORM1: Normalization layer
[27x27x256] CONV2: 256 5x5 filters at stride 1, pad 2
[13x13x256] MAX POOL2: 3x3 filters at stride 2
[13x13x256] NORM2: Normalization layer
[13x13x384] CONV3: 384 3x3 filters at stride 1, pad 1
[13x13x384] CONV4: 384 3x3 filters at stride 1, pad 1
[13x13x256] CONV5: 256 3x3 filters at stride 1, pad 1
[6x6x256] MAX POOL3: 3x3 filters at stride 2
[4096] FC6: 4096 neurons
[4096] FC7: 4096 neurons
[1000] FC8: 1000 neurons (class scores)

CONV3, FC6, FC7, FC8:
Connections with all feature maps in preceding layer, communication across GPUs

Figure copyright Alex Krizhevsky, Ilya Sutskever, and Geoffrey Hinton, 2012. Reproduced with permission.

AlexNet

·Overlap Pooling

池化操作提取的是一小部分的代表性特征，减少冗余信息。传统的卷积层中，相邻的池化单元是不重叠的，具体点说就是，对于一个 的feature map，如果池化的stride=2、window的size=2，我们得到的就是传统的池化操作。如果stride=2，window的size=3，那么在进行池化的过程中，相邻的池化window之间会有重叠的部分，这种池化就是overlapping pooling。论文也指出，这种池化只能“稍微”减轻过拟合。

AlexNet

·数据增强

1）截取平移、对称：

从256x256的图片中随机截取224x224的部分出来：

训练时，取出所有的patch以及它们的水平对称结果，这种操作将整个数据集放大了2048倍，为什么是2048倍呢？因为在vertical和horizontal两个方向上，各有32个位置可以进行crop，也就是 1024个patches。之后这些patch进行翻转，得到2048个patch。

测试时，取四个角以及中心共五处的patch，加以对这些patch进行水平对称得到的patch来测试网络（一共是10个patches），也就是在预测时将10个patches逐一计算出softmax后的结果，再对所有的预测结果取平均，得到真正的分类。

AlexNet

2）、改变RGB通道的强度：

也就是，对每个RGB图片的像素

$$I_{xy} = [I_{xy}^R, I_{xy}^G, I_{xy}^B]^T$$

变为：

$$I_{xy} = [I_{xy}^R, I_{xy}^G, I_{xy}^B]^T + [p_1, p_2, p_3][\alpha_1\lambda_1, \alpha_2\lambda_2, \alpha_3\lambda_3]^T$$

这里的p[illegible]的高斯随机变量。

这么做的原因是利用了自然图片的一条重要性质：物体的鉴别特征并不会因为图片强度和颜色的变化而变化，也就是说，一定程度上改变图片的对比度、亮度、物体的颜色，并不会影响我们对物体的识别。在ImageNet上使用这个方法，降低了1%的top-1 error。

ImageNet Large Scale Visual Recognition Challenge (ILSVRC) winners

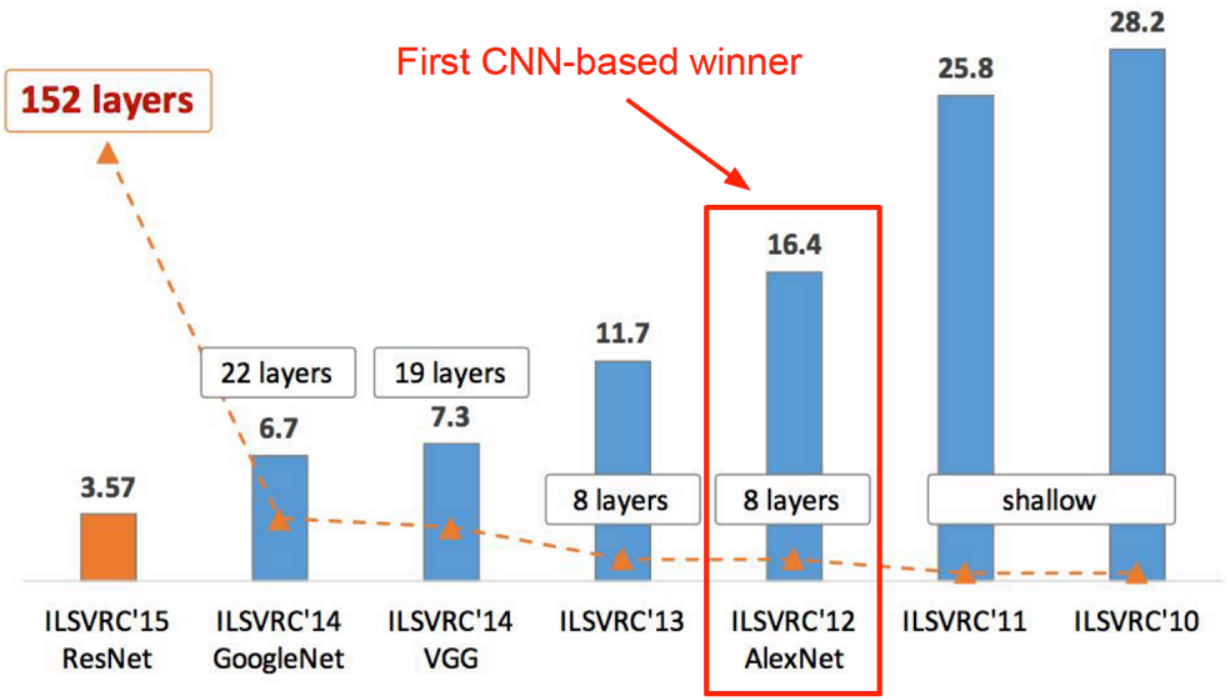

Figure copyright Kaiming He, 2016. Reproduced with permission.

ImageNet Large Scale Visual Recognition Challenge (ILSVRC) winners

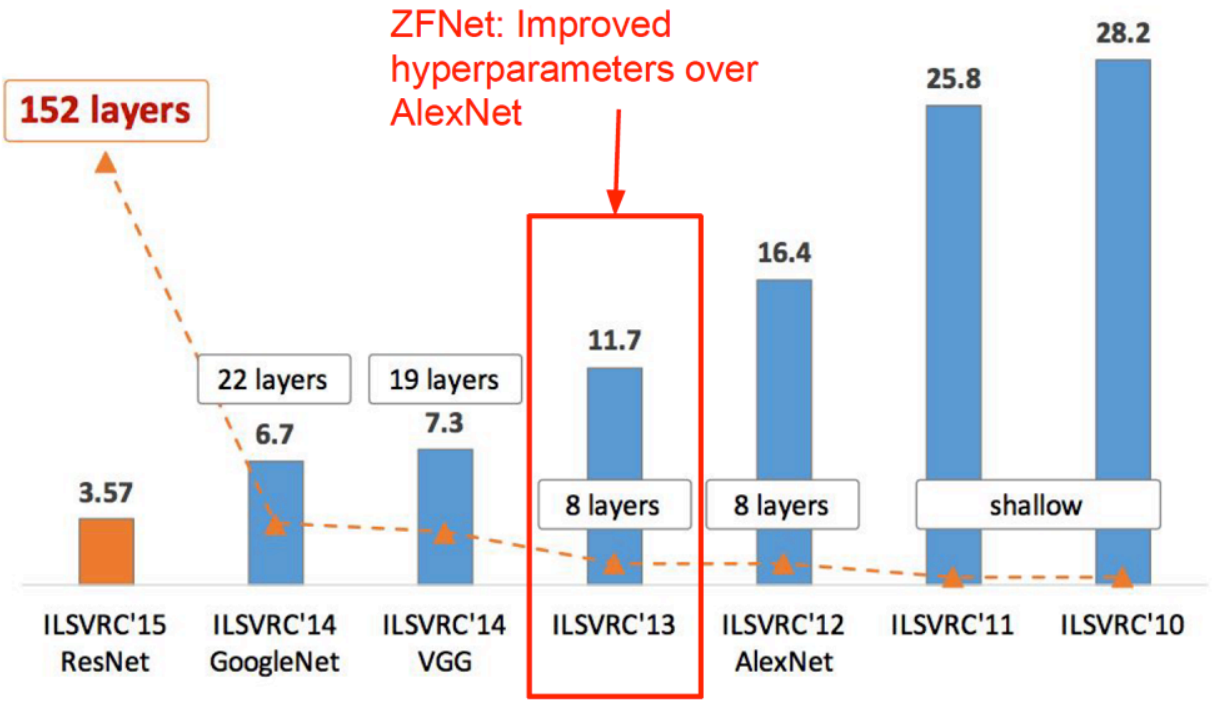

Figure copyright Kaiming He, 2016. Reproduced with permission.

ZFNet

[Zeiler and Fergus, 2013]

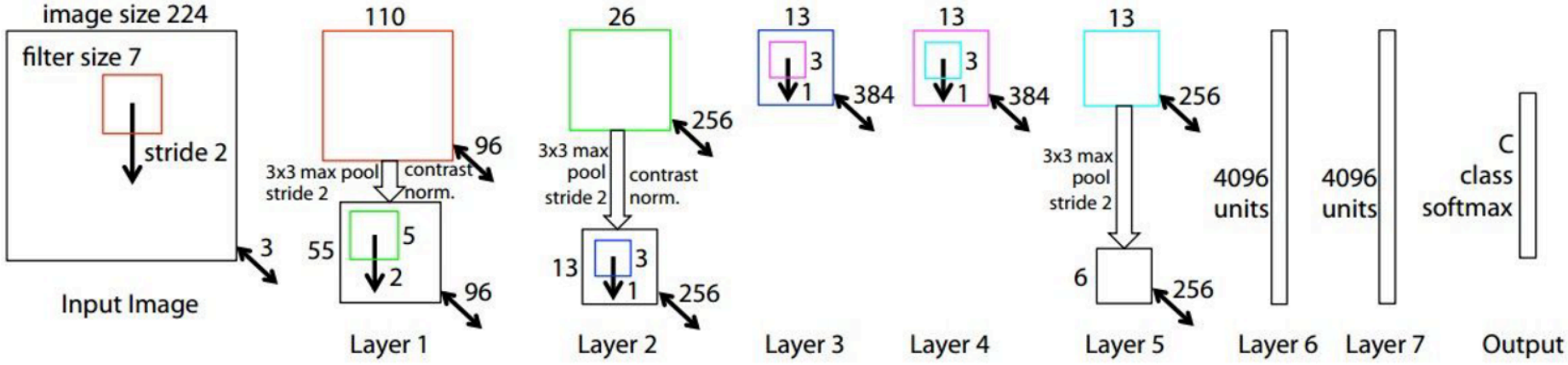

TODO: remake figure

AlexNet but:

CONV1: change from (11x11 stride 4) to (7x7 stride 2)

CONV3,4,5: instead of 384, 384, 256 filters use 512, 1024, 512

ImageNet top 5 error: 16.4% -> 11.7%

ImageNet Large Scale Visual Recognition Challenge (ILSVRC) winners

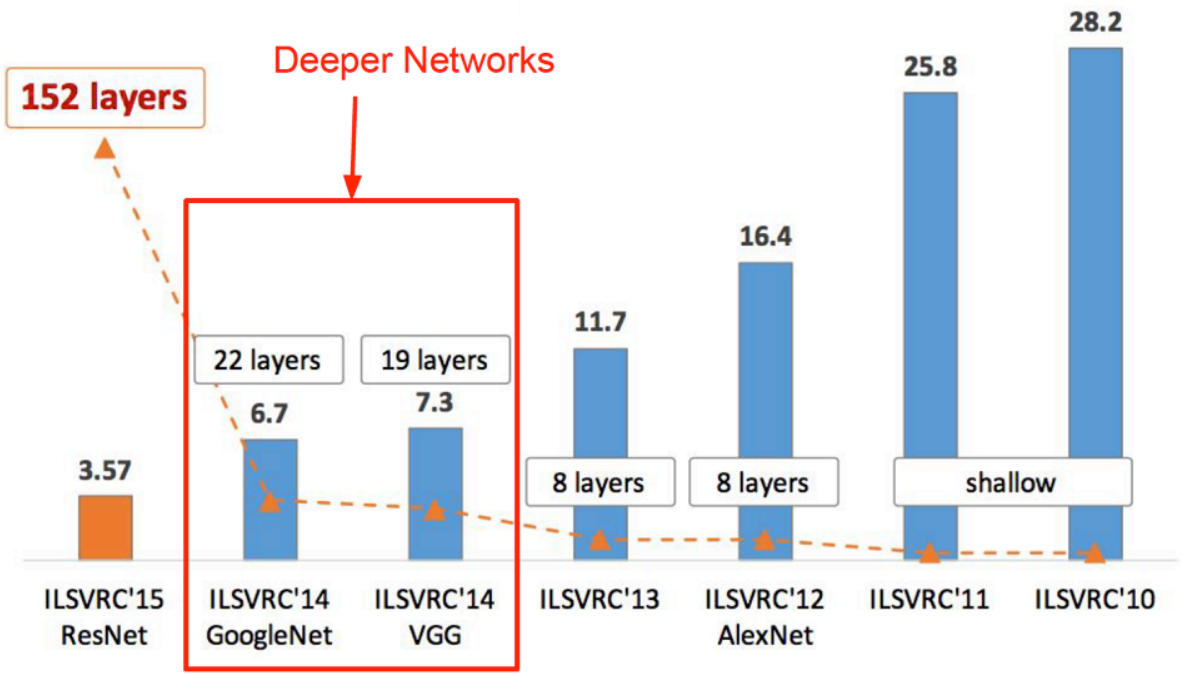

Case Study: VGGNet

[Simonyan and Zisserman, 2014]

Small filters, Deeper networks

8 layers (AlexNet)
-> 16 - 19 layers (VGG16Net)

Only 3x3 CONV stride 1, pad 1
and 2x2 MAX POOL stride 2

11.7% top 5 error in ILSVRC'13
(ZFNet)
-> 7.3% top 5 error in ILSVRC'14

Case Study: VGGNet

[Simonyan and Zisserman, 2014]

Q: Why use smaller filters? (3x3 conv)

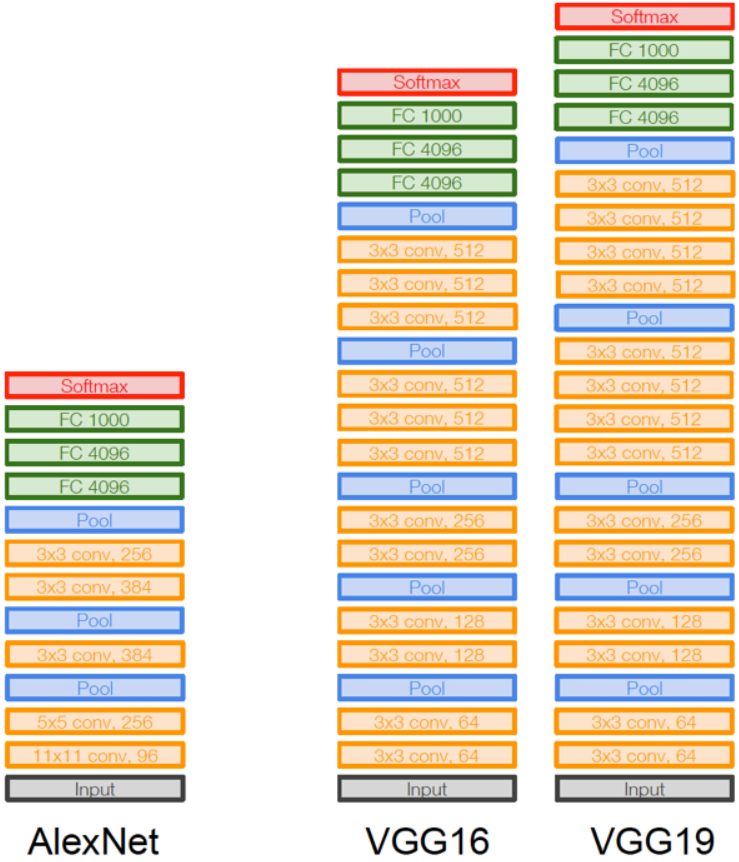

Case Study: VGGNet

[Simonyan and Zisserman, 2014]

Q: Why use smaller filters? (3x3 conv)

Stack of three 3x3 conv (stride 1) layers has same **effective receptive field** as one 7x7 conv layer

Q: What is the effective receptive field of three 3x3 conv (stride 1) layers?

Case Study: VGGNet

[Simonyan and Zisserman, 2014]

Q: Why use smaller filters? (3x3 conv)

Stack of three 3x3 conv (stride 1) layers has same **effective receptive field** as one 7x7 conv layer

[7x7]

Case Study: VGGNet

[Simonyan and Zisserman, 2014]

Q: Why use smaller filters? (3x3 conv)

Stack of three 3x3 conv (stride 1) layers has same **effective receptive field** as one 7x7 conv layer

But deeper, more non-linearities

And fewer parameters: $3 * (3^2C^2)$ vs. 7^2C^2 for C channels per layer

(not counting biases)

INPUT: [224x224x3] memory: 224*224*3=150K params: 0
CONV3-64: [224x224x64] memory: 224*224*64=3.2M params: (3*3*3)*64 = 1,728
CONV3-64: [224x224x64] memory: 224*224*64=3.2M params: (3*3*64)*64 = 36,864
POOL2: [112x112x64] memory: 112*112*64=800K params: 0
CONV3-128: [112x112x128] memory: 112*112*128=1.6M params: (3*3*64)*128 = 73,728
CONV3-128: [112x112x128] memory: 112*112*128=1.6M params: (3*3*128)*128 = 147,456
POOL2: [56x56x128] memory: 56*56*128=400K params: 0
CONV3-256: [56x56x256] memory: 56*56*256=800K params: (3*3*128)*256 = 294,912
CONV3-256: [56x56x256] memory: 56*56*256=800K params: (3*3*256)*256 = 589,824
CONV3-256: [56x56x256] memory: 56*56*256=800K params: (3*3*256)*256 = 589,824
POOL2: [28x28x256] memory: 28*28*256=200K params: 0
CONV3-512: [28x28x512] memory: 28*28*512=400K params: (3*3*256)*512 = 1,179,648
CONV3-512: [28x28x512] memory: 28*28*512=400K params: (3*3*512)*512 = 2,359,296
CONV3-512: [28x28x512] memory: 28*28*512=400K params: (3*3*512)*512 = 2,359,296
POOL2: [14x14x512] memory: 14*14*512=100K params: 0
CONV3-512: [14x14x512] memory: 14*14*512=100K params: (3*3*512)*512 = 2,359,296
CONV3-512: [14x14x512] memory: 14*14*512=100K params: (3*3*512)*512 = 2,359,296
CONV3-512: [14x14x512] memory: 14*14*512=100K params: (3*3*512)*512 = 2,359,296
POOL2: [7x7x512] memory: 7*7*512=25K params: 0
FC: [1x1x4096] memory: 4096 params: 7*7*512*4096 = 102,760,448
FC: [1x1x4096] memory: 4096 params: 4096*4096 = 16,777,216
FC: [1x1x1000] memory: 1000 params: 4096*1000 = 4,096,000

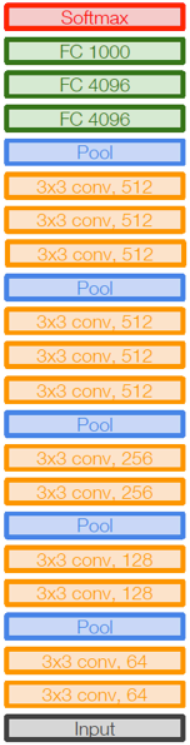

VGG16

(not counting biases)

INPUT: [224x224x3] memory: 224*224*3=150K params: 0
CONV3-64: [224x224x64] memory: 224*224*64=3.2M params: (3*3*3)*64 = 1,728
CONV3-64: [224x224x64] memory: 224*224*64=3.2M params: (3*3*64)*64 = 36,864
POOL2: [112x112x64] memory: 112*112*64=800K params: 0
CONV3-128: [112x112x128] memory: 112*112*128=1.6M params: (3*3*64)*128 = 73,728
CONV3-128: [112x112x128] memory: 112*112*128=1.6M params: (3*3*128)*128 = 147,456
POOL2: [56x56x128] memory: 56*56*128=400K params: 0
CONV3-256: [56x56x256] memory: 56*56*256=800K params: (3*3*128)*256 = 294,912
CONV3-256: [56x56x256] memory: 56*56*256=800K params: (3*3*256)*256 = 589,824
CONV3-256: [56x56x256] memory: 56*56*256=800K params: (3*3*256)*256 = 589,824
POOL2: [28x28x256] memory: 28*28*256=200K params: 0
CONV3-512: [28x28x512] memory: 28*28*512=400K params: (3*3*256)*512 = 1,179,648
CONV3-512: [28x28x512] memory: 28*28*512=400K params: (3*3*512)*512 = 2,359,296
CONV3-512: [28x28x512] memory: 28*28*512=400K params: (3*3*512)*512 = 2,359,296
POOL2: [14x14x512] memory: 14*14*512=100K params: 0
CONV3-512: [14x14x512] memory: 14*14*512=100K params: (3*3*512)*512 = 2,359,296
CONV3-512: [14x14x512] memory: 14*14*512=100K params: (3*3*512)*512 = 2,359,296
CONV3-512: [14x14x512] memory: 14*14*512=100K params: (3*3*512)*512 = 2,359,296
POOL2: [7x7x512] memory: 7*7*512=25K params: 0
FC: [1x1x4096] memory: 4096 params: 7*7*512*4096 = 102,760,448
FC: [1x1x4096] memory: 4096 params: 4096*4096 = 16,777,216
FC: [1x1x1000] memory: 1000 params: 4096*1000 = 4,096,000

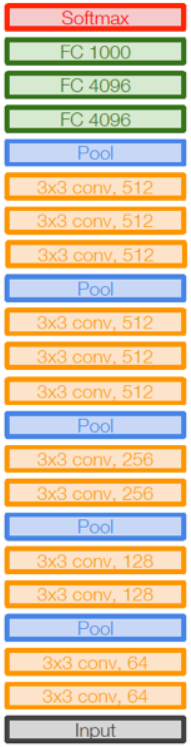

VGG16

TOTAL memory: 24M * 4 bytes ~= 96MB / image (only forward! ~*2 for bwd)
TOTAL params: 138M parameters

(not counting biases)

INPUT: [224x224x3] memory: 224*224*3=150K params: 0
CONV3-64: [224x224x64] memory: **224*224*64=3.2M** params: (3*3*3)*64 = 1,728
CONV3-64: [224x224x64] memory: **224*224*64=3.2M** params: (3*3*64)*64 = 36,864
POOL2: [112x112x64] memory: 112*112*64=800K params: 0
CONV3-128: [112x112x128] memory: 112*112*128=1.6M params: (3*3*64)*128 = 73,728
CONV3-128: [112x112x128] memory: 112*112*128=1.6M params: (3*3*128)*128 = 147,456
POOL2: [56x56x128] memory: 56*56*128=400K params: 0
CONV3-256: [56x56x256] memory: 56*56*256=800K params: (3*3*128)*256 = 294,912
CONV3-256: [56x56x256] memory: 56*56*256=800K params: (3*3*256)*256 = 589,824
CONV3-256: [56x56x256] memory: 56*56*256=800K params: (3*3*256)*256 = 589,824
POOL2: [28x28x256] memory: 28*28*256=200K params: 0
CONV3-512: [28x28x512] memory: 28*28*512=400K params: (3*3*256)*512 = 1,179,648
CONV3-512: [28x28x512] memory: 28*28*512=400K params: (3*3*512)*512 = 2,359,296
CONV3-512: [28x28x512] memory: 28*28*512=400K params: (3*3*512)*512 = 2,359,296
POOL2: [14x14x512] memory: 14*14*512=100K params: 0
CONV3-512: [14x14x512] memory: 14*14*512=100K params: (3*3*512)*512 = 2,359,296
CONV3-512: [14x14x512] memory: 14*14*512=100K params: (3*3*512)*512 = 2,359,296
CONV3-512: [14x14x512] memory: 14*14*512=100K params: (3*3*512)*512 = 2,359,296
POOL2: [7x7x512] memory: 7*7*512=25K params: 0
FC: [1x1x4096] memory: 4096 params: 7*7*512*4096 = **102,760,448**
FC: [1x1x4096] memory: 4096 params: 4096*4096 = 16,777,216
FC: [1x1x1000] memory: 1000 params: 4096*1000 = 4,096,000

Note:

Most memory is in early CONV

Most params are in late FC

TOTAL memory: 24M * 4 bytes ~= 96MB / image (only forward! ~*2 for bwd)
TOTAL params: 138M parameters

(not counting biases)

INPUT: [224x224x3] memory: 224*224*3=150K params: 0
CONV3-64: [224x224x64] memory: 224*224*64=3.2M params: (3*3*3)*64 = 1,728
CONV3-64: [224x224x64] memory: 224*224*64=3.2M params: (3*3*64)*64 = 36,864
POOL2: [112x112x64] memory: 112*112*64=800K params: 0
CONV3-128: [112x112x128] memory: 112*112*128=1.6M params: (3*3*64)*128 = 73,728
CONV3-128: [112x112x128] memory: 112*112*128=1.6M params: (3*3*128)*128 = 147,456
POOL2: [56x56x128] memory: 56*56*128=400K params: 0
CONV3-256: [56x56x256] memory: 56*56*256=800K params: (3*3*128)*256 = 294,912
CONV3-256: [56x56x256] memory: 56*56*256=800K params: (3*3*256)*256 = 589,824
CONV3-256: [56x56x256] memory: 56*56*256=800K params: (3*3*256)*256 = 589,824
POOL2: [28x28x256] memory: 28*28*256=200K params: 0
CONV3-512: [28x28x512] memory: 28*28*512=400K params: (3*3*256)*512 = 1,179,648
CONV3-512: [28x28x512] memory: 28*28*512=400K params: (3*3*512)*512 = 2,359,296
CONV3-512: [28x28x512] memory: 28*28*512=400K params: (3*3*512)*512 = 2,359,296
POOL2: [14x14x512] memory: 14*14*512=100K params: 0
CONV3-512: [14x14x512] memory: 14*14*512=100K params: (3*3*512)*512 = 2,359,296
CONV3-512: [14x14x512] memory: 14*14*512=100K params: (3*3*512)*512 = 2,359,296
CONV3-512: [14x14x512] memory: 14*14*512=100K params: (3*3*512)*512 = 2,359,296
POOL2: [7x7x512] memory: 7*7*512=25K params: 0
FC: [1x1x4096] memory: 4096 params: 7*7*512*4096 = 102,760,448
FC: [1x1x4096] memory: 4096 params: 4096*4096 = 16,777,216
FC: [1x1x1000] memory: 1000 params: 4096*1000 = 4,096,000

TOTAL memory: 24M * 4 bytes ~= 96MB / image (only forward! ~*2 for bwd)
TOTAL params: 138M parameters

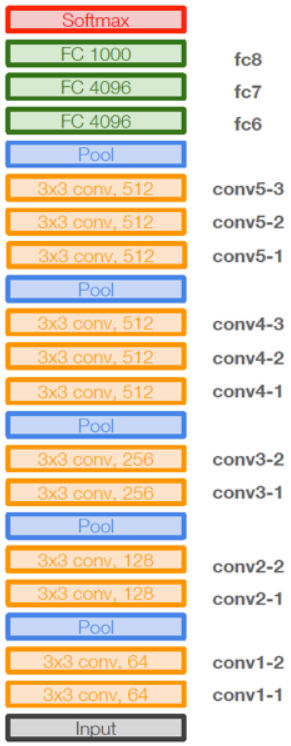

VGG16

Common names

ImageNet Large Scale Visual Recognition Challenge (ILSVRC) winners

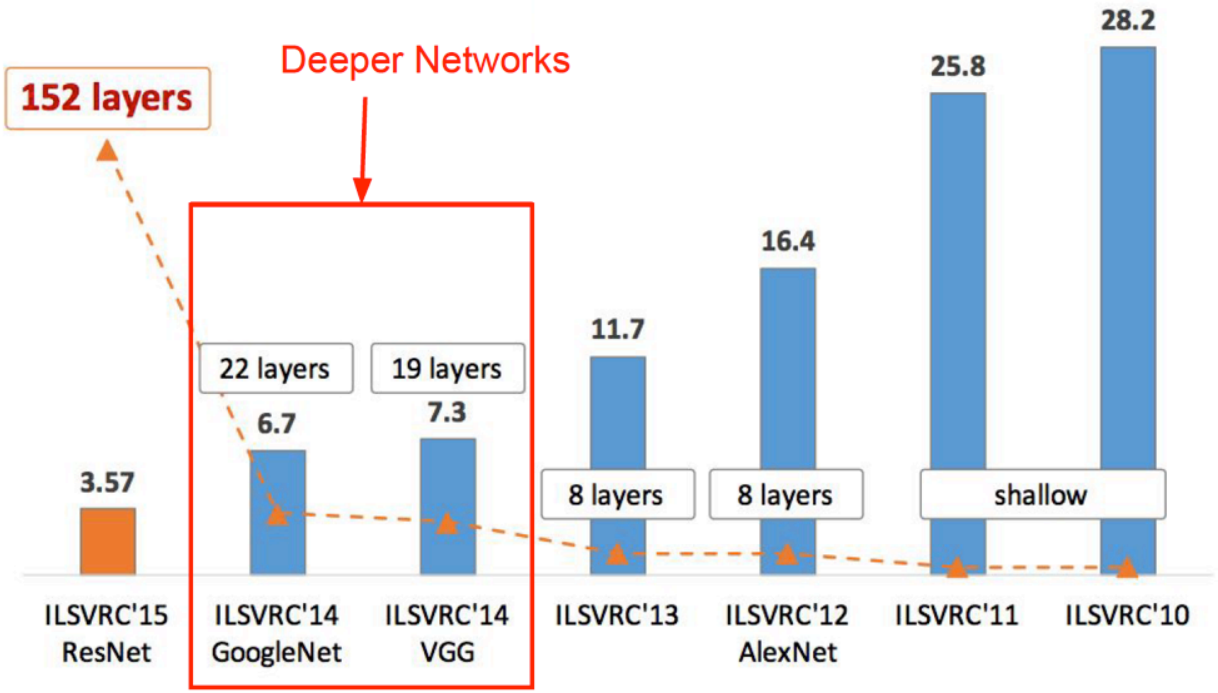

Figure copyright Kaiming He, 2016. Reproduced with permission.

Case Study: GoogLeNet

[Szegedy et al., 2014]

Deeper networks, with computational efficiency

- 22 layers
- Efficient “Inception” module
- No FC layers
- Only 5 million parameters!
  12x less than AlexNet
- ILSVRC’14 classification winner
  (6.7% top 5 error)

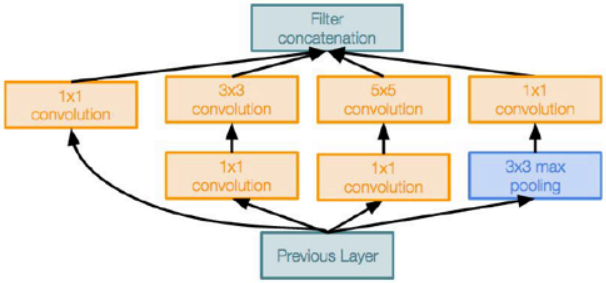

Inception module

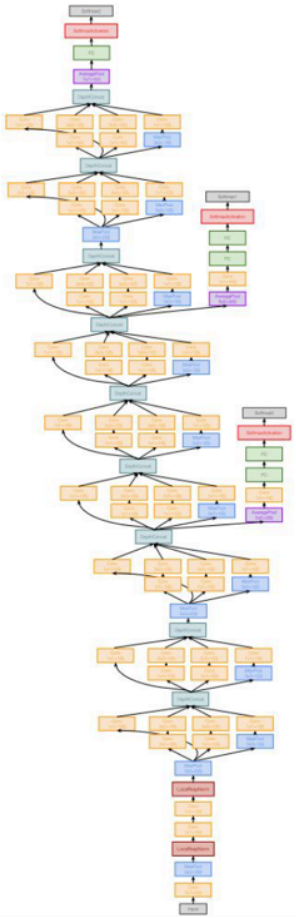

GoogLeNet

本文提出了一种深度卷积神经网络架构， 代号为Inception的结构，获得了ILSVRC14比赛的冠军，刷新了图像分类与检测的性能记录。该网络 的特点是提升了计算资源的利用率，可以在保持网络计算资源不变的前提下，通过工艺上的设计来增加网络的宽度和深度，在ILSVRC2014中提交的版本叫GoogLeNet，共有22层。

GoogLeNet用的参数比ILSVRC2012的冠军AlexNet少12倍，但准确率更高。现在的目标检测例如R-CNN，结合了深度架构和传统计算机视觉方法进行目标检测。

由于移动设备和嵌入式计算的发展，算法的效率很重要，一个好的算法，不仅要具有学术性，也要能用于实际中。

Case Study: GoogLeNet

[Szegedy et al., 2014]

"Inception module": design a good local network topology (network within a network) and then stack these modules on top of each other

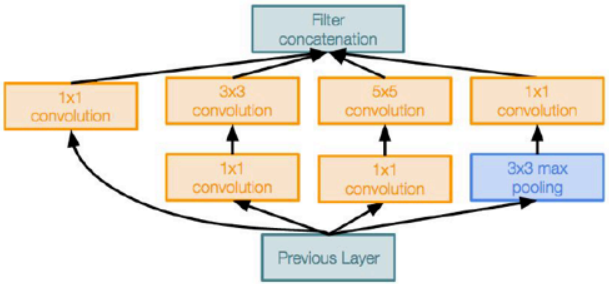

Inception module

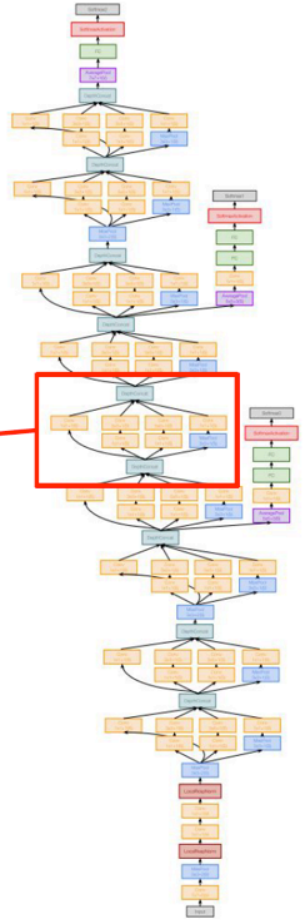

Case Study: GoogLeNet

[Szegedy et al., 2014]

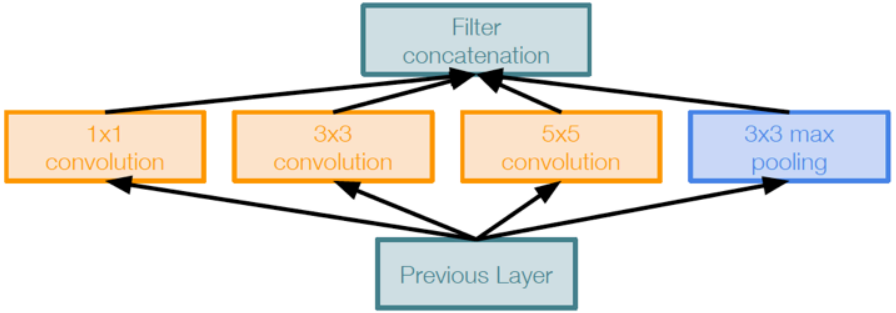

Naive Inception module

Apply parallel filter operations on the input from previous layer:

- Multiple receptive field sizes for convolution (1x1, 3x3, 5x5)
- Pooling operation (3x3)

Concatenate all filter outputs together depth-wise

Case Study: GoogLeNet

[Szegedy et al., 2014]

Example:

Q3:What is output size after filter concatenation?

28x28x(128+192+96+256) = 28x28x672

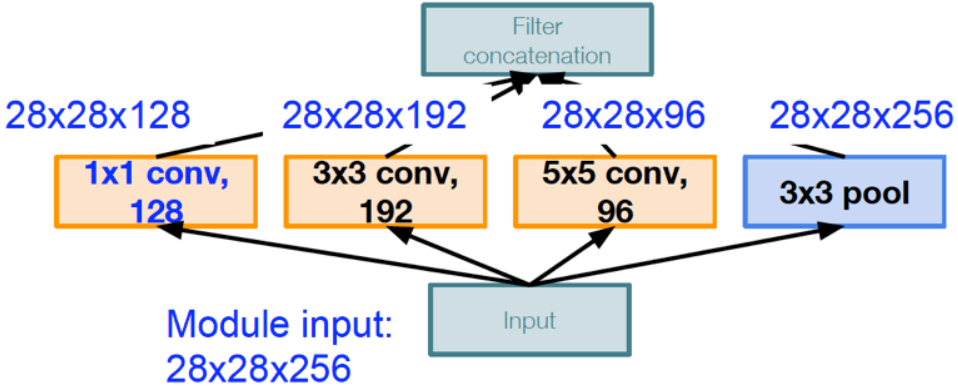

Naive Inception module

Q: What is the problem with this?
[Hint: Computational complexity]

Conv Ops:
[1x1 conv, 128] 28x28x128x1x1x256
[3x3 conv, 192] 28x28x192x3x3x256
[5x5 conv, 96] 28x28x96x5x5x256
Total: 854M ops

Very expensive compute

Pooling layer also preserves feature depth, which means total depth after concatenation can only grow at every layer!

Case Study: GoogLeNet

[Szegedy et al., 2014]

Q: What is the problem with this?
[Hint: Computational complexity]

Example:

Q3:What is output size after filter concatenation?

28x28x(128+192+96+256) = **529k**

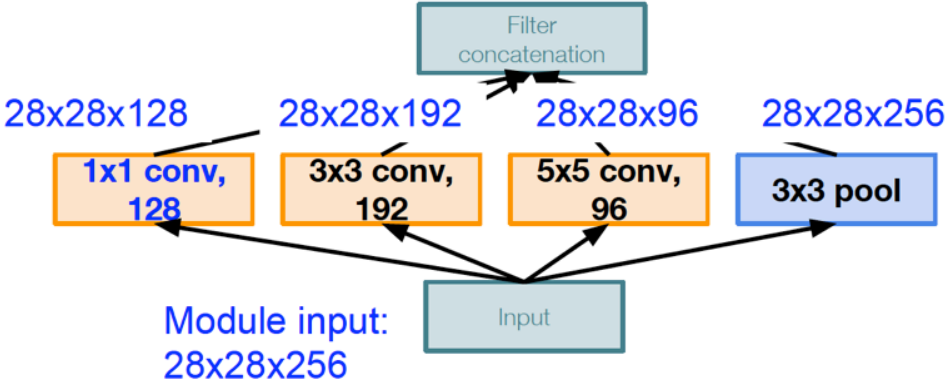

Naive Inception module

Solution: “bottleneck” layers that use 1x1 convolutions to reduce feature depth

GoogLeNet-Inception V1

直接提升深度卷积网络性能的方法是从深度与宽度两方面增加尺寸，但大尺寸的网络需要更多参数，容易导致过拟合，尤其是数据集不够大的时候，直接增加 尺寸的另一个弊端是需要大量计算资源。根本的解决办法是将全连接层变为稀疏链接层，而非均匀稀疏网络的弊端是计算效率不高，可以采用将多个稀疏矩阵合并成 相关的稠密子矩阵的方法来解决。

Inception模块之间互相堆放，它们的输出相关性统计一定会改变：高层次提取高抽象性的特征，空间集中性会降低，因此3x3和5x5的卷积核在更高层会比较多。

采用上面的模块有一个大问题是在卷积层顶端由于滤波器太多，即使是5x5的卷积都会让计算开销过分昂贵。当pooling单元加入之后这个问题更加明显： 输出滤波器的数量等于前一步中滤波器的数量。pooling层的输出和卷积层的输出融合会导致输出数量逐步增长。即使这个架构可能包含了最优的稀疏结构， 还是会非常没有效率，导致计算没经过几步就崩溃。

Reminder: 1x1 convolutions

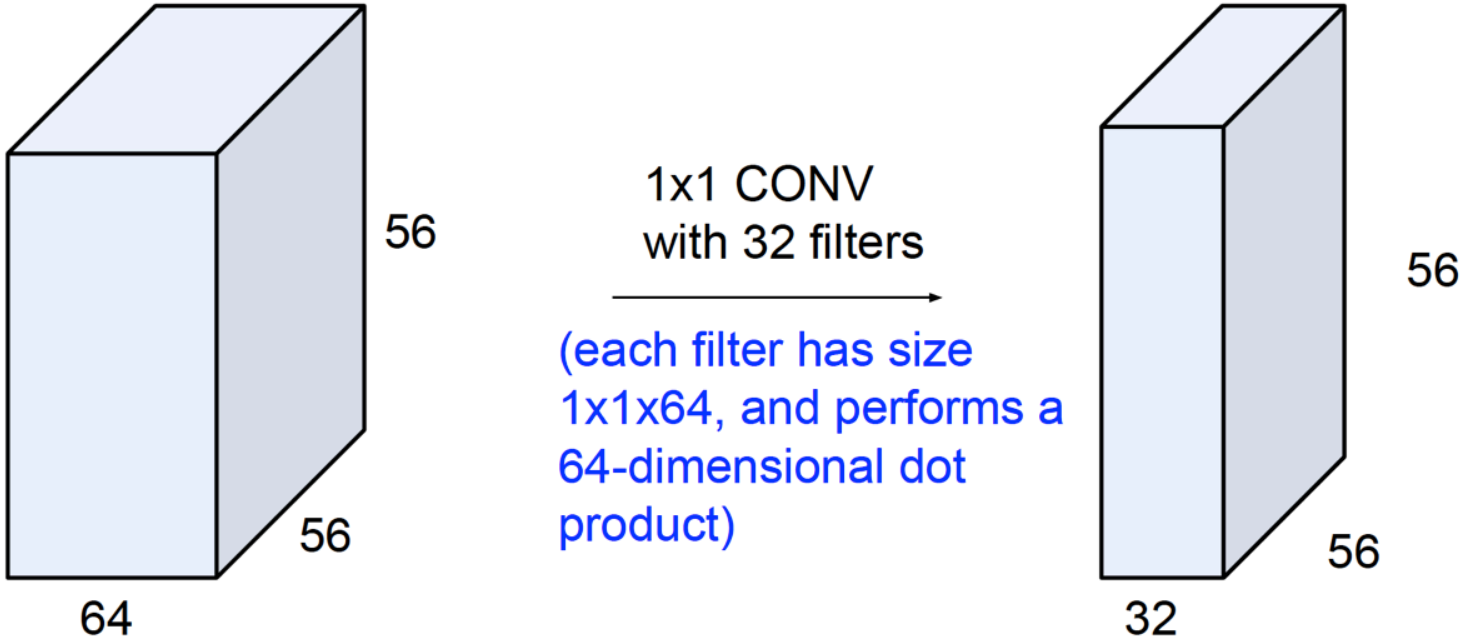

Reminder: 1x1 convolutions

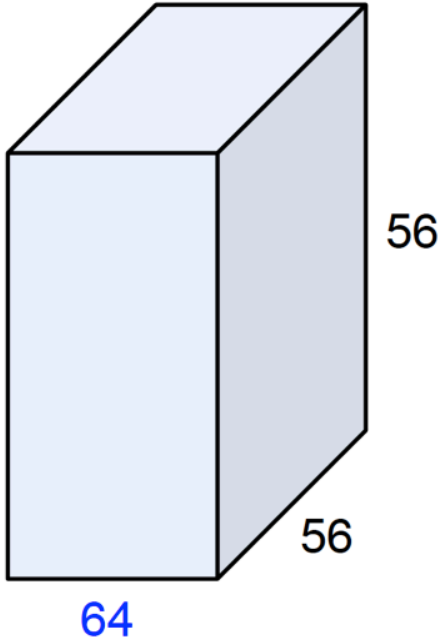

1x1 CONV
with 32 filters

preserves spatial dimensions, reduces depth!

Projects depth to lower dimension (combination of feature maps)

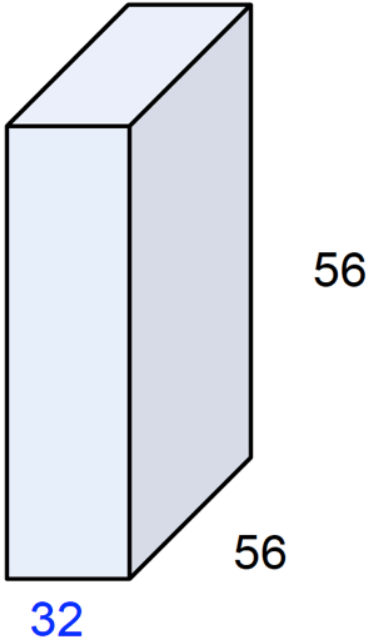

Case Study: GoogLeNet

[Szegedy et al., 2014]

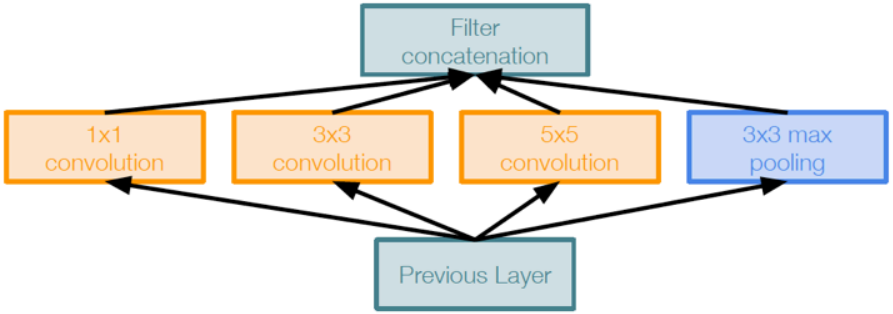

Naive Inception module

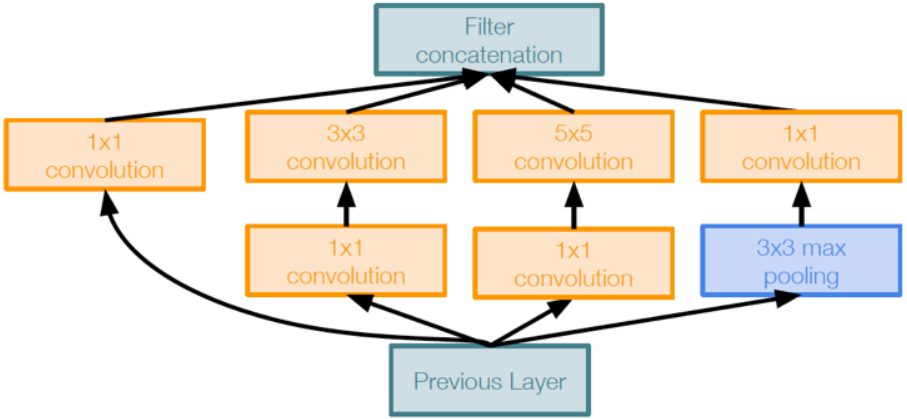

Inception module with dimension reduction

Case Study: GoogLeNet

[Szegedy et al., 2014]

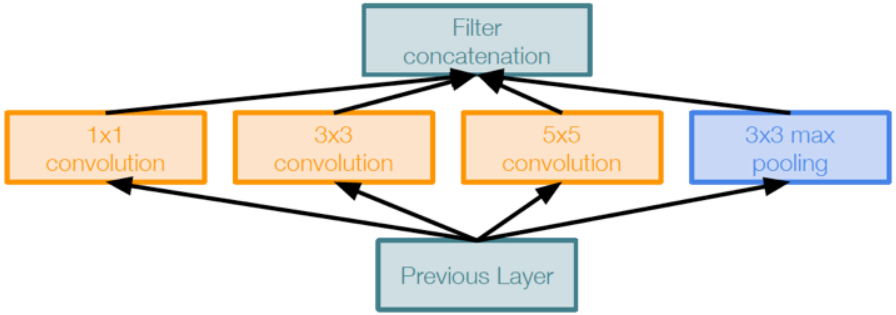

Naive Inception module

1x1 conv "bottleneck" layers

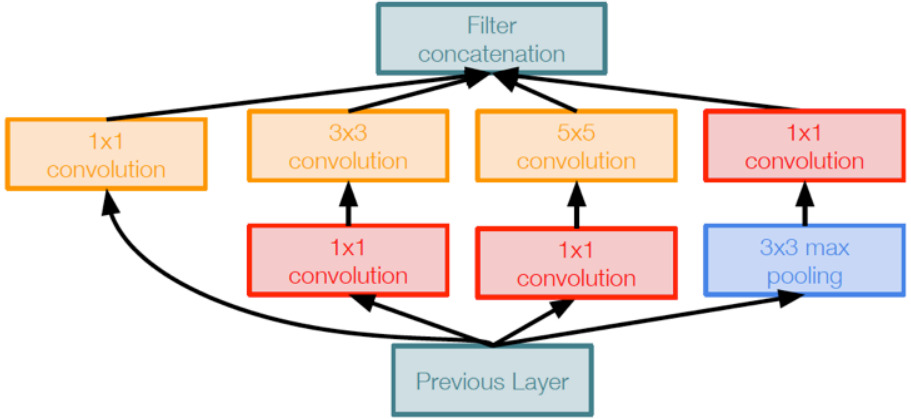

Inception module with dimension reduction

Case Study: GoogLeNet

[Szegedy et al., 2014]

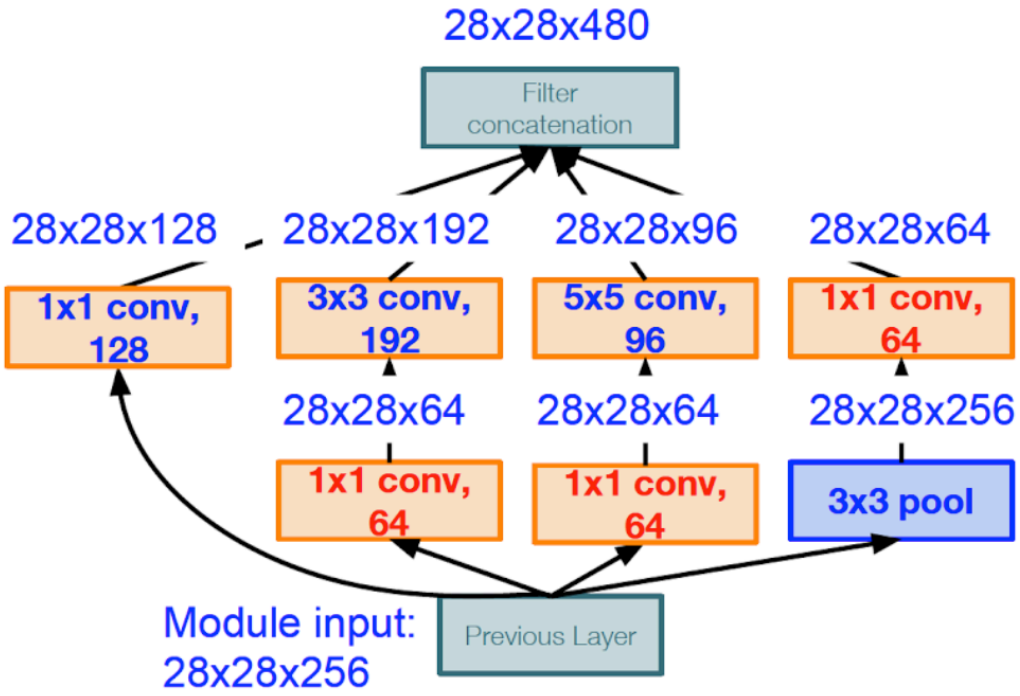

Inception module with dimension reduction

计算量是多少?

Case Study: GoogLeNet

[Szegedy et al., 2014]

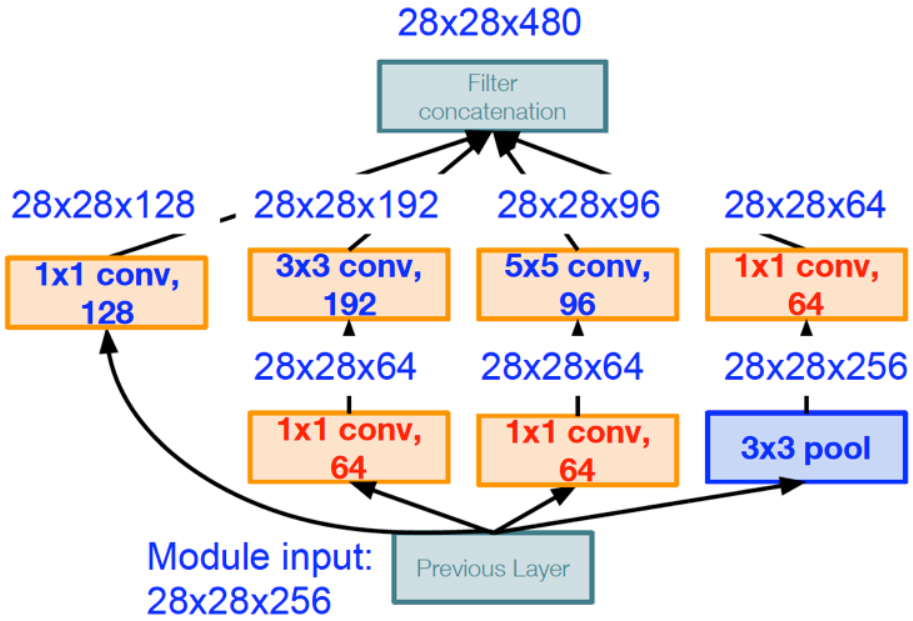

Inception module with dimension reduction

Using same parallel layers as naive example, and adding "1x1 conv, 64 filter" bottlenecks:

Conv Ops:

[1x1 conv, 64] 28x28x64x1x1x256
[1x1 conv, 64] 28x28x64x1x1x256
[1x1 conv, 128] 28x28x128x1x1x256
[3x3 conv, 192] 28x28x192x3x3x64
[5x5 conv, 96] 28x28x96x5x5x64
[1x1 conv, 64] 28x28x64x1x1x256
Total: 358M ops

Compared to 854M ops for naive version
Bottleneck can also reduce depth after pooling layer

Case Study: GoogLeNet

[Szegedy et al., 2014]

Stack Inception modules with dimension reduction on top of each other

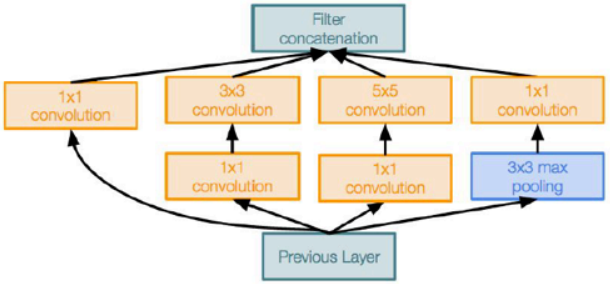

Inception module

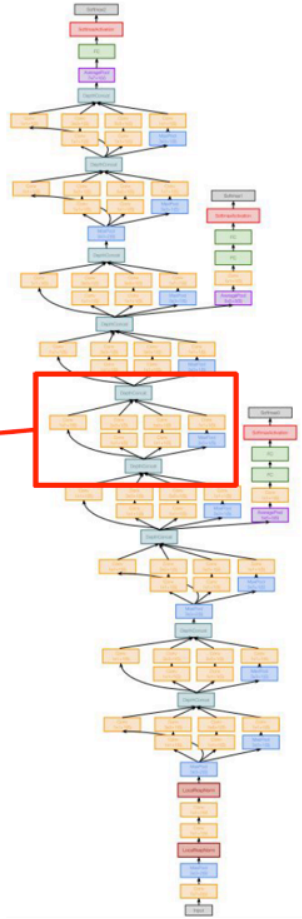

Case Study: GoogLeNet

[Szegedy et al., 2014]

Full GoogLeNet architecture

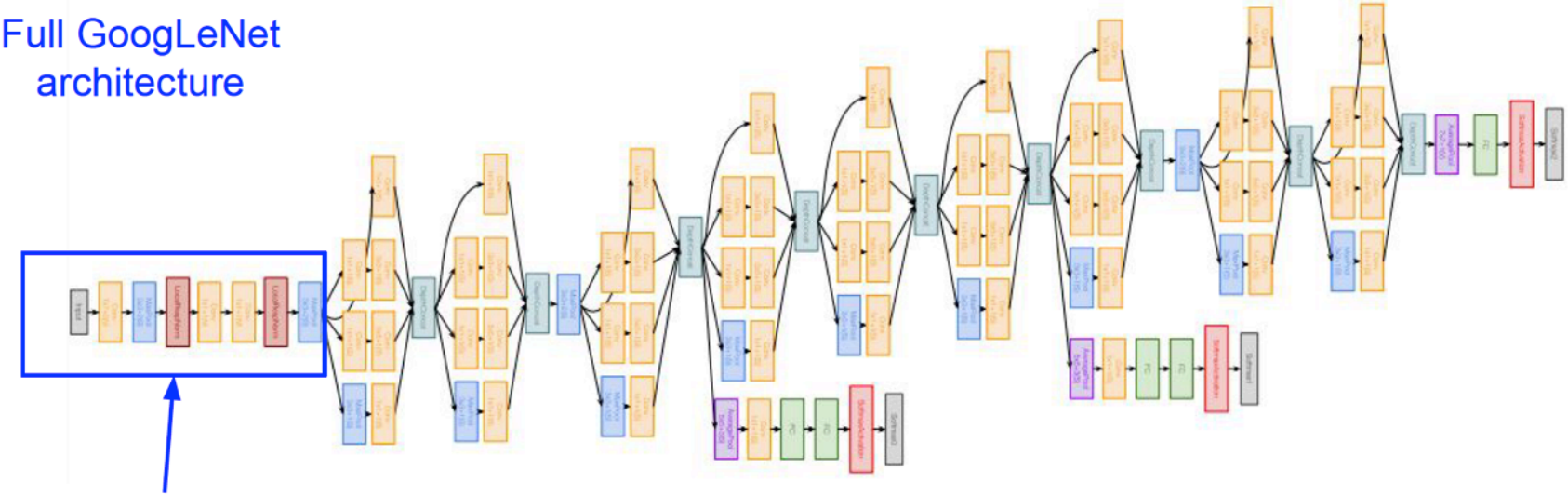

Stem Network: Conv-Pool- 2x Conv-Pool

Case Study: GoogLeNet

[Szegedy et al., 2014]

Full GoogLeNet architecture

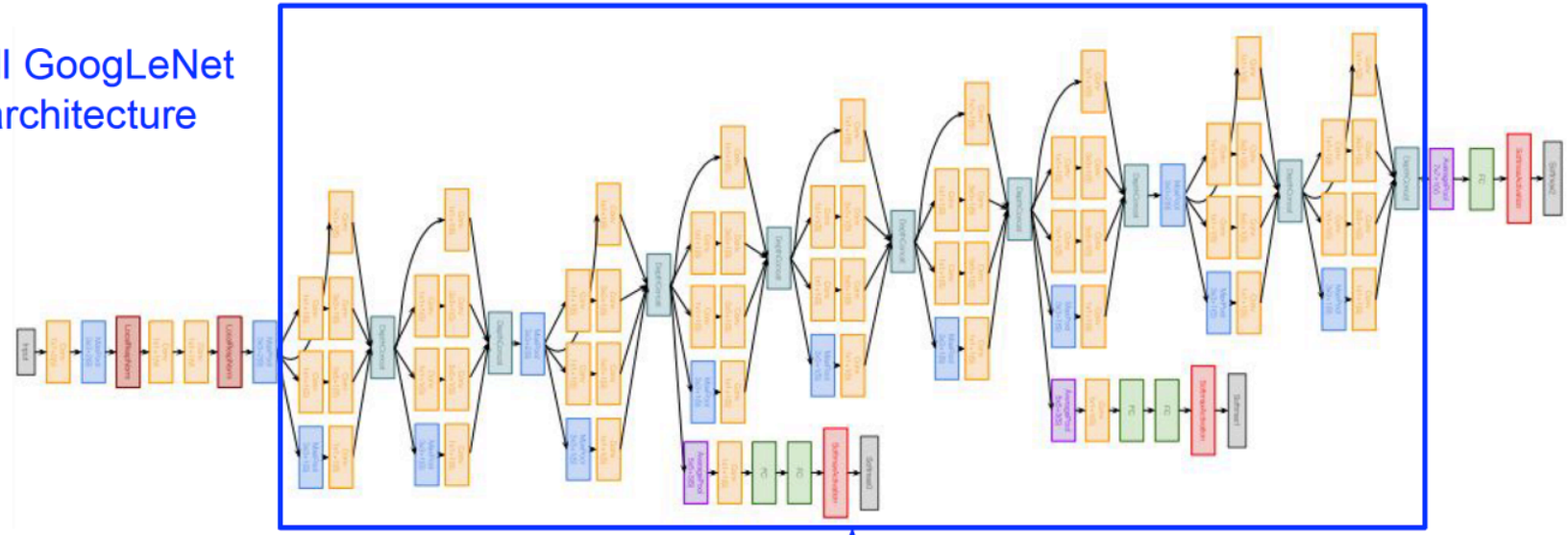

Stacked Inception Modules

Case Study: GoogLeNet

[Szegedy et al., 2014]

Full GoogLeNet architecture

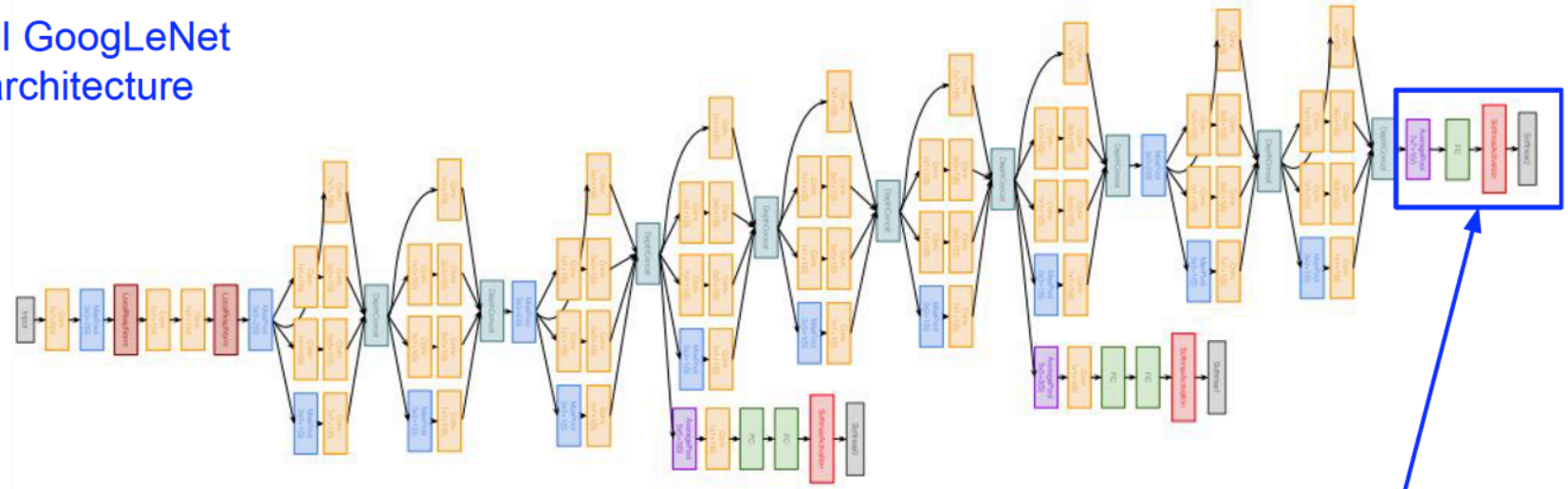

Classifier output

Case Study: GoogLeNet

[Szegedy et al., 2014]

Full GoogLeNet architecture

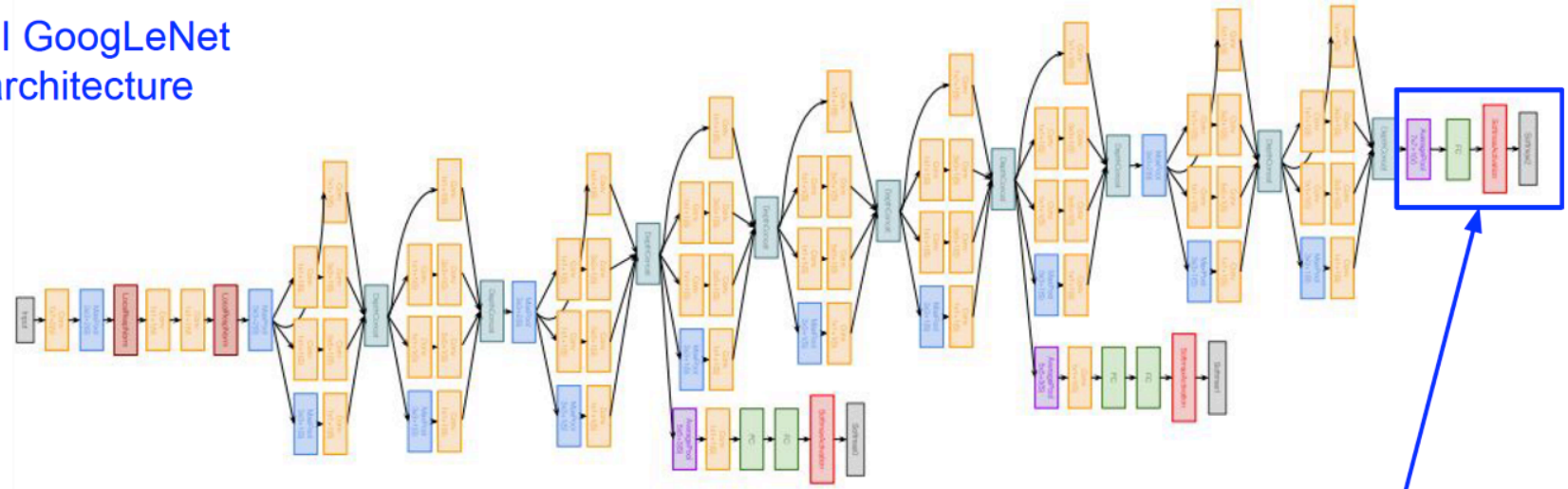

Classifier output
(removed expensive FC layers!)

Case Study: GoogLeNet

[Szegedy et al., 2014]

Full GoogLeNet architecture

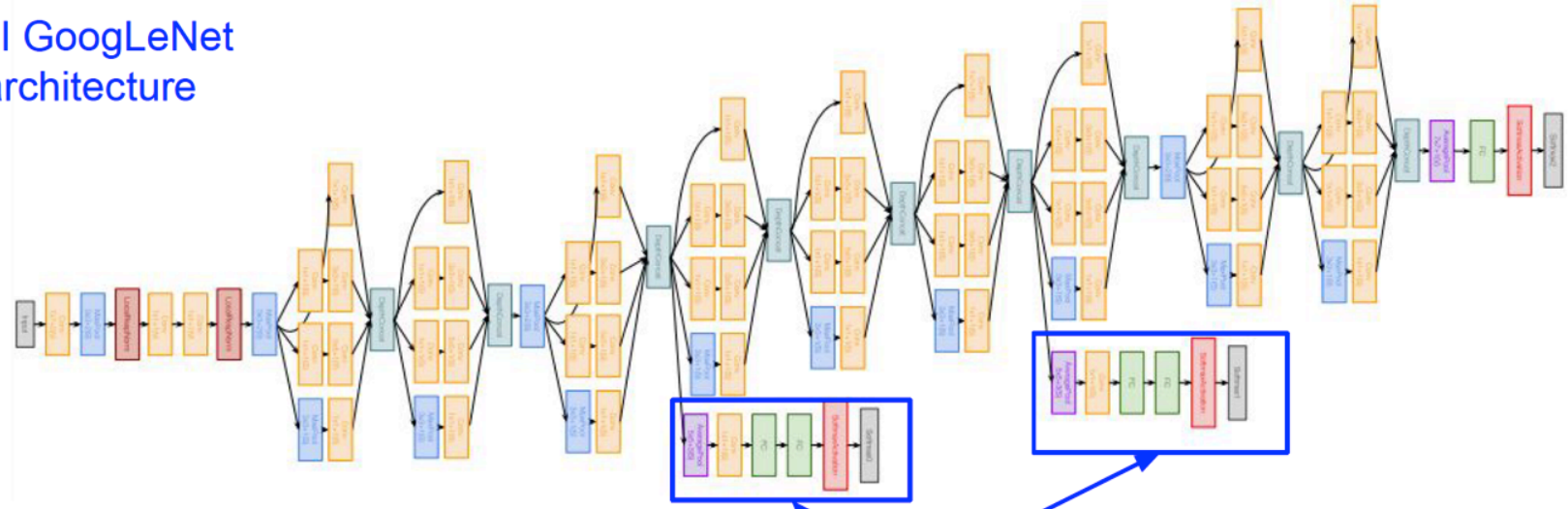

Auxiliary classification outputs to inject additional gradient at lower layers (AvgPool-1x1Conv-FC-FC-Softmax)

Case Study: GoogLeNet

[Szegedy et al., 2014]

Full GoogLeNet architecture

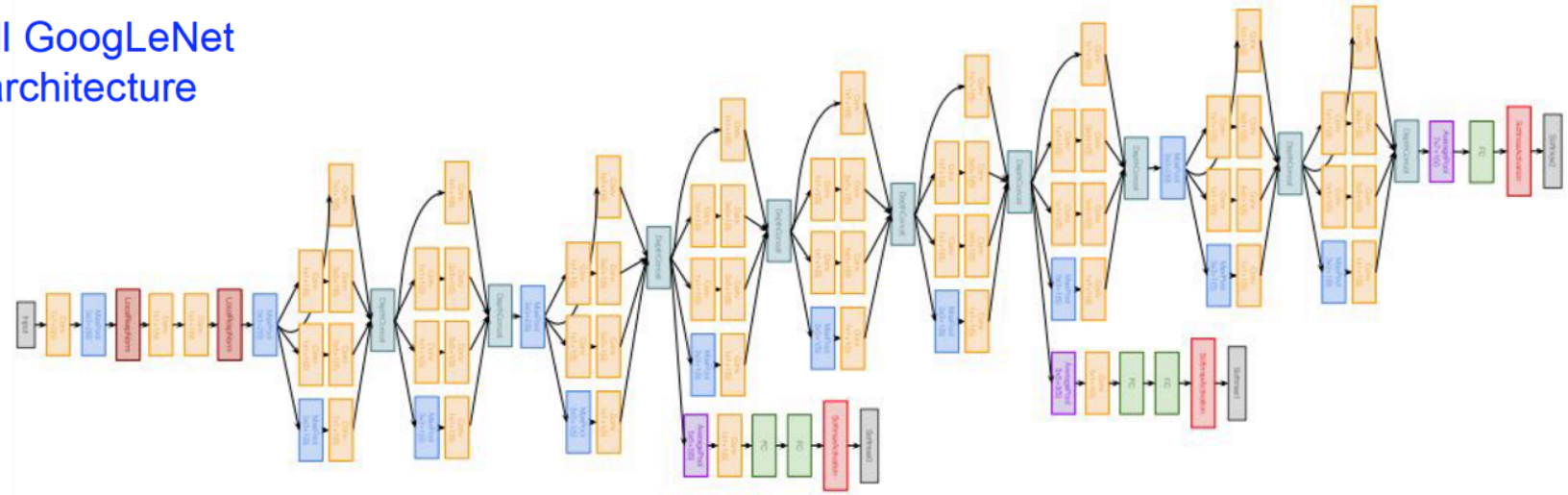

22 total layers with weights (including each parallel layer in an Inception module)

Case Study: GoogLeNet

[Szegedy et al., 2014]

Deeper networks, with computational efficiency

- 22 layers
- Efficient “Inception” module
- No FC layers
- 12x less params than AlexNet
- ILSVRC’14 classification winner (6.7% top 5 error)

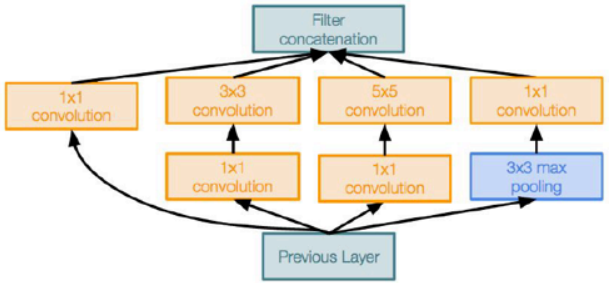

Inception module

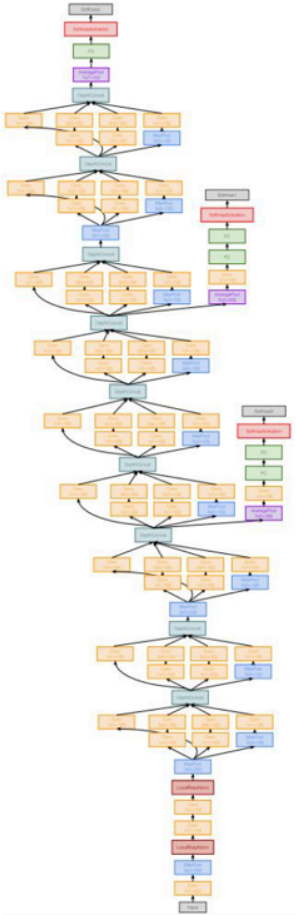

GoogLeNet的参数和运算量指标

type	patch size/ stride	output size	depth	#1×1	#3×3 reduce	#3×3	#5×5 reduce	#5×5	pool proj	params	ops
convolution	7×7/2	112×112×64	1							2.7K	34M
max pool	3×3/2	56×56×64	0								
convolution	3×3/1	56×56×192	2		64	192				112K	360M
max pool	3×3/2	28×28×192	0								
inception (3a)		28×28×256	2	64	96	128	16	32	32	159K	128M
inception (3b)		28×28×480	2	128	128	192	32	96	64	380K	304M
max pool	3×3/2	14×14×480	0								
inception (4a)		14×14×512	2	192	96	208	16	48	64	364K	73M
inception (4b)		14×14×512	2	160	112	224	24	64	64	437K	88M
inception (4c)		14×14×512	2	128	128	256	24	64	64	463K	100M
inception (4d)		14×14×528	2	112	144	288	32	64	64	580K	119M
inception (4e)		14×14×832	2	256	160	320	32	128	128	840K	170M
max pool	3×3/2	7×7×832	0								
inception (5a)		7×7×832	2	256	160	320	32	128	128	1072K	54M
inception (5b)		7×7×1024	2	384	192	384	48	128	128	1388K	71M
avg pool	7×7/1	1×1×1024	0								
dropout (40%)		1×1×1024	0								
linear		1×1×1000	1							1000K	1M
softmax		1×1×1000	0								

GoogLeNet

总体结构：

1.包括Inception模块的所有卷积，都用了修正线性单元（ReLU）

2.网络的感受野大小是224x224，采用RGB彩色通道，且减去均值；

3.#3x3 reduce和#5x5 reduce分别表示3x3和5x5的卷积前缩减层中1x1滤波器的个数；pool proj表示嵌入的max-pooling之后的投影层中1x1滤波器的个数；缩减层和投影层都要用ReLU；

4.网络包含22个带参数的层（如果考虑pooling层就是27层），独立成块的层总共有约有100个；

5.网络中间的层次生成的特征会非常有区分性，给这些层增加一些辅助分类器。这些分类器以小卷积网络的形式放在Inception(4a)和Inception(4b)的输出上。在训练过程中，损失会根据折扣后的权重（折扣权重为0.3）叠加到总损失中。

6.利用分布式机器学习系统和数据并行来训练网络，虽然实现时只用了CPU，但是是可以用个别高端的GPU一周达到收敛的。采用异步随机梯度下降，动量为0.9，学习率每8个epoch下降4%。用Polyak平均来创建最后的模型。 图像采样的patch大小从图像的8%到100%，选取的长宽比在3/4到4/3之间，光度扭曲也有利于减少过拟合，还使用随机插值方法结合其他超参数的改变来调整图像大小。

ILSVRC的训练技巧-GoogLeNet

ILSVRC 2014的分类任务有1000个子类，120万训练图像，5万验证图像，10万测试图像，每个图像中有一个ground truth，性能测量是基于得分最高的分类器预测，常用指标为top-1准确率和top-5错误率。

测试时的一些小技巧：

1.训练了7个网络，初始化和权重都相同，只是采样方法和随机输入图像不同；

2.将图像的短边分别缩放成256、288、320、352这样4种尺度。取图像的左中右块（或上中下块）。每块取四个角和中间的224x224的裁剪， 和将这个块缩放到224x224，以及它们的镜像。这样每个图像有4x3x6x2=144个，但可能实际中不需要这么多；

3.softmax概率在多个裁剪和在所有分类器上取平均来获得最后的预测，简单的平均结果最好。

最终的top-5错误率在验证集和测试集上都是6.67%，获得了第一。与其他方法相比的提高如下所示：

Team	Year	Place	Error (top-5)	Uses external data
SuperVision	2012	1st	16.4%	no
SuperVision	2012	1st	15.3%	Imagenet 22k
Clarifai	2013	1st	11.7%	no
Clarifai	2013	1st	11.2%	Imagenet 22k
MSRA	2014	3rd	7.35%	no
VGG	2014	2nd	7.32%	no
GoogLeNet	2014	1st	6.67%	no

Number of models	Number of Crops	Cost	Top-5 error	compared to base
1	1	1	10.07%	base
1	10	10	9.15%	-0.92%
1	144	144	7.89%	-2.18%
7	1	7	8.09%	-1.98%
7	10	70	7.62%	-2.45%
7	144	1008	6.67%	-3.45%

ImageNet Large Scale Visual Recognition Challenge (ILSVRC) winners

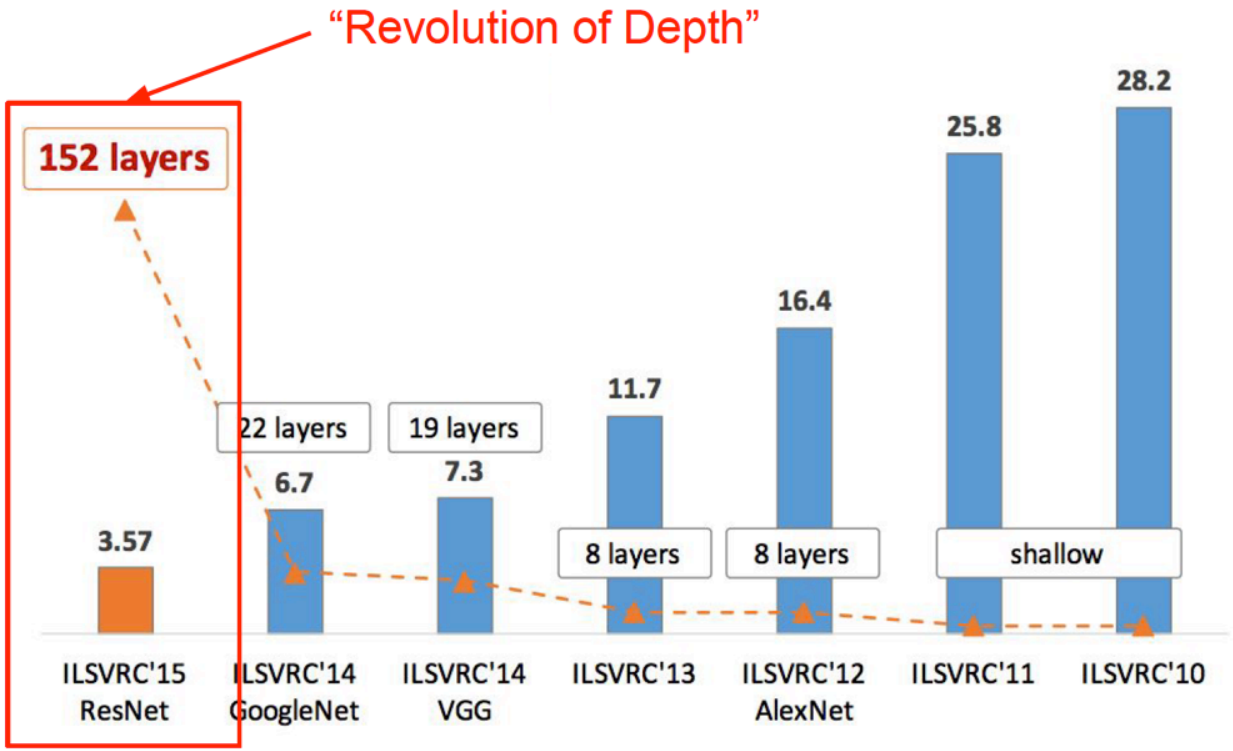

Figure copyright Kaiming He, 2016. Reproduced with permission.

Case Study: ResNet

[He et al., 2015]

Very deep networks using residual connections

- 152-layer model for ImageNet
- ILSVRC'15 classification winner (3.57% top 5 error)
- Swept all classification and detection competitions in ILSVRC'15 and COCO'15!

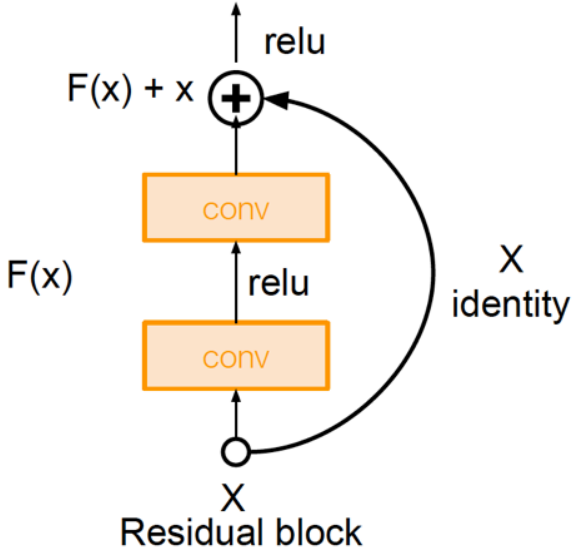

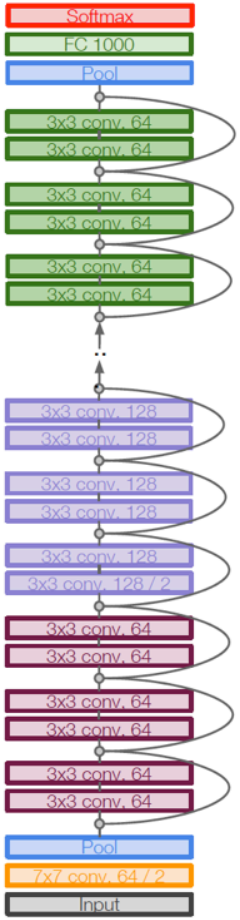

ResNets @ ILSVRC & COCO 2015 Competitions

- **1st places in all five main tracks**
  - ImageNet Classification: "*Ultra-deep*" 152-layer nets
  - ImageNet Detection: 16% better than 2nd
  - ImageNet Localization: 27% better than 2nd
  - COCO Detection: 11% better than 2nd
  - COCO Segmentation: 12% better than 2nd

深度网络退化问题

从经验来看，网络的深度对模型的性能至关重要，当增加网络层数后，网络可以进行更加复杂的特征模式的提取，所以当模型更深时理论上可以取得更好的结果，从图2中也可以看出网络越深而效果越好的一个实践证据。

但是更深的网络其性能一定会更好吗？

Case Study: ResNet

[He et al., 2015]

What happens when we continue stacking deeper layers on a “plain” convolutional neural network?

Q: What’s strange about these training and test curves?
[Hint: look at the order of the curves]

Case Study: ResNet

[He et al., 2015]

What happens when we continue stacking deeper layers on a “plain” convolutional neural network?

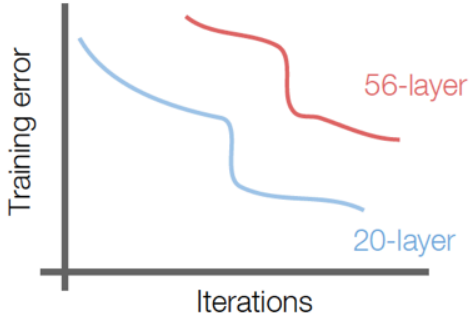

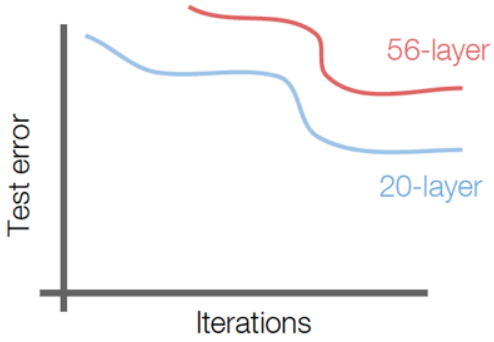

56-layer model performs worse on both training and test error
-> The deeper model performs worse, but it’s not caused by overfitting!

实验发现深度网络出现了退化问题（Degradation problem）：网络深度增加时，网络准确度出现饱和，甚至出现下降。这个现象可以在图中直观看出来：56层的网络比20层网络效果还要差。这不会是过拟合问题，因为56层网络的训练误差同样高。我们知道深层网络存在着梯度消失或者爆炸的问题，这使得深度学习模型很难训练。

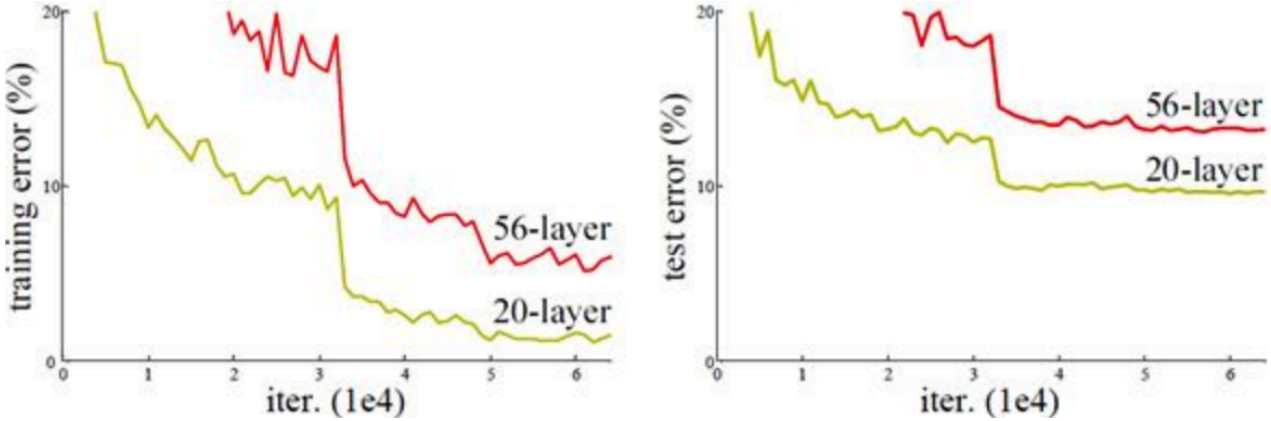

Case Study: ResNet

[He et al., 2015]

Hypothesis: the problem is an *optimization* problem, deeper models are harder to optimize

The deeper model should be able to perform at least as well as the shallower model.

A solution by construction is copying the learned layers from the shallower model and setting additional layers to identity mapping.

Case Study: ResNet

[He et al., 2015]

Solution: Use network layers to fit a residual mapping instead of directly trying to fit a desired underlying mapping

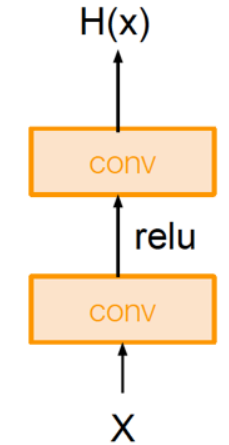

"Plain" layers

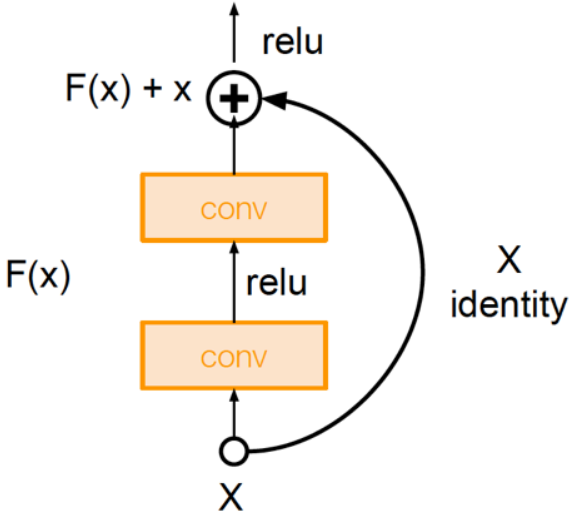

Residual block

Case Study: ResNet

[He et al., 2015]

Solution: Use network layers to fit a residual mapping instead of directly trying to fit a desired underlying mapping

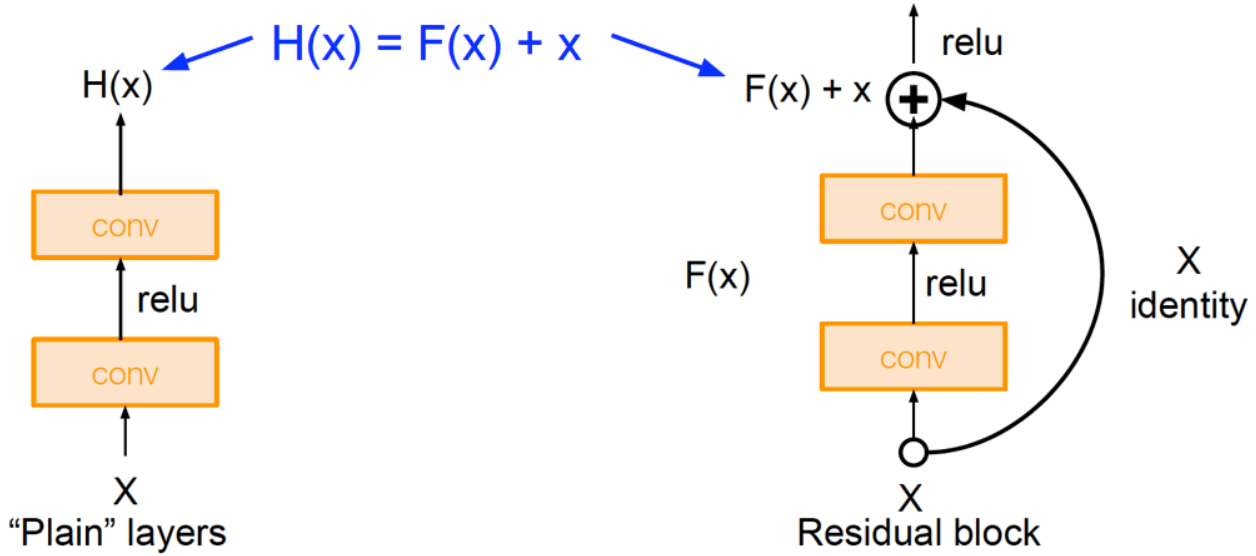

Use layers to fit residual F(x) = H(x) - x instead of H(x) directly

为什么残差容易训练?

$$y_l = h(x_l) + F(x_l, W_l)$$

$$x_{l+1} = f(y_l)$$

$$h(x_l) = x_l$$

$$x_L = x_l + \sum_{i=l}^{L-1} F(x_i, W_i)$$

F是残差函数

h是恒等变换

xL是融合后的输出

f是激活函数

为什么残差容易训练?

$$\frac{\partial loss}{\partial x_l} = \frac{\partial loss}{\partial x_L} \cdot \frac{\partial x_L}{\partial x_l} = \frac{\partial loss}{\partial x_L} \cdot \left(1 + \frac{\partial}{\partial x_L} \sum_{i=l}^{L-1} F(x_i, W_i)\right)$$

Case Study: ResNet

[He et al., 2015]

Full ResNet architecture:

- Stack residual blocks
- Every residual block has two 3x3 conv layers

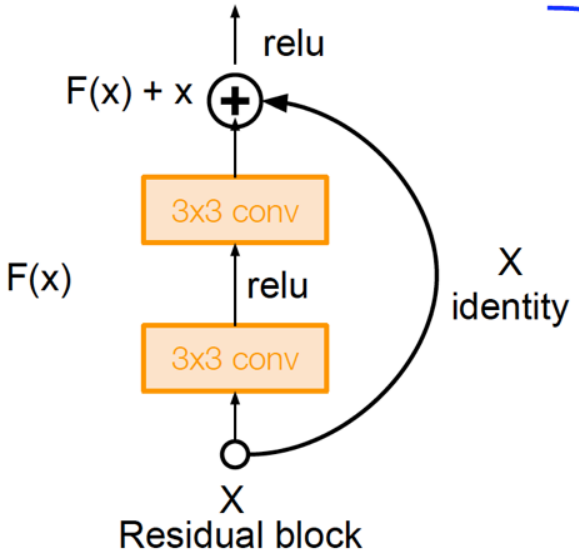

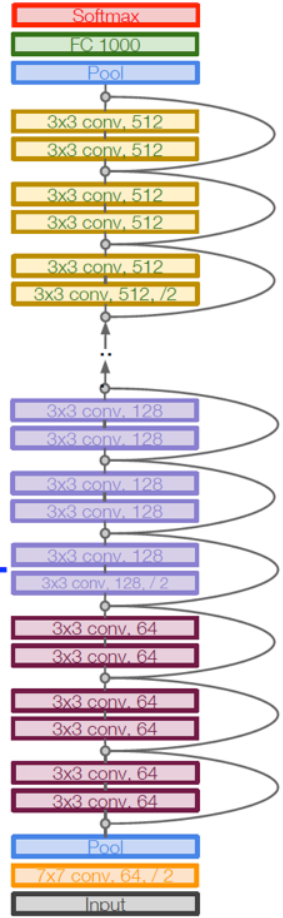

Case Study: ResNet

[He et al., 2015]

Full ResNet architecture:

- Stack residual blocks
- Every residual block has two 3x3 conv layers
- Periodically, double # of filters and downsample spatially using stride 2 (/2 in each dimension)

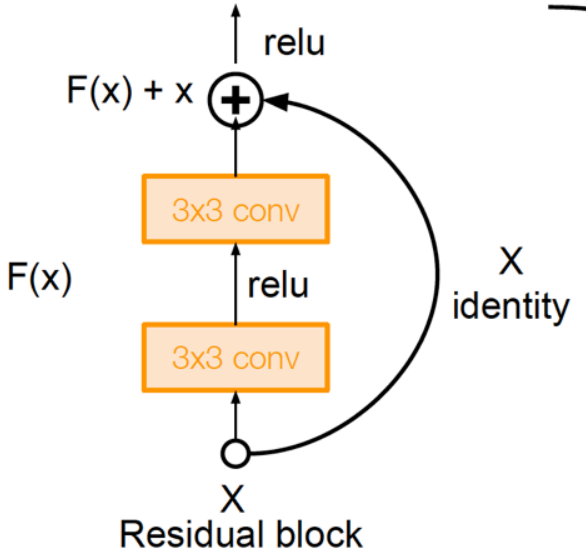

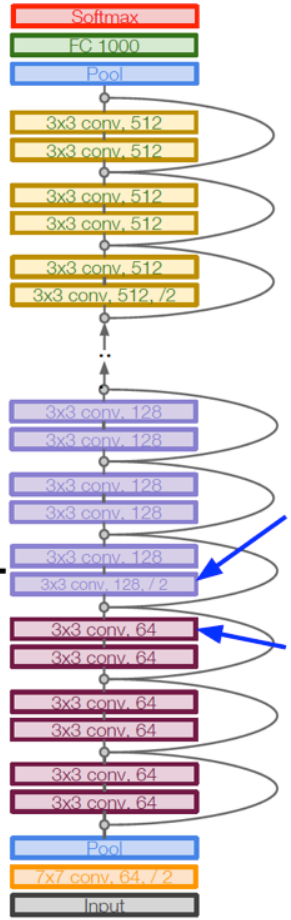

Case Study: ResNet

[He et al., 2015]

Full ResNet architecture:

- Stack residual blocks
- Every residual block has two 3x3 conv layers
- Periodically, double # of filters and downsample spatially using stride 2 (/2 in each dimension)
- Additional conv layer at the beginning

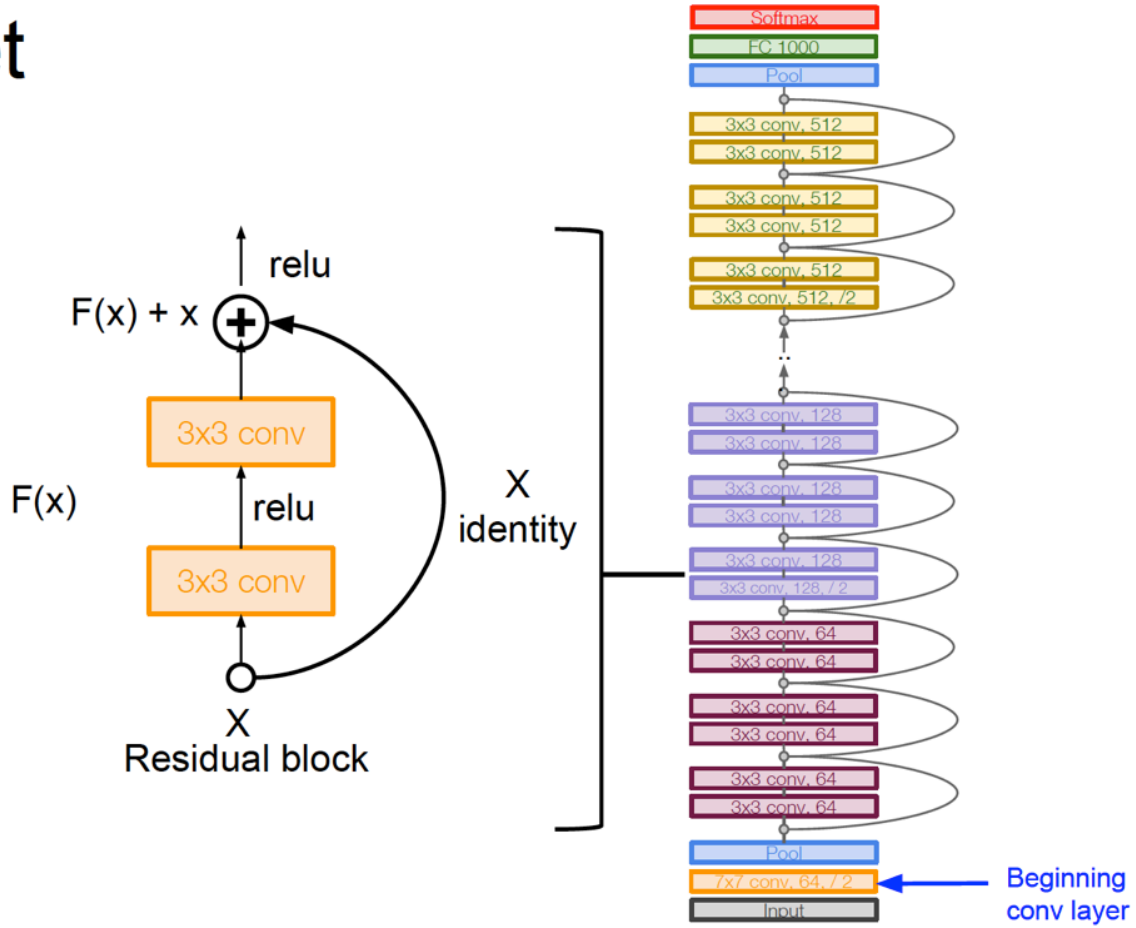

Case Study: ResNet

[He et al., 2015]

Full ResNet architecture:

- Stack residual blocks
- Every residual block has two 3x3 conv layers
- Periodically, double # of filters and downsample spatially using stride 2 (/2 in each dimension)
- Additional conv layer at the beginning
- No FC layers at the end (only FC 1000 to output classes)

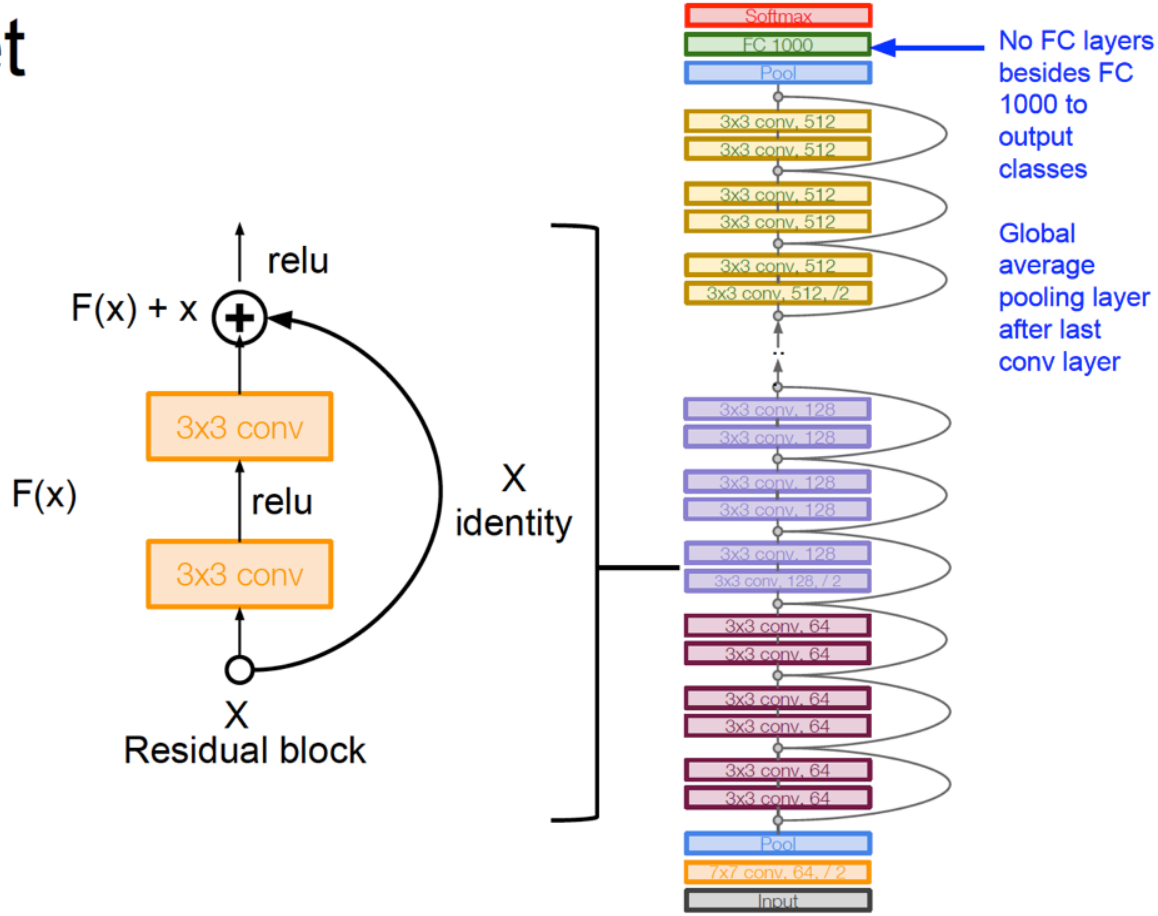

Case Study: ResNet

[He et al., 2015]

Total depths of 34, 50, 101, or 152 layers for ImageNet

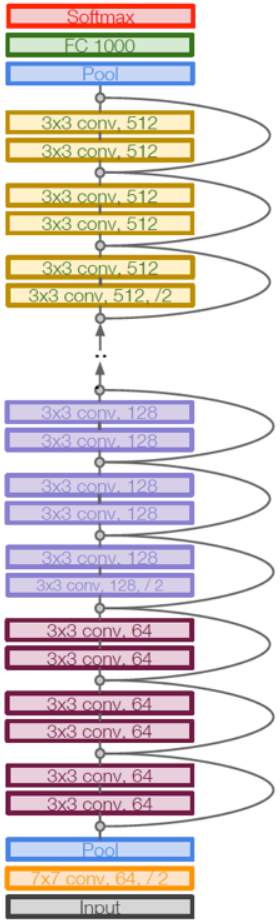

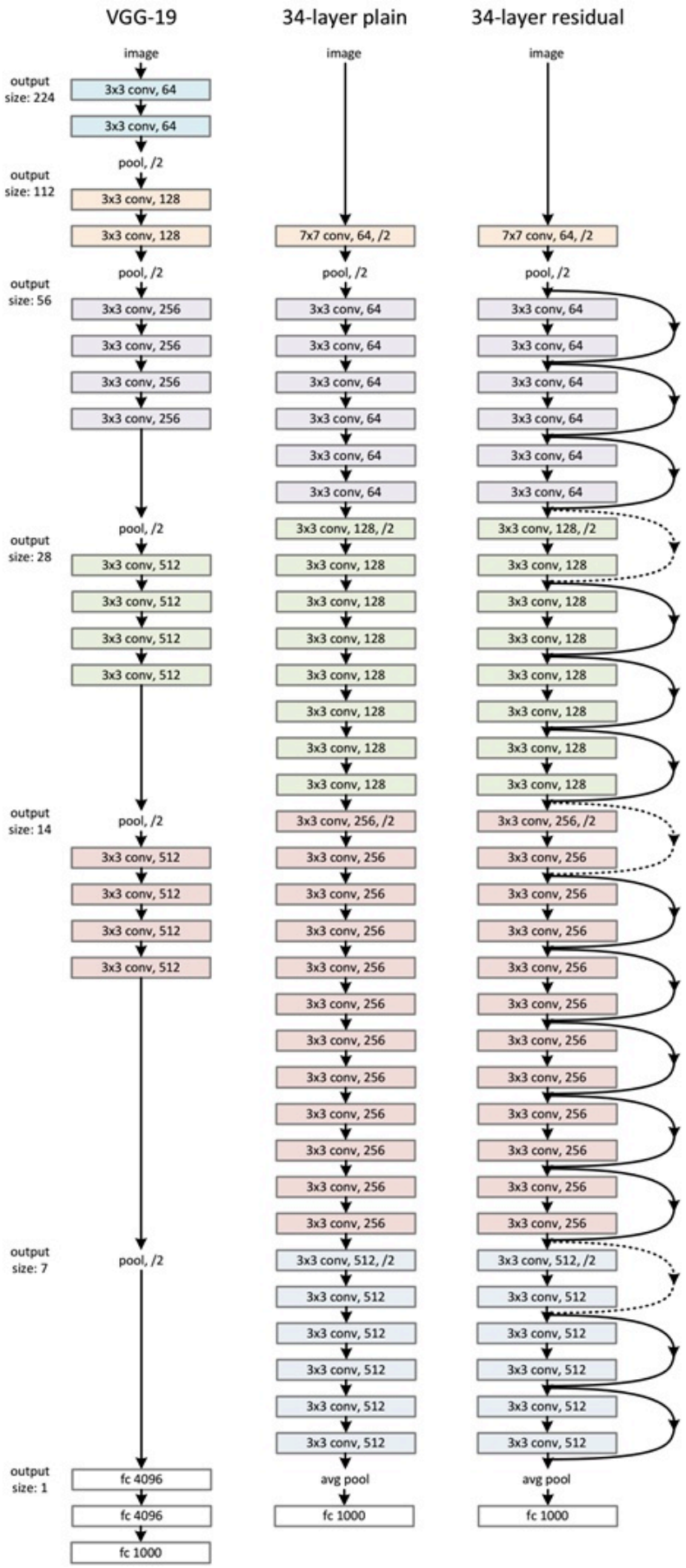
VGG-19
34-layer plain
34-layer residual
image
output size: 224
3x3 conv, 64
3x3 conv, 64
pool, /2
output size: 112
3x3 conv, 128
3x3 conv, 128
pool, /2
output size: 56
3x3 conv, 256
3x3 conv, 256
3x3 conv, 256
3x3 conv, 256
pool, /2
output size: 28
3x3 conv, 512
3x3 conv, 512
3x3 conv, 512
3x3 conv, 512
pool, /2
output size: 14
3x3 conv, 512
3x3 conv, 512
3x3 conv, 512
3x3 conv, 512
pool, /2
output size: 7
fc 4096
fc 4096
fc 1000
output size: 1
7x7 conv, 64, /2
pool, /2
3x3 conv, 64
3x3 conv, 128, /2
3x3 conv, 128
3x3 conv, 256, /2
3x3 conv, 256
3x3 conv, 512, /2
3x3 conv, 512
avg pool
fc 1000

FLOPS

layer name	output size	18-layer	34-layer	50-layer	101-layer	152-layer
conv1	112×112	7×7, 64, stride 2				
conv2_x	56×56	3×3 max pool, stride 2				
		$\begin{bmatrix} 3\times3, 64 \\ 3\times3, 64 \end{bmatrix}\times2$	$\begin{bmatrix} 3\times3, 64 \\ 3\times3, 64 \end{bmatrix}\times3$	$\begin{bmatrix} 1\times1, 64 \\ 3\times3, 64 \\ 1\times1, 256 \end{bmatrix}\times3$	$\begin{bmatrix} 1\times1, 64 \\ 3\times3, 64 \\ 1\times1, 256 \end{bmatrix}\times3$	$\begin{bmatrix} 1\times1, 64 \\ 3\times3, 64 \\ 1\times1, 256 \end{bmatrix}\times3$
conv3_x	28×28	$\begin{bmatrix} 3\times3, 128 \\ 3\times3, 128 \end{bmatrix}\times2$	$\begin{bmatrix} 3\times3, 128 \\ 3\times3, 128 \end{bmatrix}\times4$	$\begin{bmatrix} 1\times1, 128 \\ 3\times3, 128 \\ 1\times1, 512 \end{bmatrix}\times4$	$\begin{bmatrix} 1\times1, 128 \\ 3\times3, 128 \\ 1\times1, 512 \end{bmatrix}\times4$	$\begin{bmatrix} 1\times1, 128 \\ 3\times3, 128 \\ 1\times1, 512 \end{bmatrix}\times8$
conv4_x	14×14	$\begin{bmatrix} 3\times3, 256 \\ 3\times3, 256 \end{bmatrix}\times2$	$\begin{bmatrix} 3\times3, 256 \\ 3\times3, 256 \end{bmatrix}\times6$	$\begin{bmatrix} 1\times1, 256 \\ 3\times3, 256 \\ 1\times1, 1024 \end{bmatrix}\times6$	$\begin{bmatrix} 1\times1, 256 \\ 3\times3, 256 \\ 1\times1, 1024 \end{bmatrix}\times23$	$\begin{bmatrix} 1\times1, 256 \\ 3\times3, 256 \\ 1\times1, 1024 \end{bmatrix}\times36$
conv5_x	7×7	$\begin{bmatrix} 3\times3, 512 \\ 3\times3, 512 \end{bmatrix}\times2$	$\begin{bmatrix} 3\times3, 512 \\ 3\times3, 512 \end{bmatrix}\times3$	$\begin{bmatrix} 1\times1, 512 \\ 3\times3, 512 \\ 1\times1, 2048 \end{bmatrix}\times3$	$\begin{bmatrix} 1\times1, 512 \\ 3\times3, 512 \\ 1\times1, 2048 \end{bmatrix}\times3$	$\begin{bmatrix} 1\times1, 512 \\ 3\times3, 512 \\ 1\times1, 2048 \end{bmatrix}\times3$
	1×1	average pool, 1000-d fc, softmax				
FLOPs		1.8×10^9	3.6×10^9	3.8×10^9	7.6×10^9	11.3×10^9

Case Study: ResNet

[He et al., 2015]

For deeper networks (ResNet-50+), use “bottleneck” layer to improve efficiency (similar to GoogLeNet)

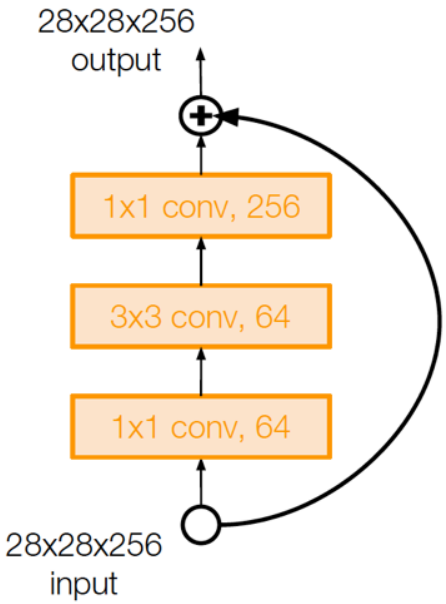

Case Study: ResNet

[He et al., 2015]

For deeper networks (ResNet-50+), use “bottleneck” layer to improve efficiency (similar to GoogLeNet)

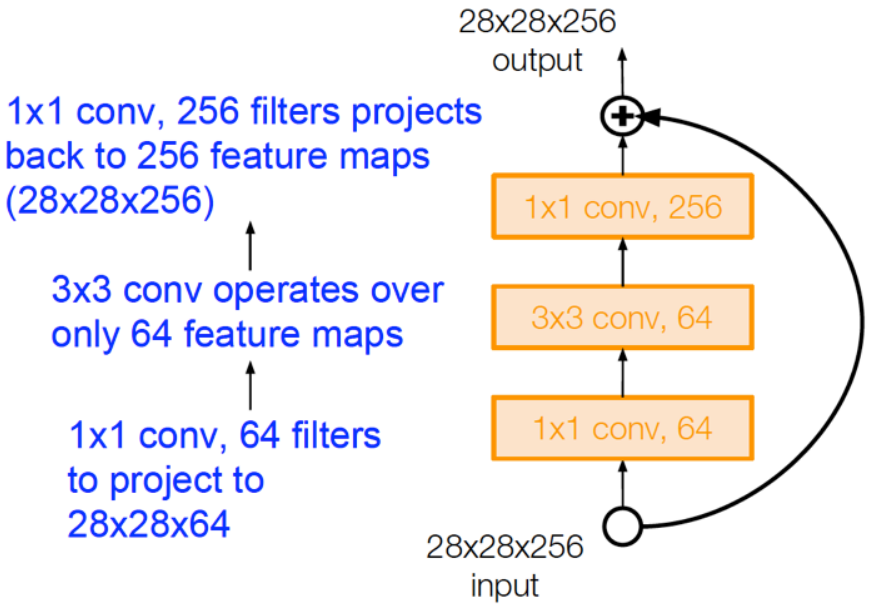

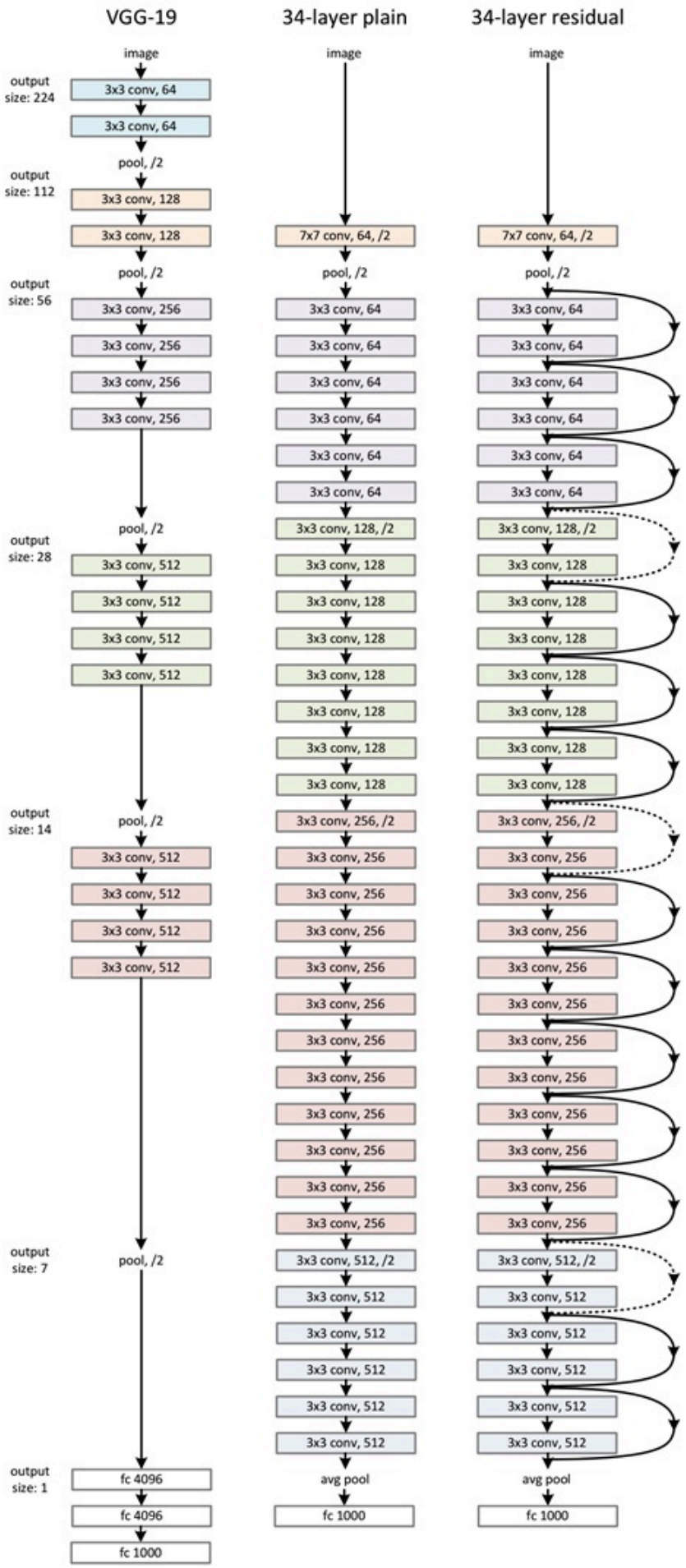
VGG-19
34-layer plain
34-layer residual
image
output size: 224
3x3 conv, 64
3x3 conv, 64
pool, /2
output size: 112
3x3 conv, 128
3x3 conv, 128
pool, /2
output size: 56
3x3 conv, 256
3x3 conv, 256
3x3 conv, 256
3x3 conv, 256
pool, /2
output size: 28
3x3 conv, 512
3x3 conv, 512
3x3 conv, 512
3x3 conv, 512
pool, /2
output size: 14
3x3 conv, 512
3x3 conv, 512
3x3 conv, 512
3x3 conv, 512
pool, /2
output size: 7
fc 4096
fc 4096
fc 1000
output size: 1
7x7 conv, 64, /2
pool, /2
3x3 conv, 64
3x3 conv, 128, /2
3x3 conv, 128
3x3 conv, 256, /2
3x3 conv, 256
3x3 conv, 512, /2
3x3 conv, 512
avg pool
fc 1000

FLOPS

layer name	output size	18-layer	34-layer	50-layer	101-layer	152-layer
conv1	112×112	7×7, 64, stride 2				
conv2_x	56×56	3×3 max pool, stride 2				
		$\begin{bmatrix} 3\times3, 64 \\ 3\times3, 64 \end{bmatrix}\times2$	$\begin{bmatrix} 3\times3, 64 \\ 3\times3, 64 \end{bmatrix}\times3$	$\begin{bmatrix} 1\times1, 64 \\ 3\times3, 64 \\ 1\times1, 256 \end{bmatrix}\times3$	$\begin{bmatrix} 1\times1, 64 \\ 3\times3, 64 \\ 1\times1, 256 \end{bmatrix}\times3$	$\begin{bmatrix} 1\times1, 64 \\ 3\times3, 64 \\ 1\times1, 256 \end{bmatrix}\times3$
conv3_x	28×28	$\begin{bmatrix} 3\times3, 128 \\ 3\times3, 128 \end{bmatrix}\times2$	$\begin{bmatrix} 3\times3, 128 \\ 3\times3, 128 \end{bmatrix}\times4$	$\begin{bmatrix} 1\times1, 128 \\ 3\times3, 128 \\ 1\times1, 512 \end{bmatrix}\times4$	$\begin{bmatrix} 1\times1, 128 \\ 3\times3, 128 \\ 1\times1, 512 \end{bmatrix}\times4$	$\begin{bmatrix} 1\times1, 128 \\ 3\times3, 128 \\ 1\times1, 512 \end{bmatrix}\times8$
conv4_x	14×14	$\begin{bmatrix} 3\times3, 256 \\ 3\times3, 256 \end{bmatrix}\times2$	$\begin{bmatrix} 3\times3, 256 \\ 3\times3, 256 \end{bmatrix}\times6$	$\begin{bmatrix} 1\times1, 256 \\ 3\times3, 256 \\ 1\times1, 1024 \end{bmatrix}\times6$	$\begin{bmatrix} 1\times1, 256 \\ 3\times3, 256 \\ 1\times1, 1024 \end{bmatrix}\times23$	$\begin{bmatrix} 1\times1, 256 \\ 3\times3, 256 \\ 1\times1, 1024 \end{bmatrix}\times36$
conv5_x	7×7	$\begin{bmatrix} 3\times3, 512 \\ 3\times3, 512 \end{bmatrix}\times2$	$\begin{bmatrix} 3\times3, 512 \\ 3\times3, 512 \end{bmatrix}\times3$	$\begin{bmatrix} 1\times1, 512 \\ 3\times3, 512 \\ 1\times1, 2048 \end{bmatrix}\times3$	$\begin{bmatrix} 1\times1, 512 \\ 3\times3, 512 \\ 1\times1, 2048 \end{bmatrix}\times3$	$\begin{bmatrix} 1\times1, 512 \\ 3\times3, 512 \\ 1\times1, 2048 \end{bmatrix}\times3$
	1×1	average pool, 1000-d fc, softmax				
FLOPs		1.8×10^9	3.6×10^9	3.8×10^9	7.6×10^9	11.3×10^9

Case Study: ResNet

[He et al., 2015]

Training ResNet in practice:

- Batch Normalization after every CONV layer
- Xavier/2 initialization from He et al.
- SGD + Momentum (0.9)
- Learning rate: 0.1, divided by 10 when validation error plateaus
- Mini-batch size 256
- Weight decay of 1e-5
- No dropout used

实验结果

普通的网络出现了退化现象，但是ResNet可以继续训练下去

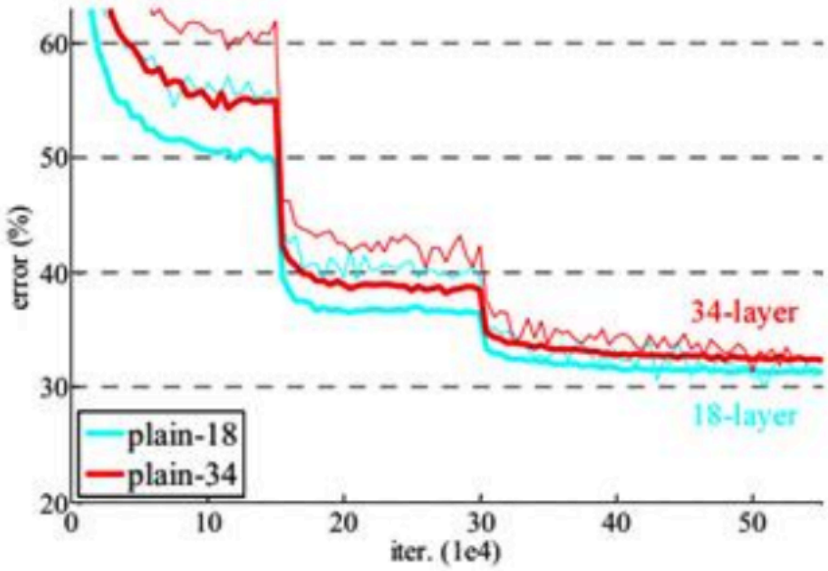

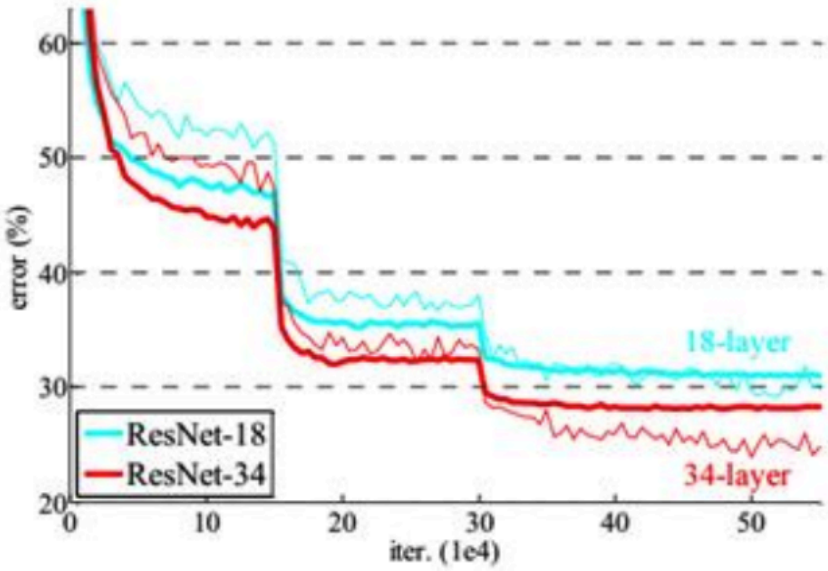

method	top-1 err.	top-5 err.
VGG [41] (ILSVRC'14)	-	8.43†
GoogLeNet [44] (ILSVRC'14)	-	7.89
VGG [41] (v5)	24.4	7.1
PReLU-net [13]	21.59	5.71
BN-inception [16]	21.99	5.81
ResNet-34 B	21.84	5.71
ResNet-34 C	21.53	5.60
ResNet-50	20.74	5.25
ResNet-101	19.87	4.60
ResNet-152	**19.38**	**4.49**

Case Study: ResNet

[He et al., 2015]

Experimental Results

- Able to train very deep networks without degrading (152 layers on ImageNet, 1202 on Cifar)
- Deeper networks now achieve lowing training error as expected
- Swept 1st place in all ILSVRC and COCO 2015 competitions

MSRA @ ILSVRC & COCO 2015 Competitions

- **1st places in all five main tracks**
  - ImageNet Classification: "*Ultra-deep*" (quote Yann) 152-layer nets
  - ImageNet Detection: 16% better than 2nd
  - ImageNet Localization: 27% better than 2nd
  - COCO Detection: 11% better than 2nd
  - COCO Segmentation: 12% better than 2nd

Case Study: ResNet

[He et al., 2015]

Experimental Results

- Able to train very deep networks without degrading (152 layers on ImageNet, 1202 on Cifar)
- Deeper networks now achieve lowing training error as expected
- Swept 1st place in all ILSVRC and COCO 2015 competitions

MSRA @ ILSVRC & COCO 2015 Competitions

- **1st places in all five main tracks**
  - ImageNet Classification: "*Ultra-deep*" (quote Yann) 152-layer nets
  - ImageNet Detection: 16% better than 2nd
  - ImageNet Localization: 27% better than 2nd
  - COCO Detection: 11% better than 2nd
  - COCO Segmentation: 12% better than 2nd

ILSVRC 2015 classification winner (3.6% top 5 error) -- better than "human performance"! (Russakovsky 2014)

ImageNet Large Scale Visual Recognition Challenge (ILSVRC) winners

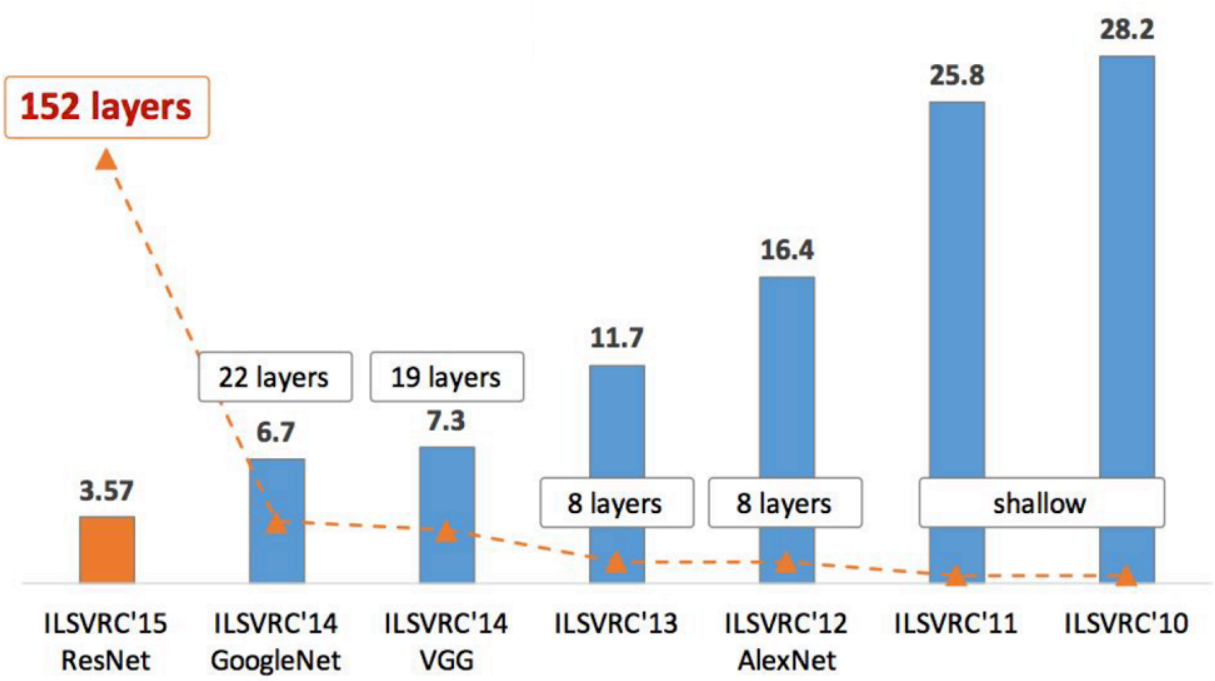

Figure copyright Kaiming He, 2016. Reproduced with permission.

Improving ResNets...

Identity Mappings in Deep Residual Networks

[He et al. 2016]

- Improved ResNet block design from creators of ResNet
- Creates a more direct path for propagating information throughout network (moves activation to residual mapping pathway)
- Gives better performance

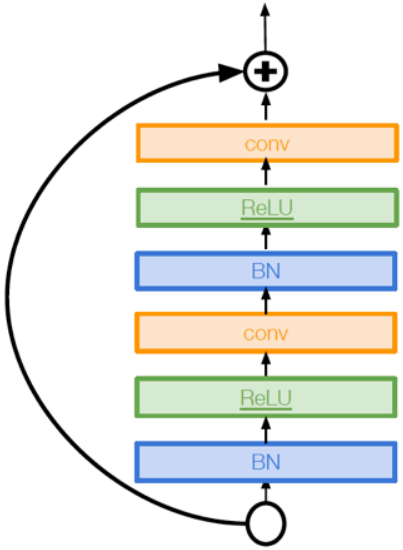

网络的改进

Pre-Activation

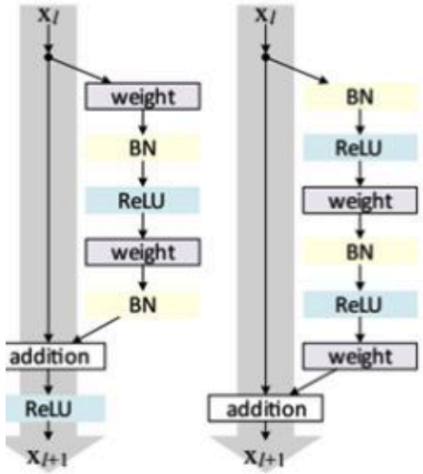

(a) original (b) proposed

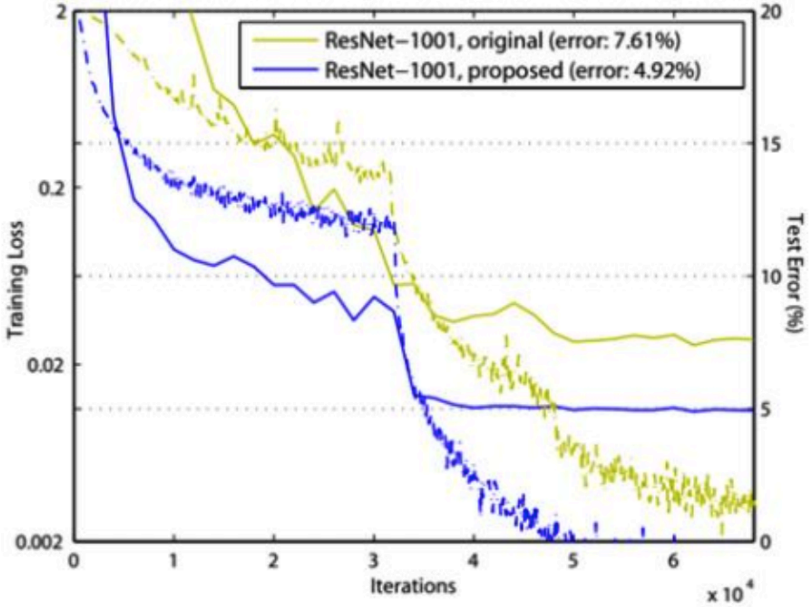

Comparing complexity...

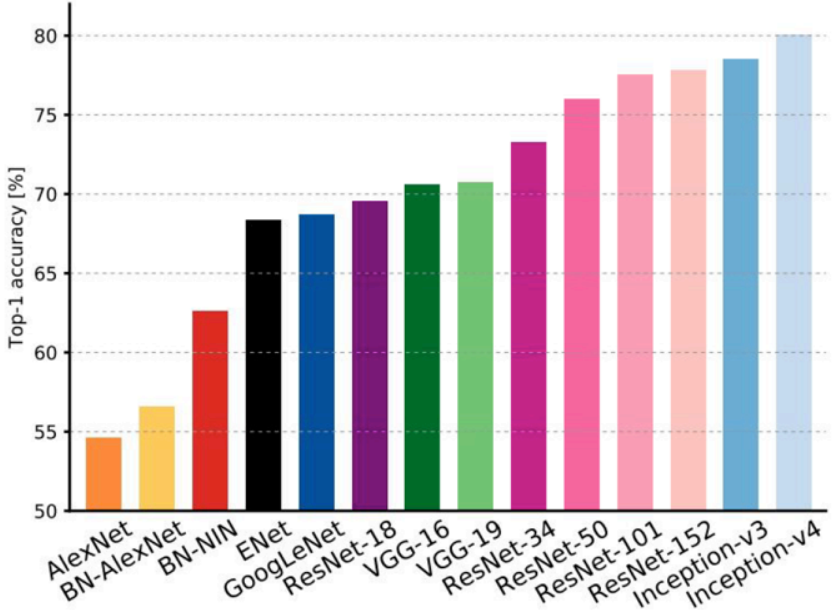

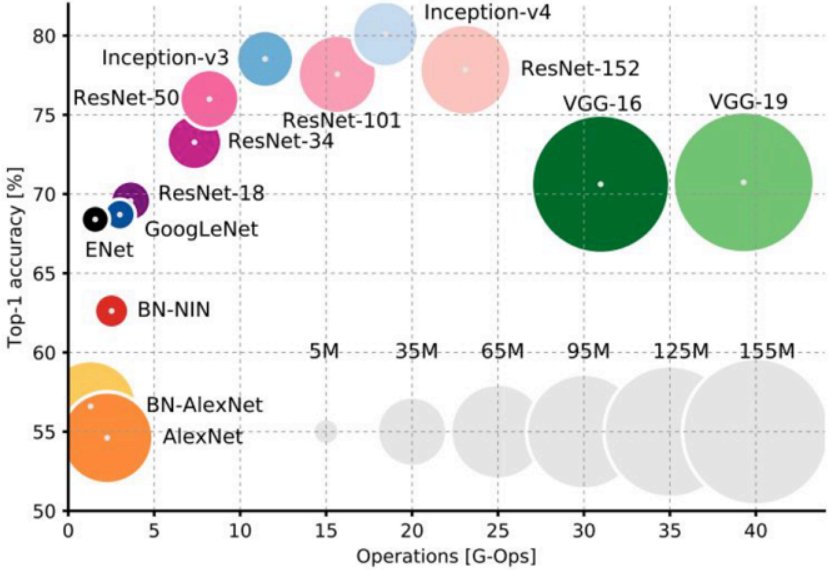

An Analysis of Deep Neural Network Models for Practical Applications, 2017.

Figures copyright Alfredo Canziani, Adam Paszke, Eugenio Culurciello, 2017. Reproduced with permission.

Comparing complexity...

Inception-v4: Resnet + Inception!

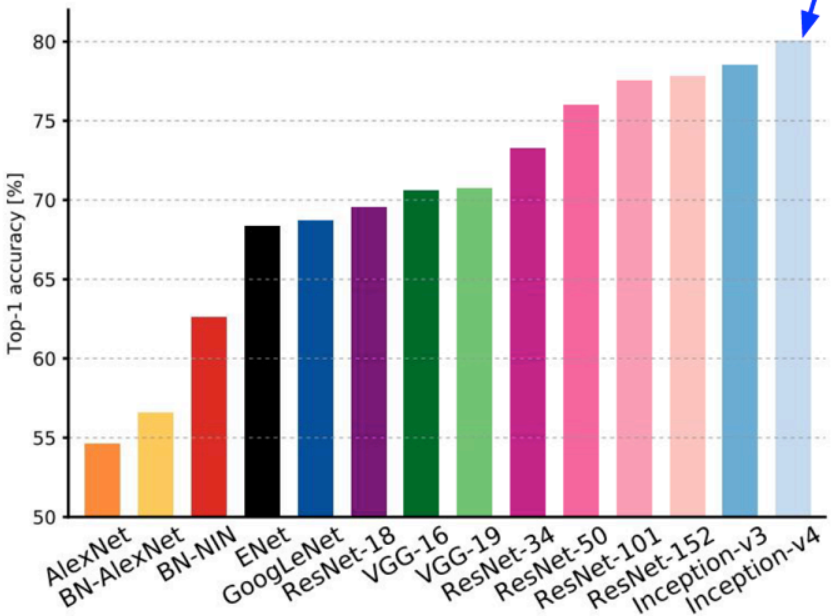

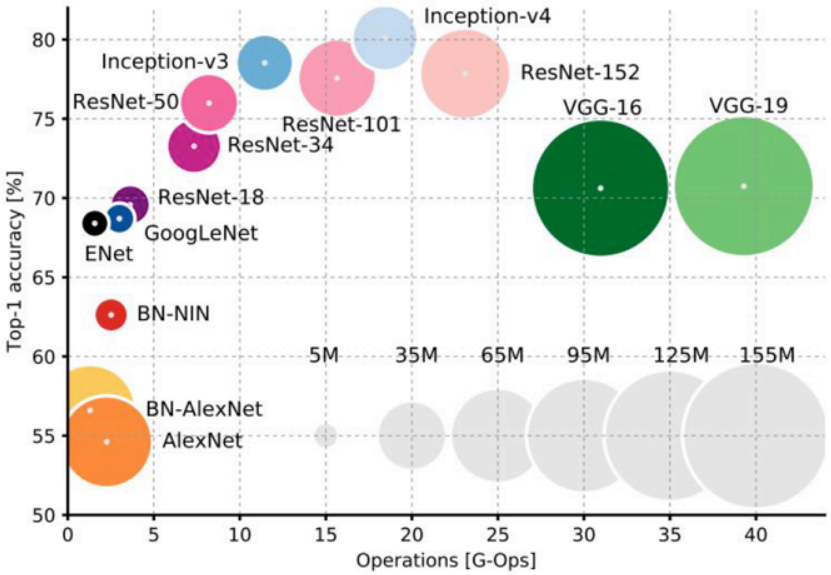

An Analysis of Deep Neural Network Models for Practical Applications, 2017.

Figures copyright Alfredo Canziani, Adam Paszke, Eugenio Culurciello, 2017. Reproduced with permission.

Comparing complexity...

VGG: Highest memory, most operations

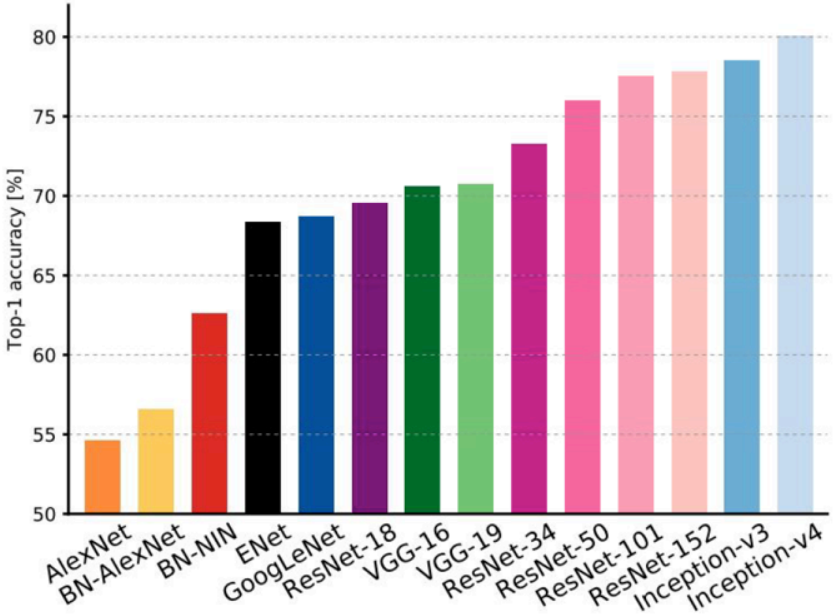

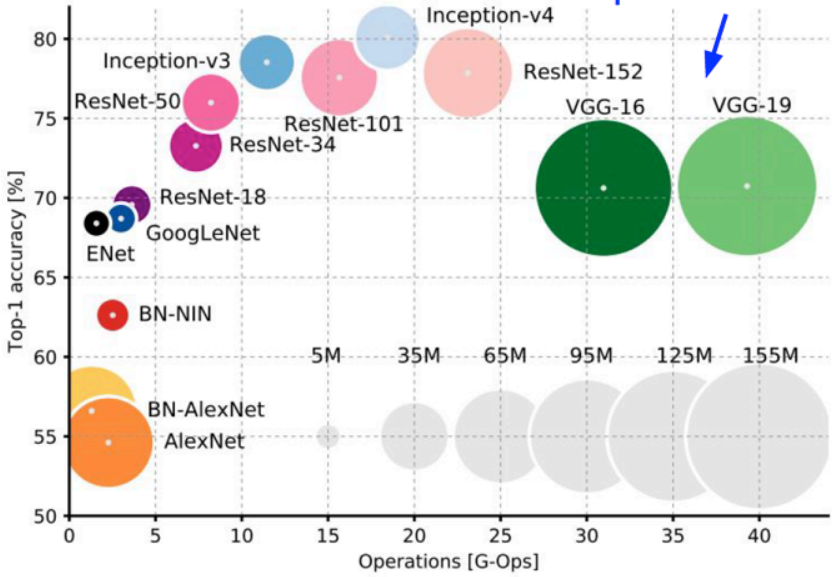

An Analysis of Deep Neural Network Models for Practical Applications, 2017.

Figures copyright Alfredo Canziani, Adam Paszke, Eugenio Culurciello, 2017. Reproduced with permission.

Comparing complexity...

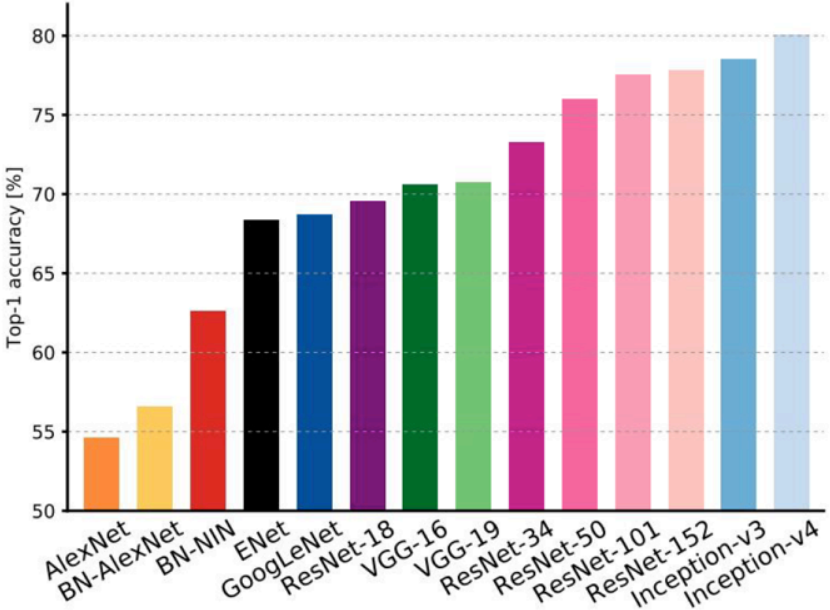

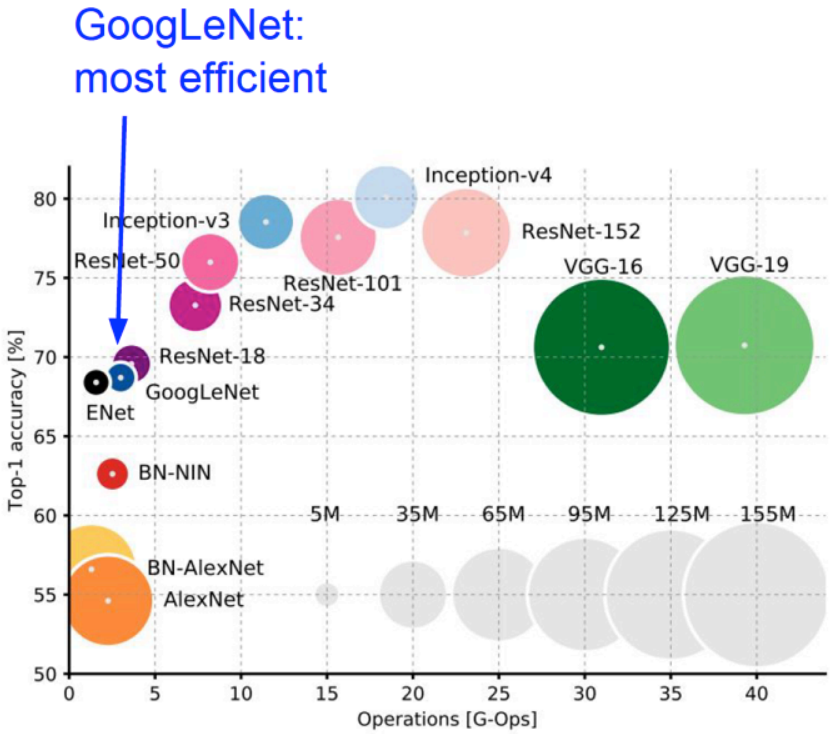

An Analysis of Deep Neural Network Models for Practical Applications, 2017.

Figures copyright Alfredo Canziani, Adam Paszke, Eugenio Culurciello, 2017. Reproduced with permission.

Comparing complexity...

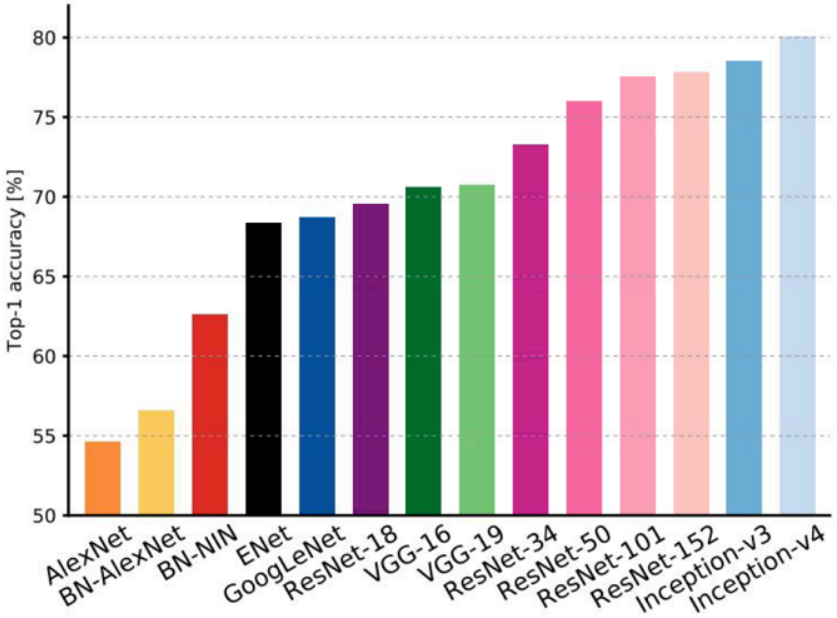

AlexNet:
Smaller compute, still memory heavy, lower accuracy

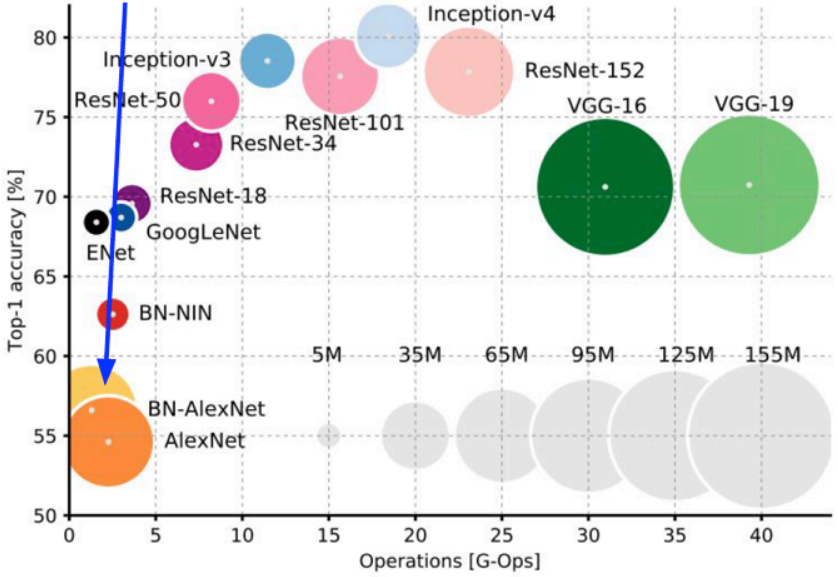

An Analysis of Deep Neural Network Models for Practical Applications, 2017.

Figures copyright Alfredo Canziani, Adam Paszke, Eugenio Culurciello, 2017. Reproduced with permission.

Comparing complexity...

ResNet:
Moderate efficiency depending on model, highest accuracy

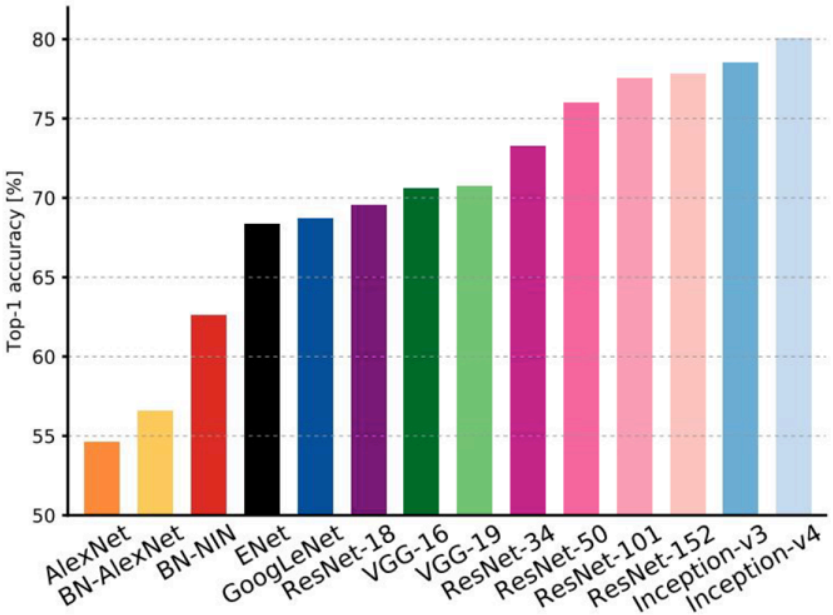

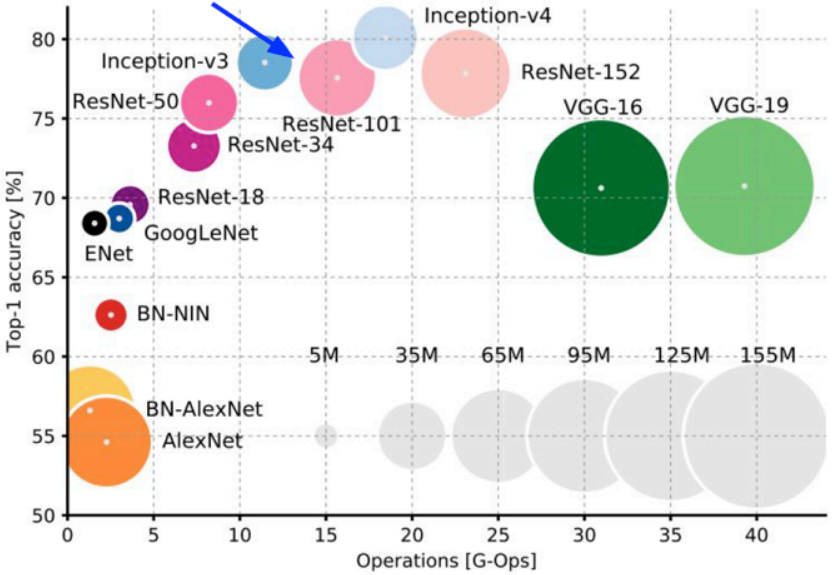

An Analysis of Deep Neural Network Models for Practical Applications, 2017.

Figures copyright Alfredo Canziani, Adam Paszke, Eugenio Culurciello, 2017. Reproduced with permission.

Forward pass time and power consumption

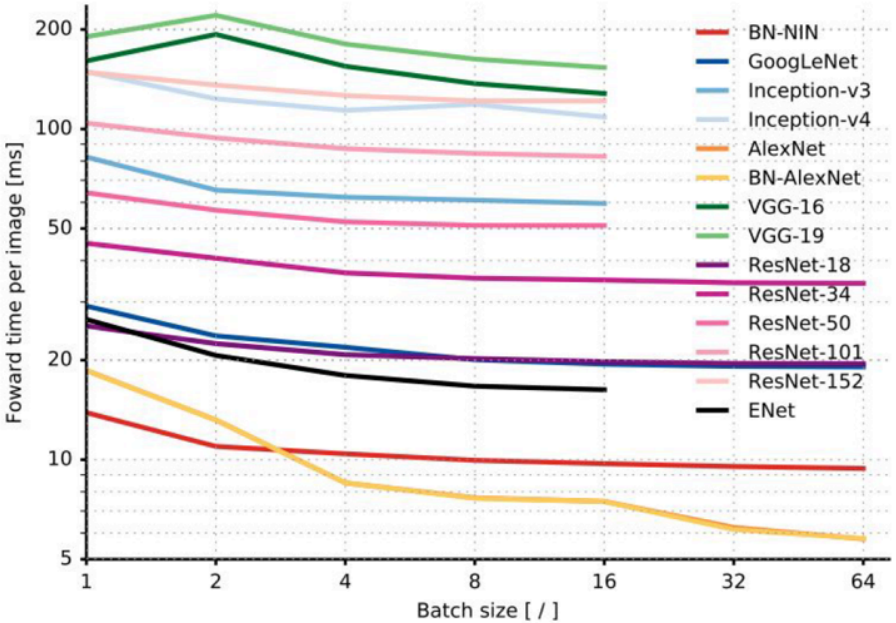

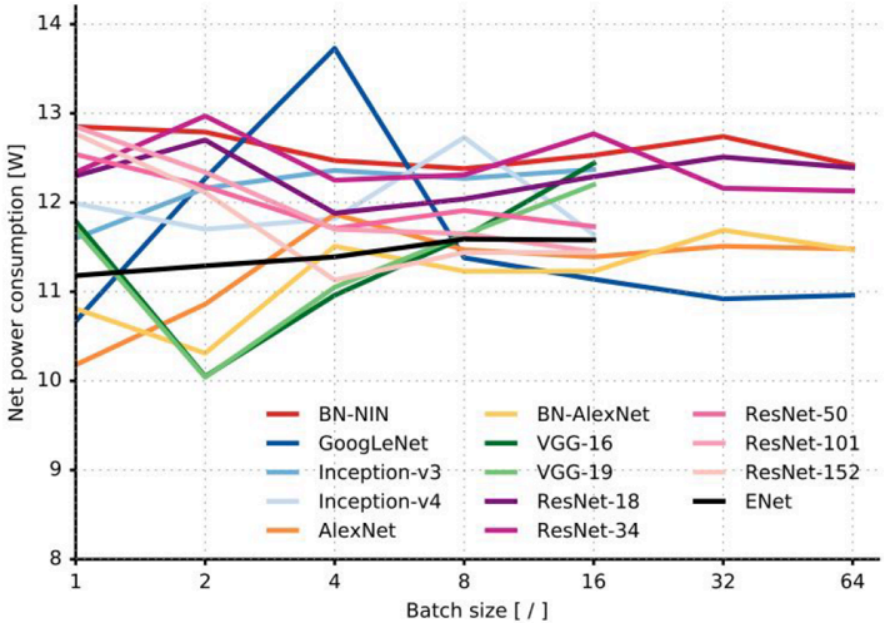

An Analysis of Deep Neural Network Models for Practical Applications, 2017.

Figures copyright Alfredo Canziani, Adam Paszke, Eugenio Culurciello, 2017. Reproduced with permission.

Network in Network (NiN)

[Lin et al. 2014]

- Mlpconv layer with "micronetwork" within each conv layer to compute more abstract features for local patches
- Micronetwork uses multilayer perceptron (FC, i.e. 1x1 conv layers)
- Precursor to GoogLeNet and ResNet "bottleneck" layers
- Philosophical inspiration for GoogLeNet

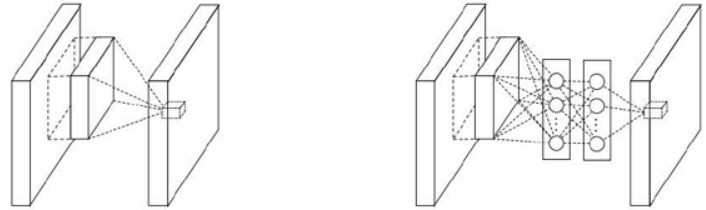

(a) Linear convolution layer (b) Mlpconv layer

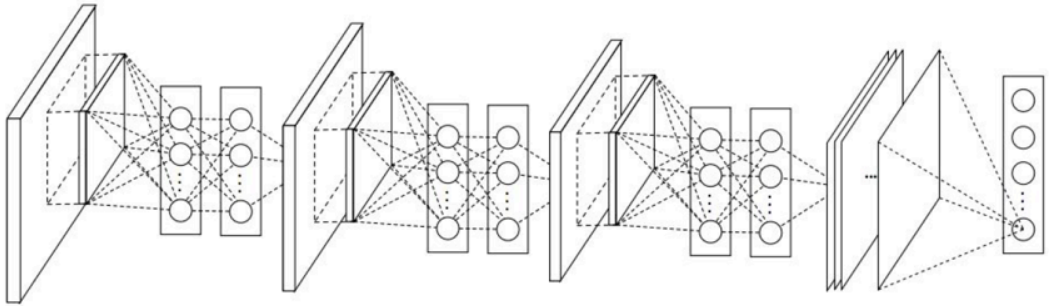

Figures copyright Lin et al., 2014. Reproduced with permission.

NiN

传统的带有激活的卷积运算如下

$$f_{i,j,k} = \max(w_k^T x_{i,j}, 0).$$

带有NiN多层结构的卷积运算如下

$$\begin{aligned} f_{i,j,k_1}^1 &= \max({w_{k_1}^1}^T x_{i,j} + b_{k_1}, 0). \\ &\vdots \\ f_{i,j,k_n}^n &= \max({w_{k_n}^n}^T f_{i,j}^{n-1} + b_{k_n}, 0). \end{aligned}$$

Improving ResNets...

Wide Residual Networks

[Zagoruyko et al. 2016]

- Argues that residuals are the important factor, not depth
- User wider residual blocks (F x k filters instead of F filters in each layer)
- 50-layer wide ResNet outperforms 152-layer original ResNet
- Increasing width instead of depth more computationally efficient (parallelizable)

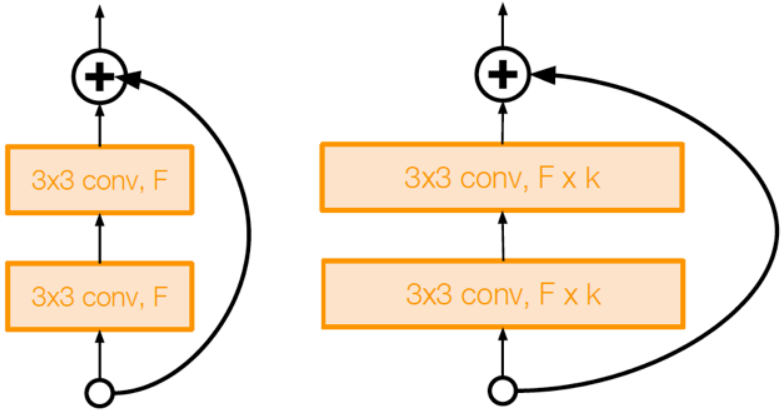

Basic residual block

Wide residual block

Improving ResNets...

Aggregated Residual Transformations for Deep Neural Networks (ResNeXt)

[Xie et al. 2016]

- Also from creators of ResNet
- Increases width of residual block through multiple parallel pathways ("cardinality")
- Parallel pathways similar in spirit to Inception module

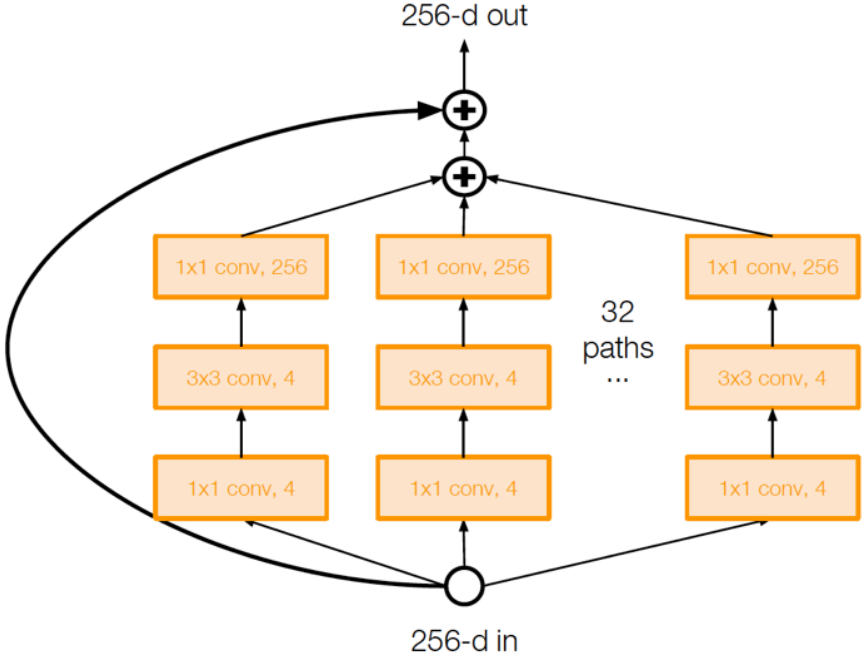

Improving ResNets...

Deep Networks with Stochastic Depth

[Huang et al. 2016]

- Motivation: reduce vanishing gradients and training time through short networks during training
- Randomly drop a subset of layers during each training pass
- Bypass with identity function
- Use full deep network at test time

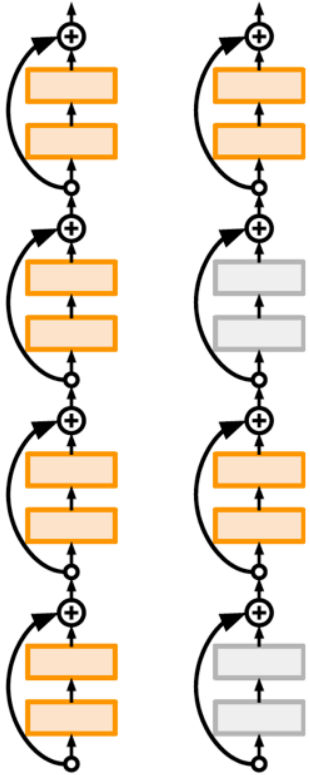

Beyond ResNets...

FractalNet: Ultra-Deep Neural Networks without Residuals

[Larsson et al. 2017]

- Argues that key is transitioning effectively from shallow to deep and residual representations are not necessary
- Fractal architecture with both shallow and deep paths to output
- Trained with dropping out sub-paths
- Full network at test time

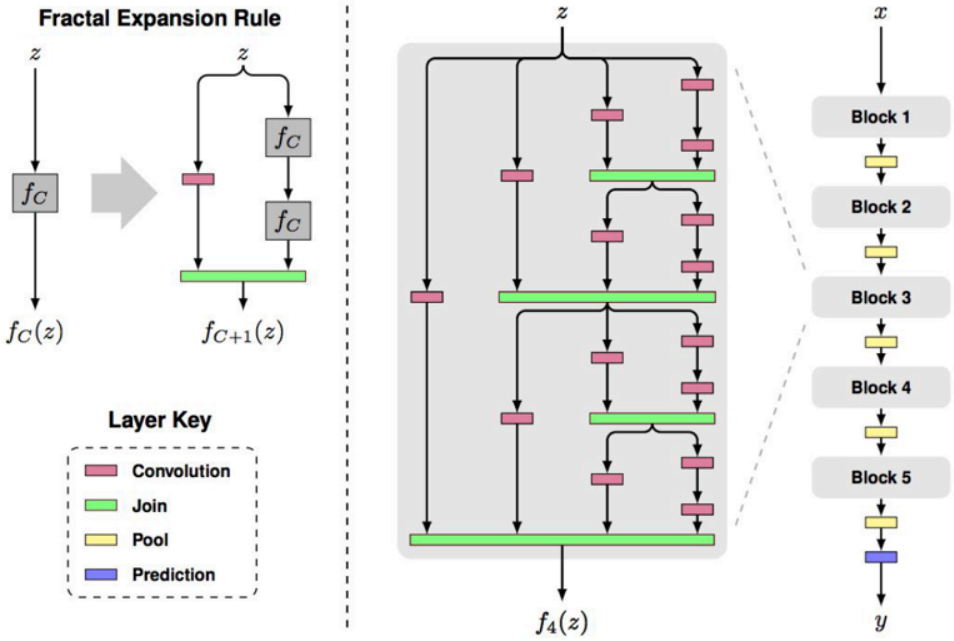

Figures copyright Larsson et al., 2017. Reproduced with permission.

Beyond ResNets...

Densely Connected Convolutional Networks

[Huang et al. 2017]

- Dense blocks where each layer is connected to every other layer in feedforward fashion
- Alleviates vanishing gradient, strengthens feature propagation, encourages feature reuse

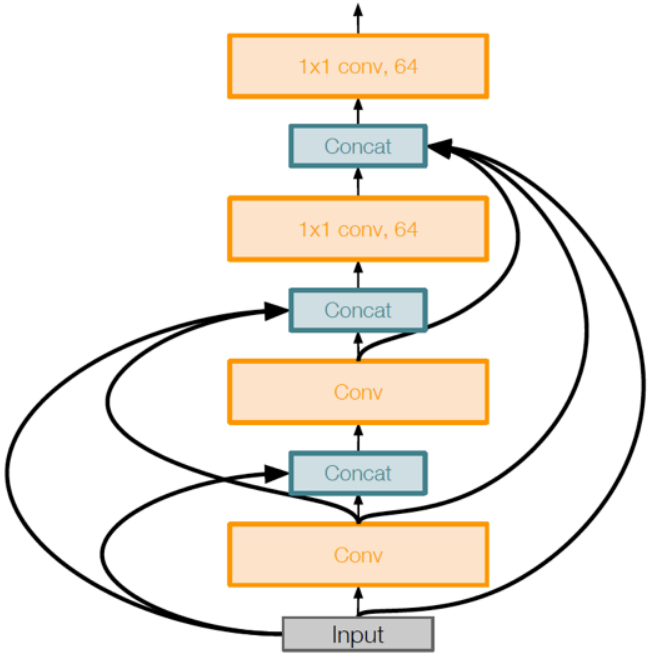

Dense Block

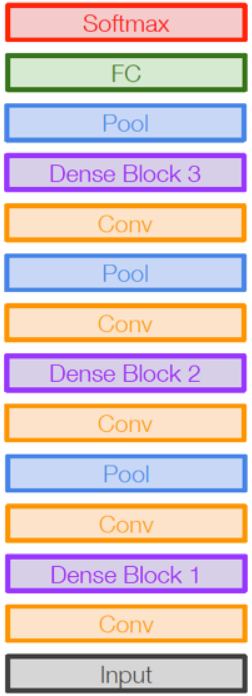

Efficient networks...

SqueezeNet: AlexNet-level Accuracy With 50x Fewer Parameters and <0.5Mb Model Size

[Iandola et al. 2017]

- Fire modules consisting of a 'squeeze' layer with 1x1 filters feeding an 'expand' layer with 1x1 and 3x3 filters
- AlexNet level accuracy on ImageNet with 50x fewer parameters
- Can compress to 510x smaller than AlexNet (0.5Mb)

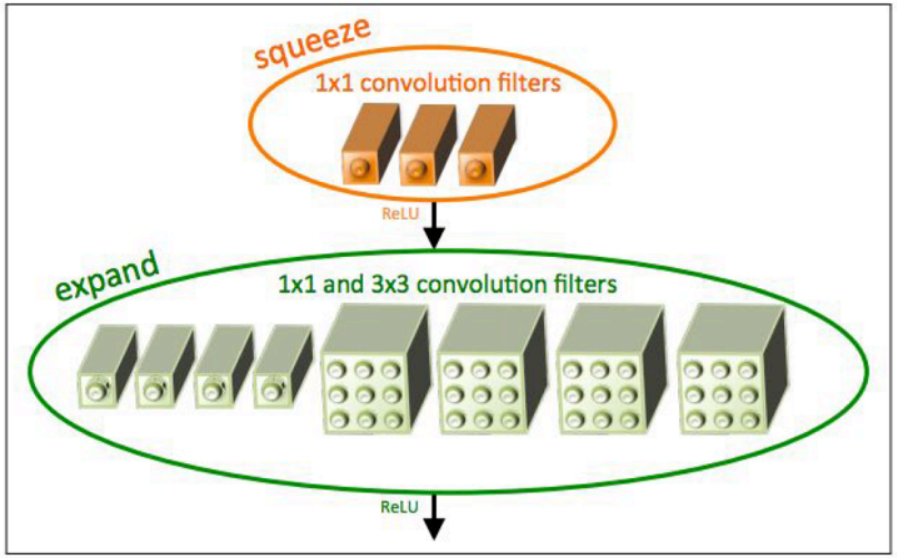

Figure copyright Iandola, Han, Moskewicz, Ashraf, Dally, Keutzer, 2017. Reproduced with permission.

Summary: CNN Architectures

- VGG, GoogLeNet, ResNet all in wide use, available in model zoos
- ResNet current best default
- Trend towards extremely deep networks
- Significant research centers around design of layer / skip connections and improving gradient flow
- Even more recent trend towards examining necessity of depth vs. width and residual connections