Title	**T450D控制板**
Code	**5.04.51805**
Version	**A02**
Designer	**CYC**
Date	**2026/1/28**

Contents

Series	Desciption	Page	Series	Desciption	Page
1	Cover	1			
2	Contents	2			
3	RKSch	3			
4	RKPower	4			
5	RKCSI_LVDS_HDMI	5			
6	RKUsb	6			
7	RKWIFI_BT	7			
8	RKGMAC0	8			
9	RKKey_RGB_TF	9			
10	RKPort	10			
11	GDMCU	11			
12	STMPower	12			
13	STMMCU	13			
14	STMMOTOR	14			
15	STMXDRIVER	15			
16	STMYDRIVER	16			
17	STMFAN&RGB	17			
18	STMIOPORT	18			
19	STMSch	19			
20	STMUSB	20			
21	ChangeList	21			

LVDS/MIPI DSI

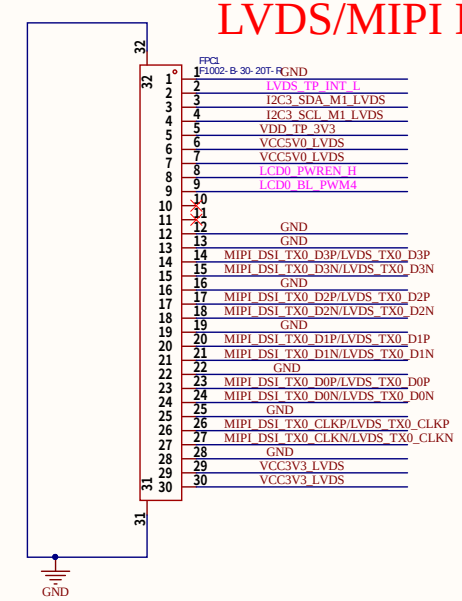

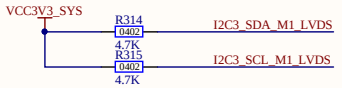

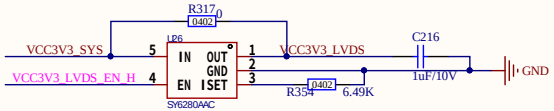

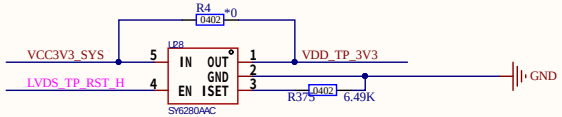

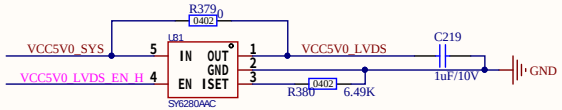

Project	5.04.51805A02.PrjPcb		
File	5.04.51805A02_RKCSI_LVDS_HDMI.SchDoc		
Comments			
Page	Sheet 3 of 21	Size	A3

GMAC0 10/100/1000M

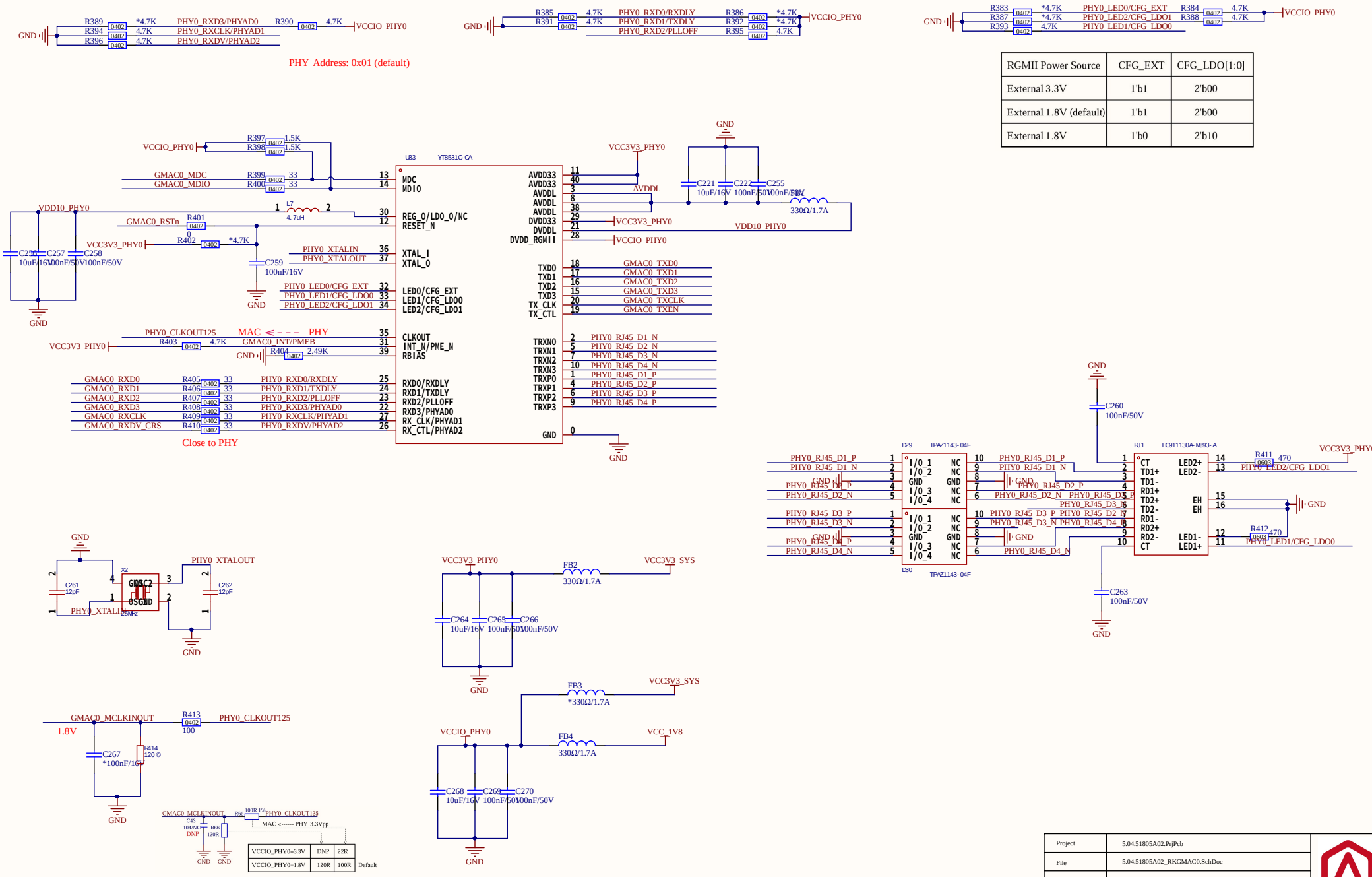

RGMII Power Source	CFG_EXT	CFG_LDO[1:0]
External 3.3V	1'b1	2'b00
External 1.8V (default)	1'b1	2'b00
External 1.8V	1'b0	2'b10

Project	5.04.51805A02.PrjPcb		
File	5.04.51805A02_RKGMAC0.SchDoc		
Comments			
Page	Sheet 4 of 21	Size	A3

PWERON

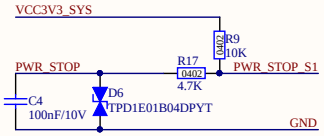

RESET

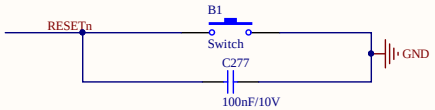

UPDATE

MCU工作指示

Project	5.04.51805A02.PrjPcb		
File	5.04.51805A02_RKKey_RGB_TF.SchDoc		
Comments			
Page	Sheet 5 of 21	Size	A3

CAN

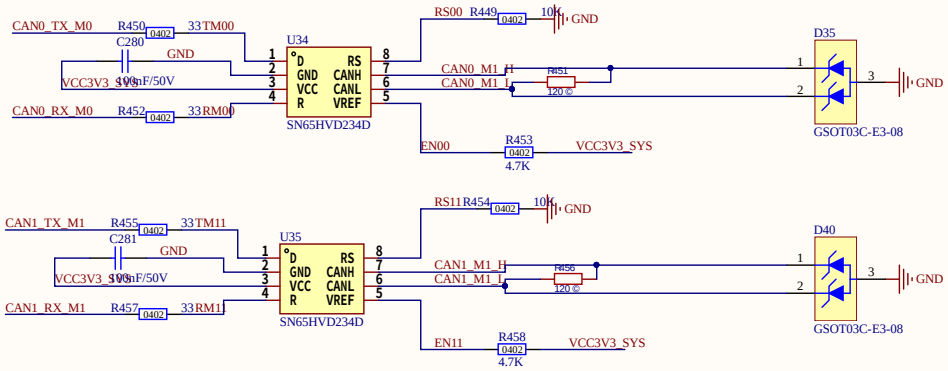

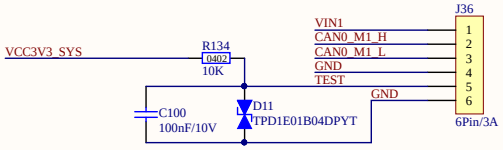

UART

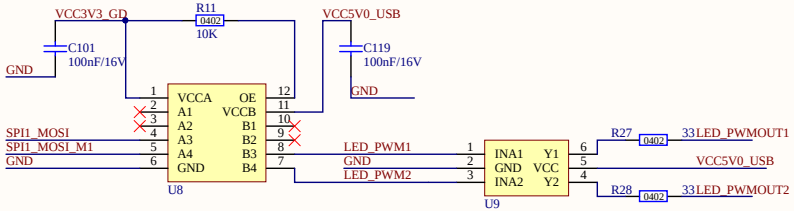

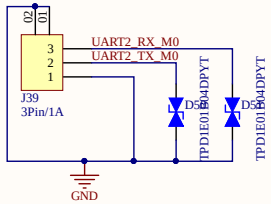

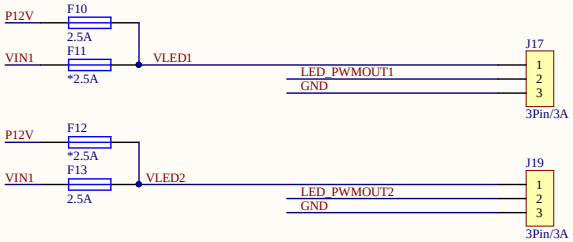

RTC

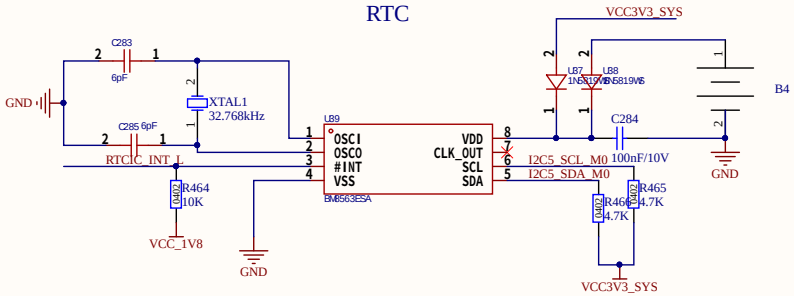

Project	5.04.51805A02.PrjPcb		
File	5.04.51805A02_RKPort.SchDoc		
Comments			
Page	Sheet 6 of 21	Size	A3

Power

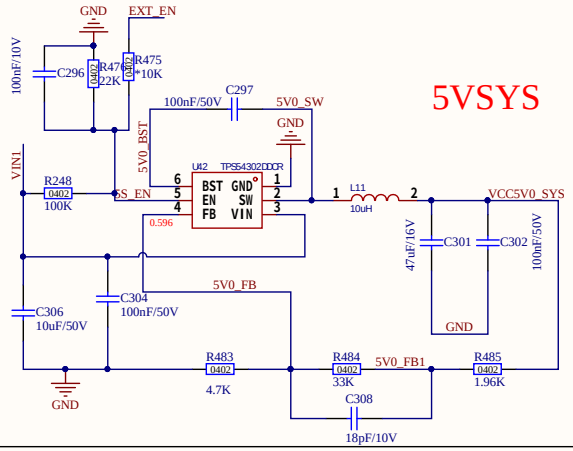

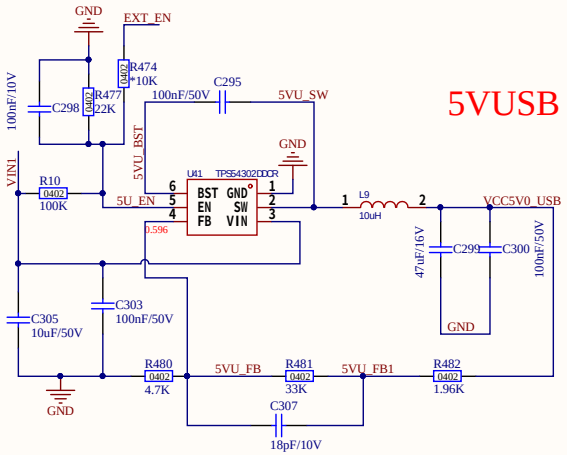

3.3VSYS 1.5A

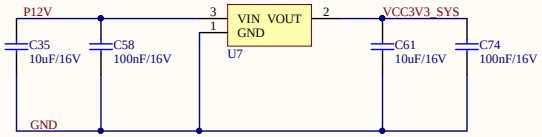

Project	5.04.51805A02.PrjPcb		
File	5.04.51805A02_RKPower.SchDoc		
Comments			
Page	Sheet 7 of 21	Size	A3

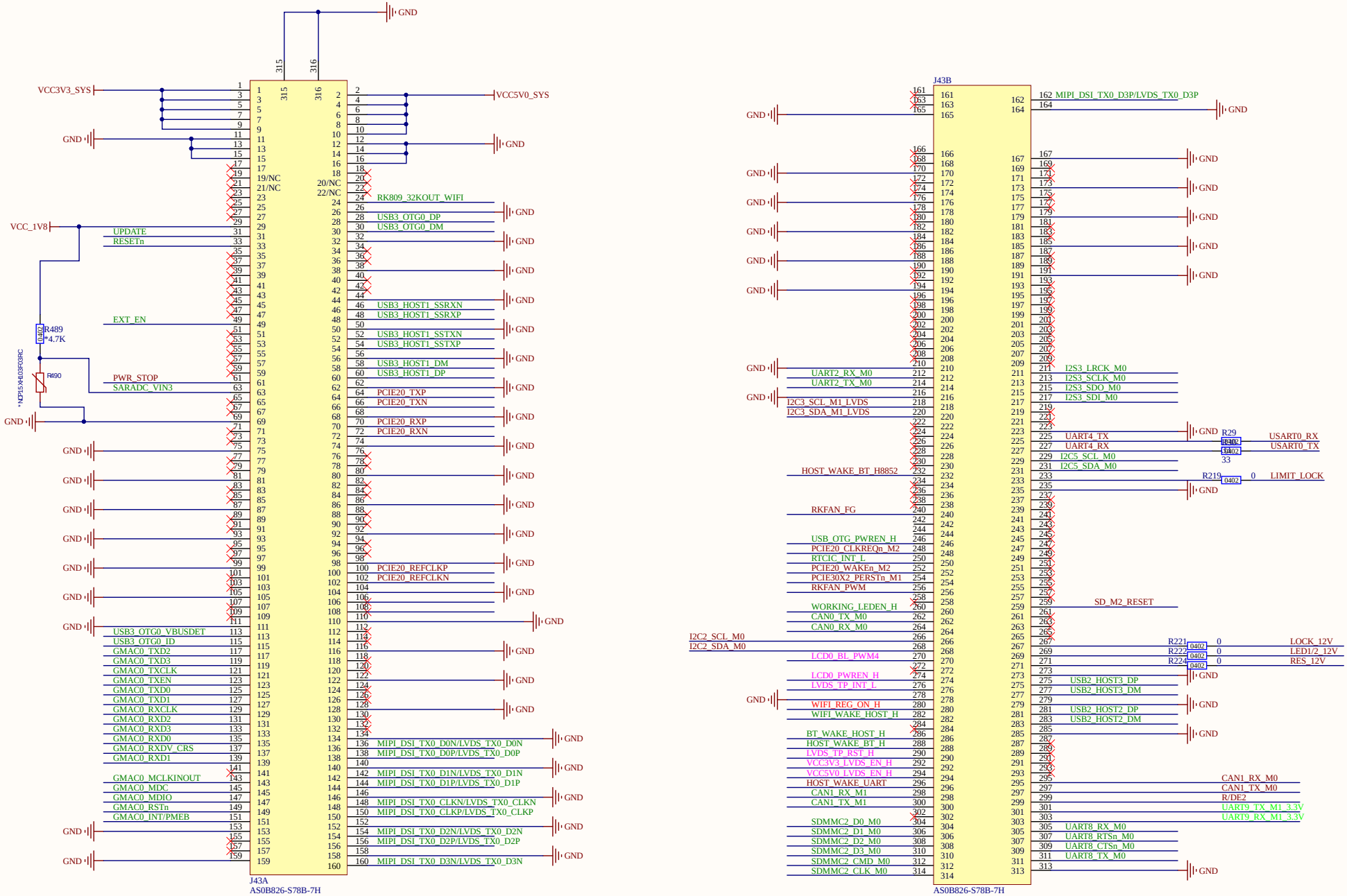

Project	5.04.51805A02.PrjPcb		
File	5.04.51805A02_RKSch.SchDoc		
Comments			
Page	Sheet 8 of 21	Size	A3

USB

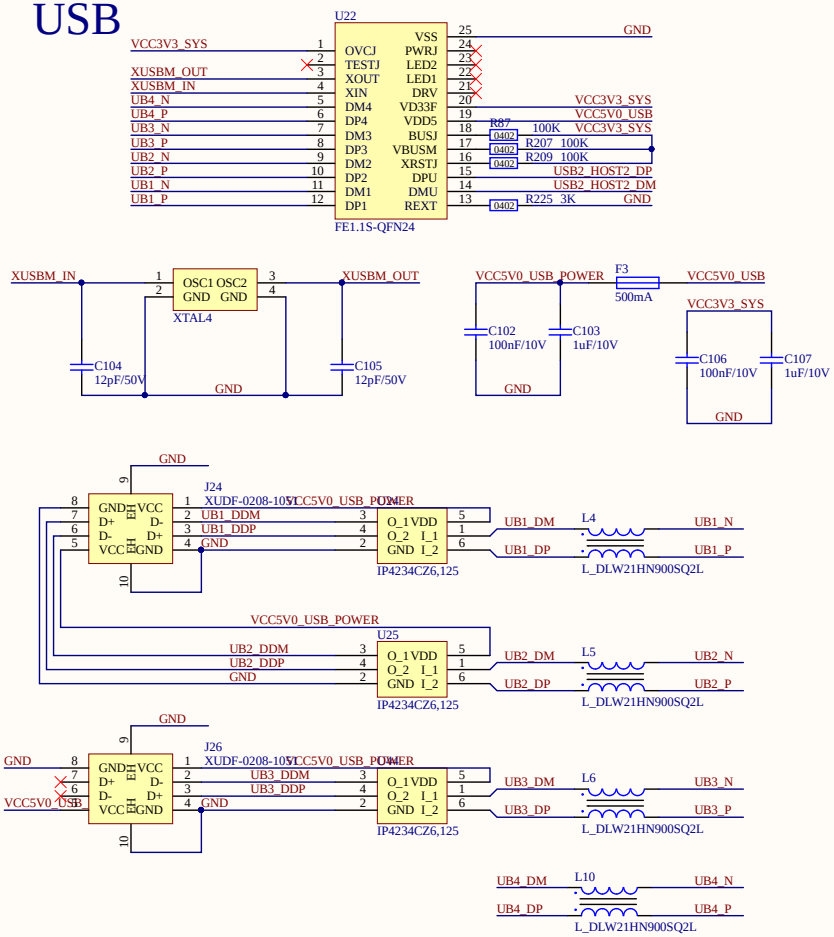

USB3.0

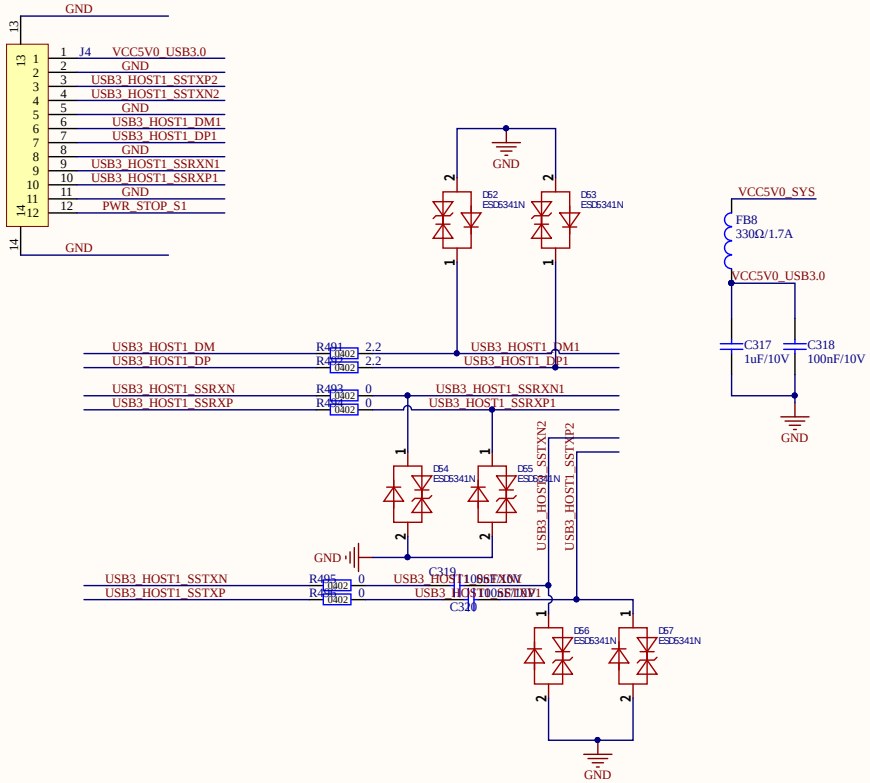

OTG

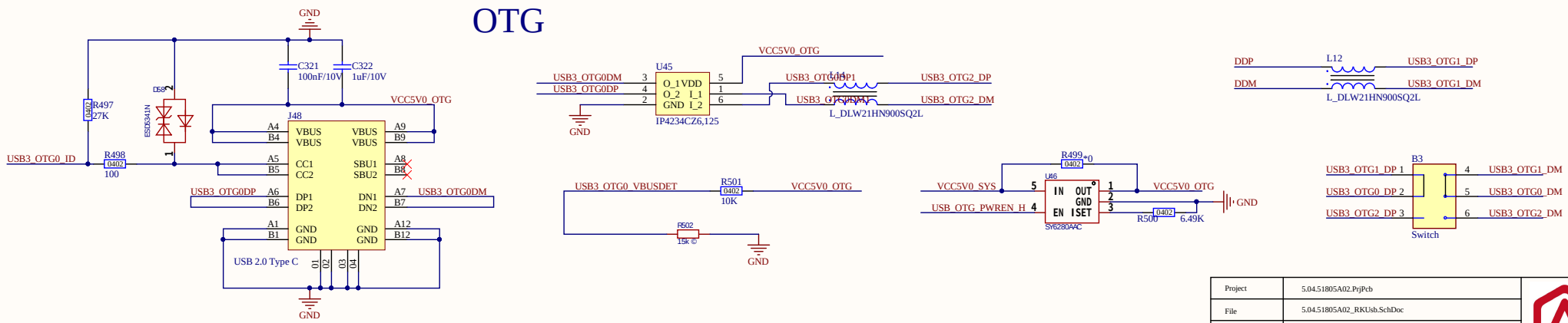

Project	5.04.51805A02.PrjPcb		
File	5.04.51805A02_RKUsb.SchDoc		
Comments			
Page	Sheet 9 of 21	Size	A3

WIFI

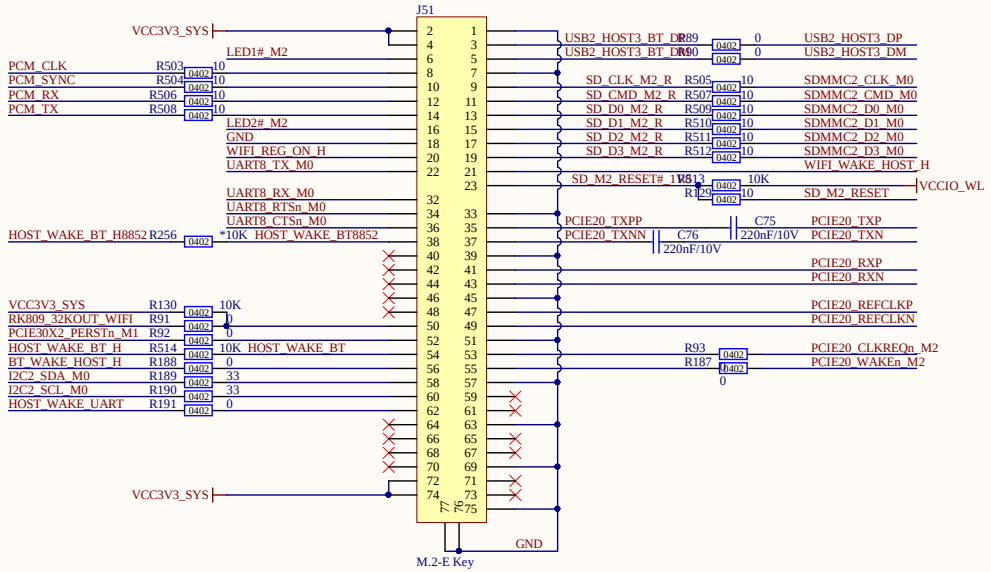

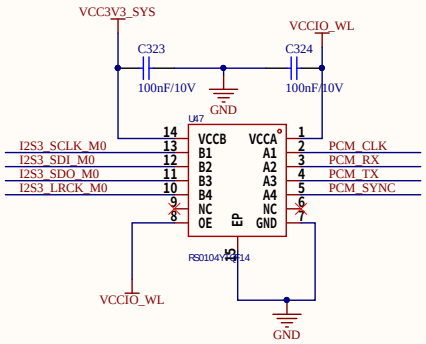

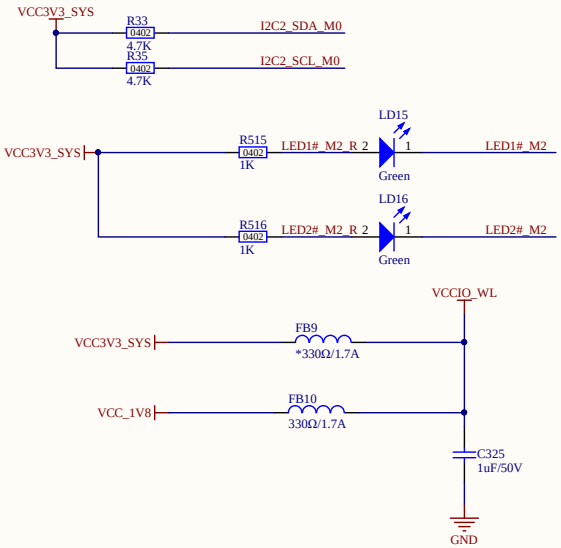

Project	5.04.51805A02.PrjPcb		
File	5.04.51805A02_RKWIFI_BT.SchDoc		
Comments			
Page	Sheet 10 of 21	Size	A3

GDMCU

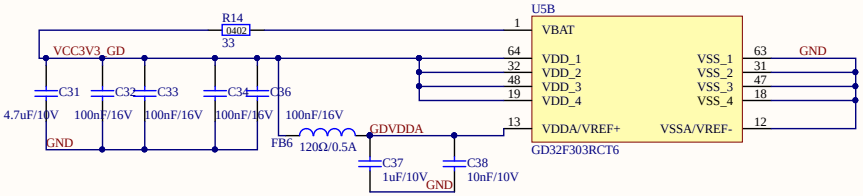

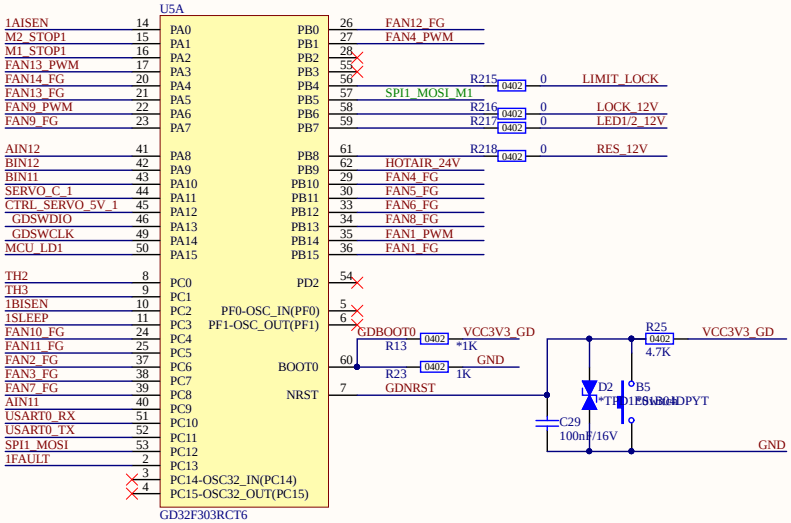

Iout=0.3A， Imax=1A LDO_3.3V

3.3VSYS

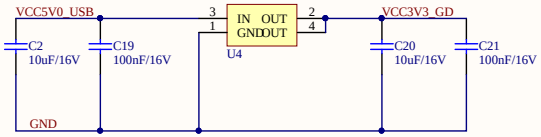

SWD

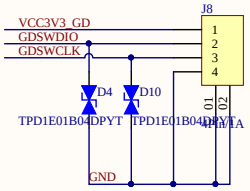

Project	5.04.51805A02.PrjPcb		
File	5.04.51805A02_GDMCU.SchDoc		
Comments			
Page	Sheet 11 of 21	Size	A3

CTRL

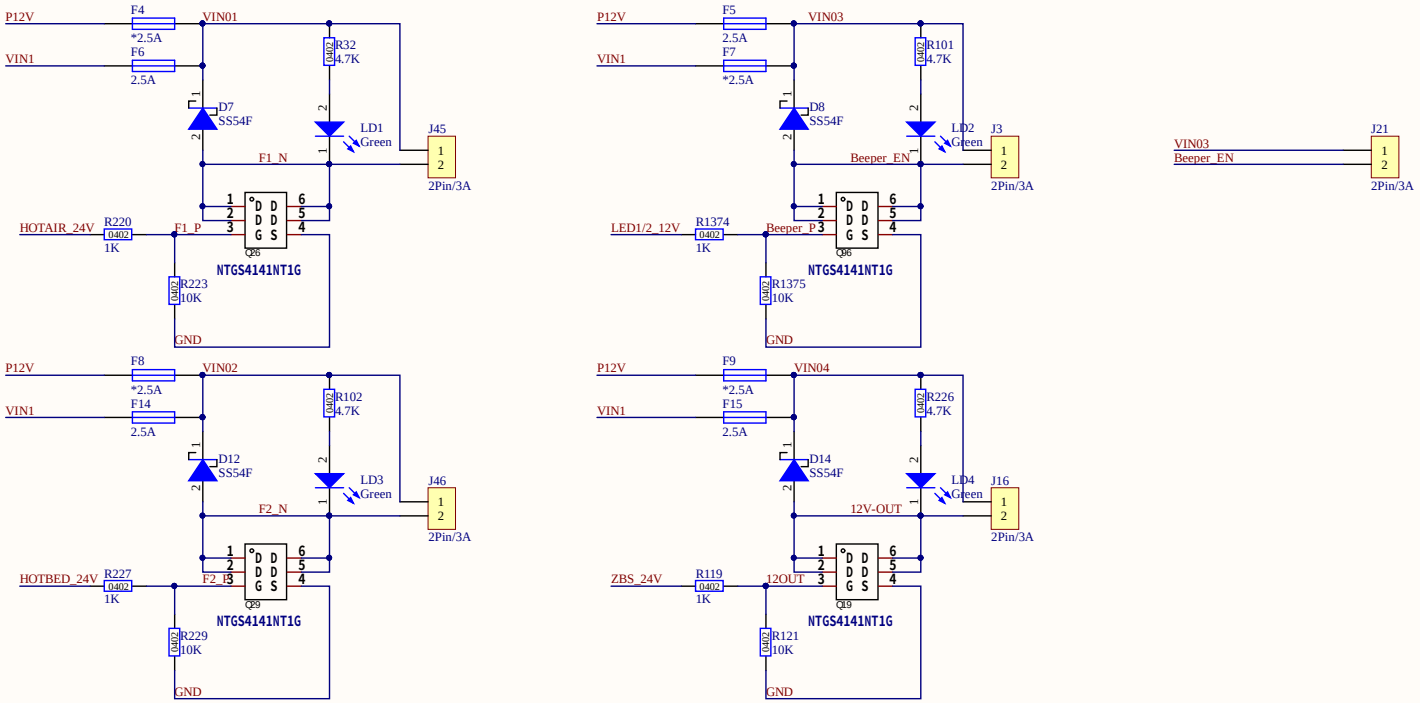

Sprinkler Heater

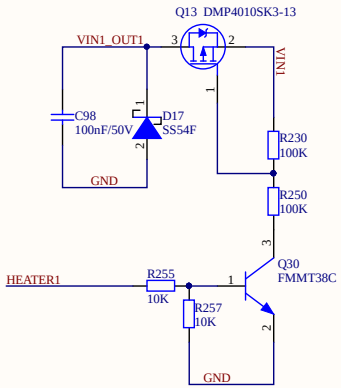

Project	5.04.51805A02.PrjPcb		
File	5.04.51805A02_STMFAN&RGB.SchDoc		
Comments			
Page	Sheet 12 of 21	Size	A3

MOTOR

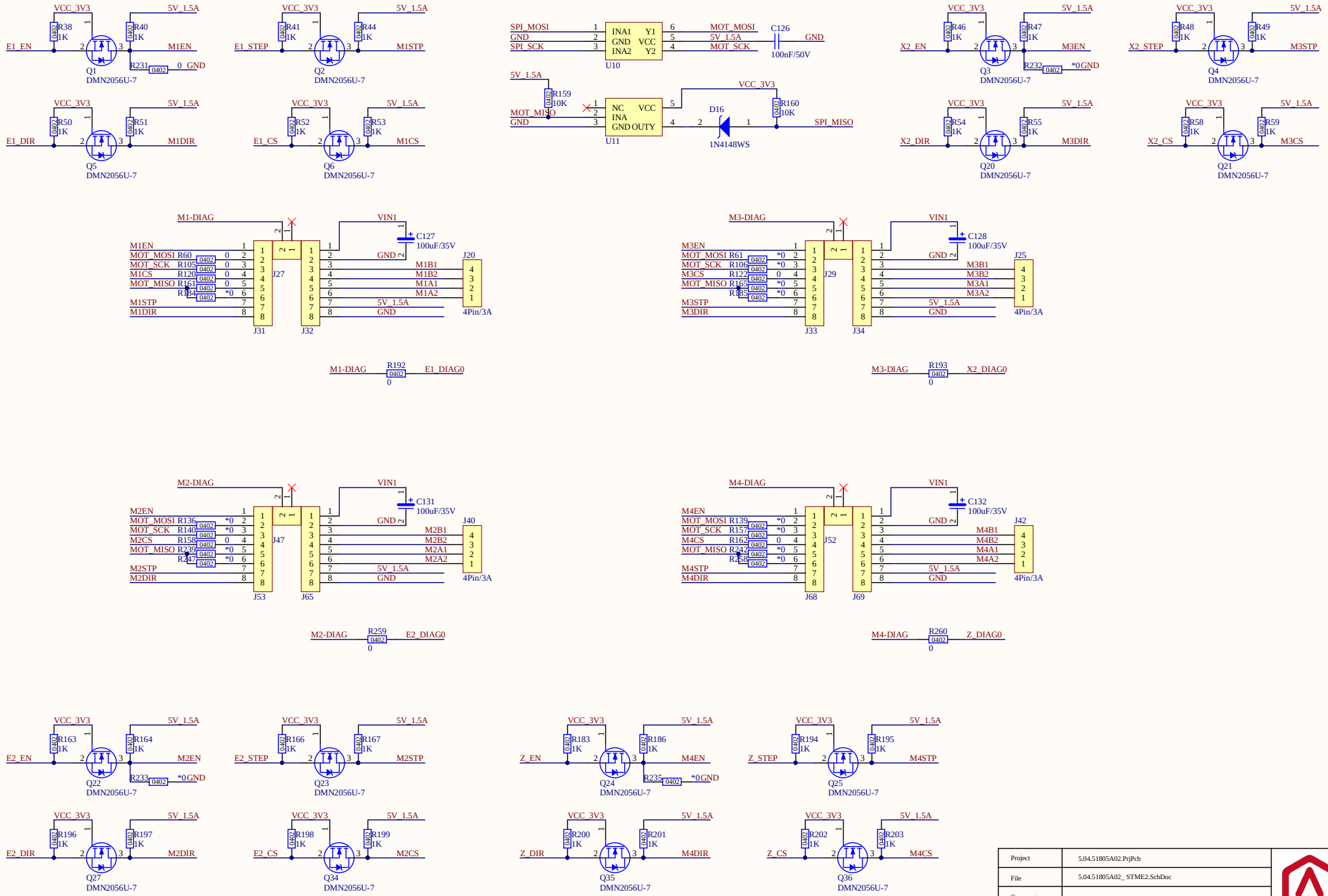

Project	5.04.51805A02.PrjPcb		
File	5.04.51805A02_ STME2.SchDoc		
Comments			
Page	Sheet 13 of 21	Size	A3

XDRIVER

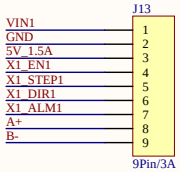

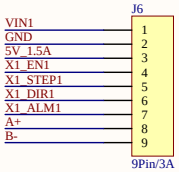

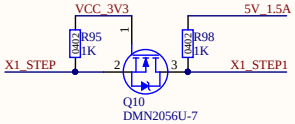

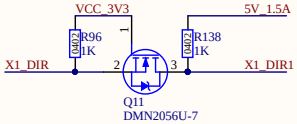

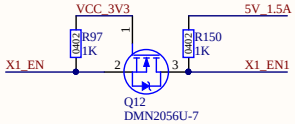

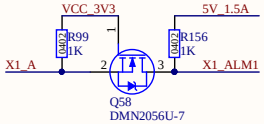

Project	5.04.51805A02.PrjPcb		
File	5.04.51805A02_ STMX1.SchDoc		
Comments			
Page	Sheet 14 of 21	Size	A3

YDRIVER

Project	5.04.51805A02.PrjPcb		
File	5.04.51805A02_ STMY1.SchDoc		
Comments			
Page	Sheet 15 of 21	Size	A3

Lighting

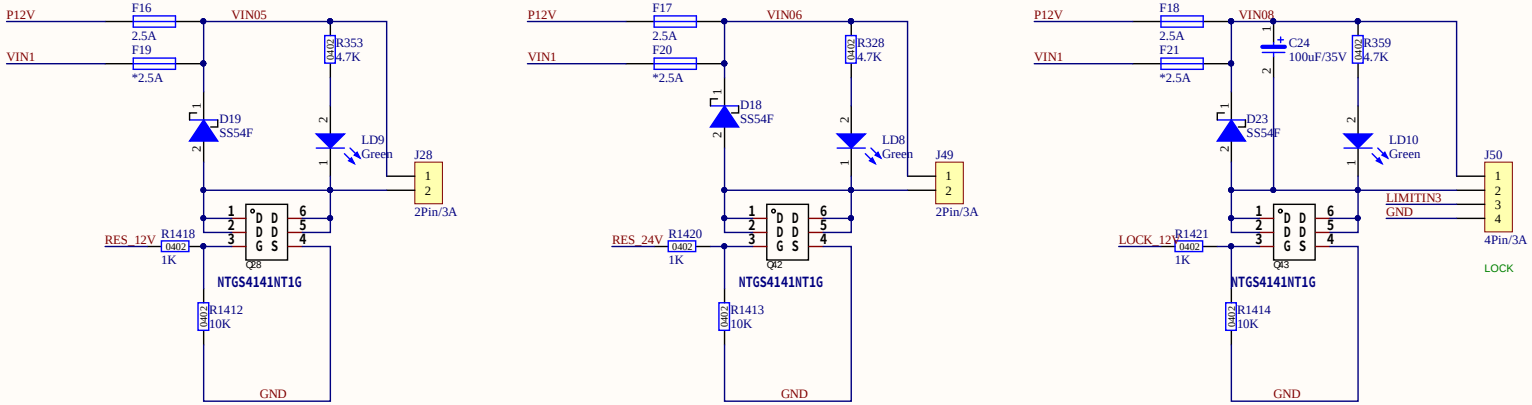

Motor STOP

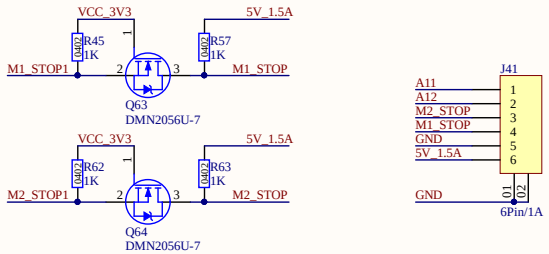

THERMISTOR

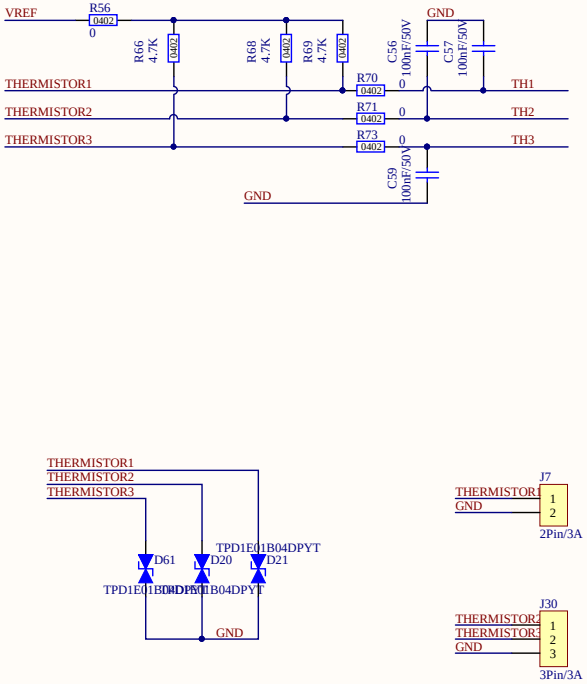

To Sprinkler

OUT

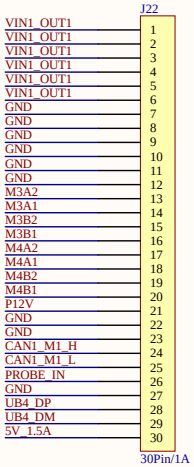

SERVO

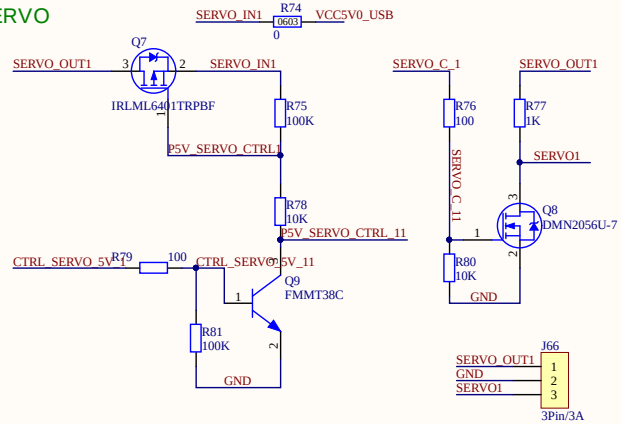

Project	5.04.51805A02.PrjPcb		
File	5.04.51805A02_STMIOPORT.SchDoc		
Comments			
Page	Sheet 16 of 21	Size	A3

MCU

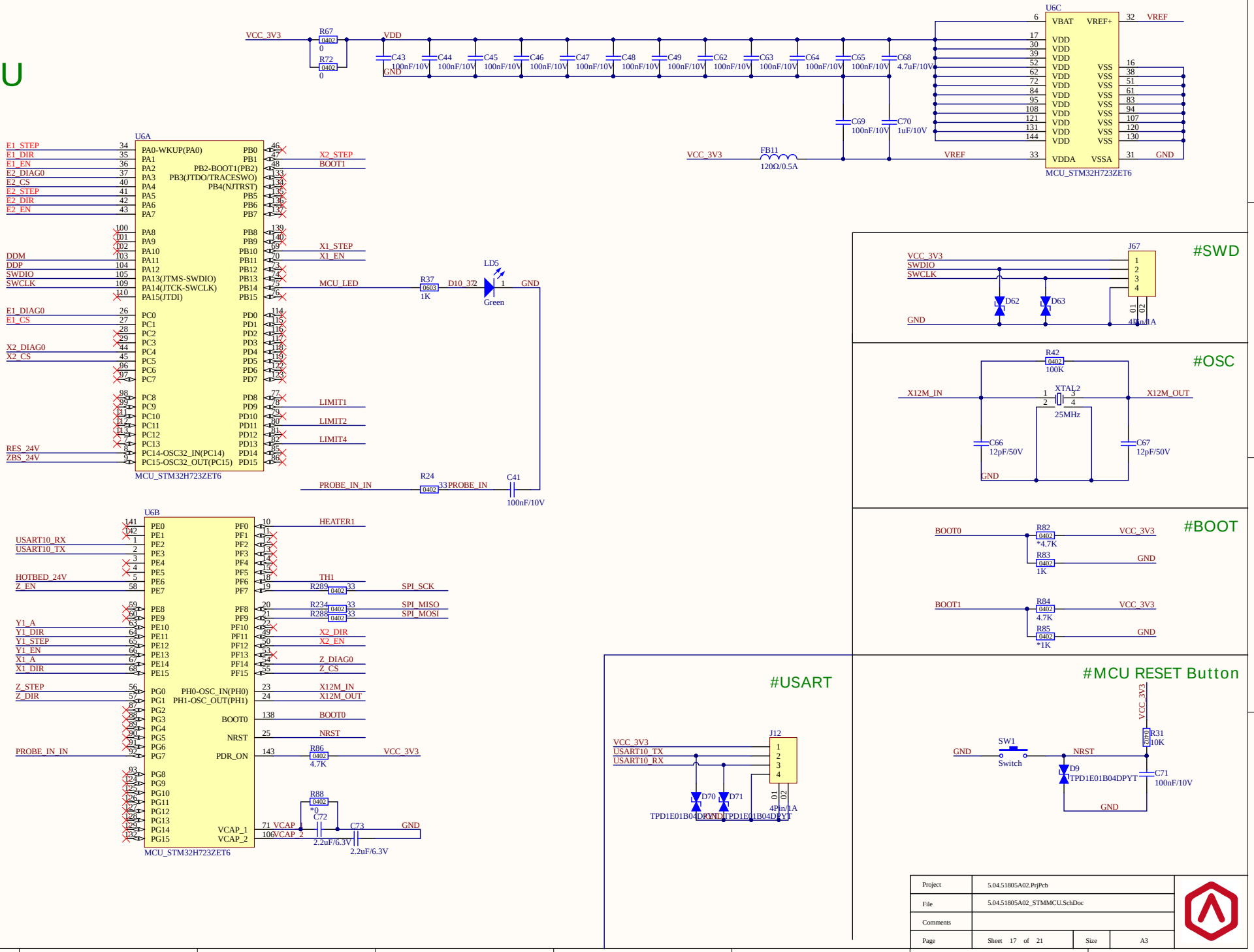

Project	5.04.51805A02.PrjPcb		
File	5.04.51805A02_STMMCU.SchDoc		
Comments			
Page	Sheet 17 of 21	Size	A3

Power IN

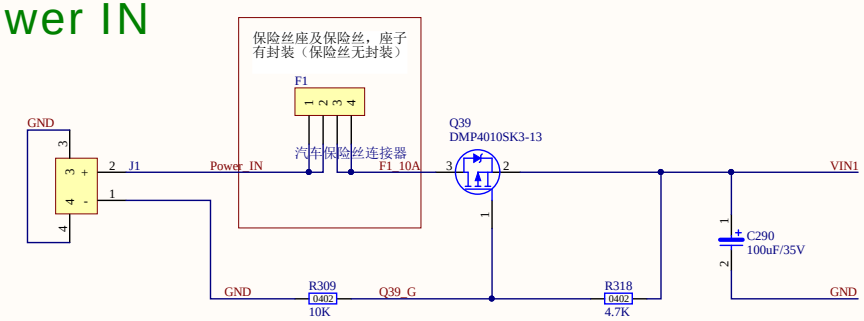

Open Holes

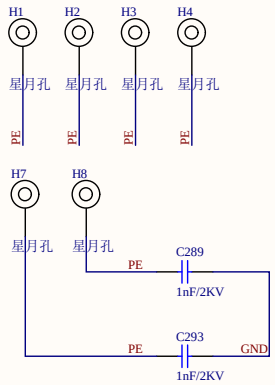

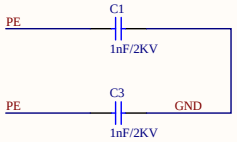

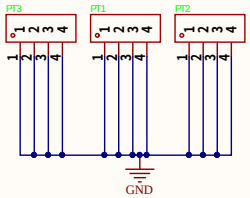

P5V

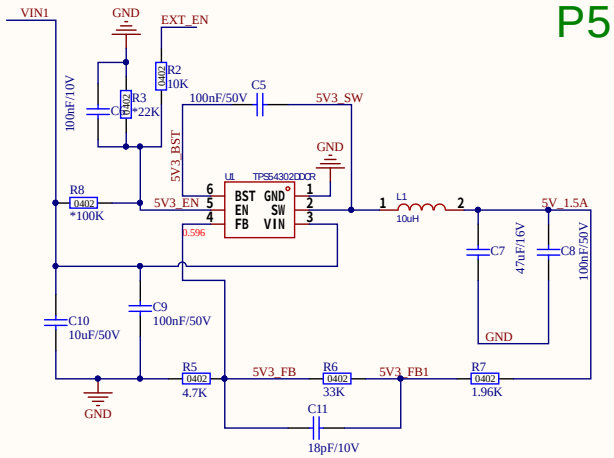

P12V

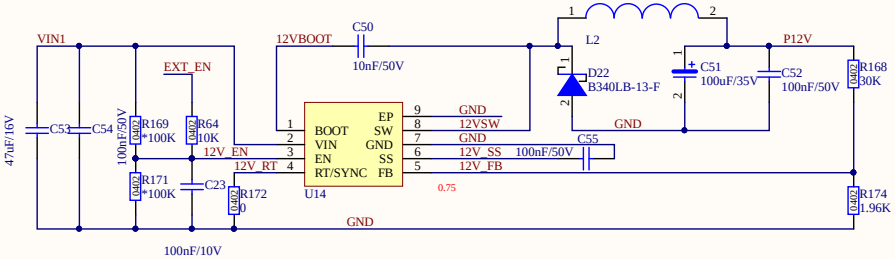

3V3

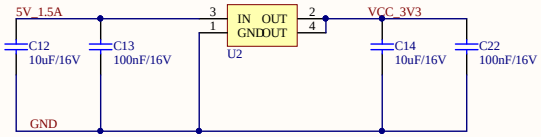

Project	5.04.51805A02.PrjPcb		
File	5.04.51805A02_STMPower.SchDoc		
Comments			
Page	Sheet 18 of 21	Size	A3

DC_MOTOR1

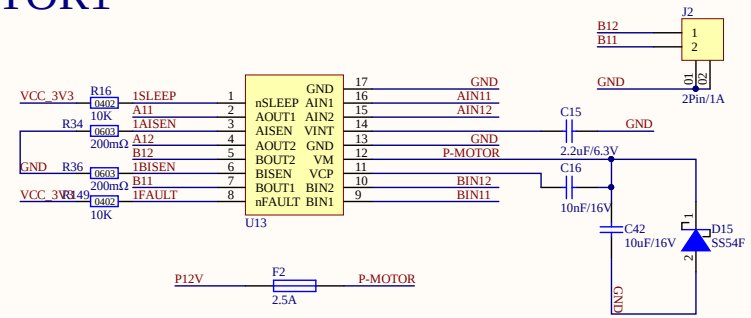

RKFAN

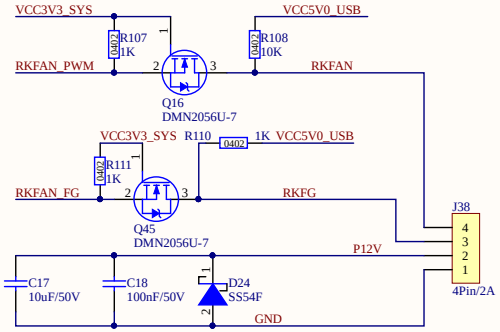

FAN1

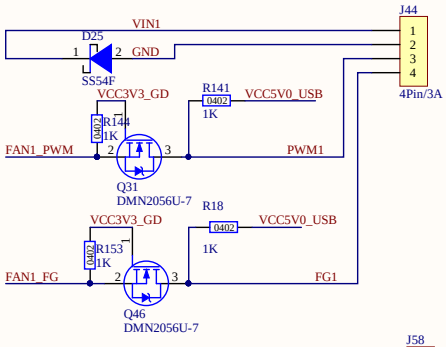

FAN2

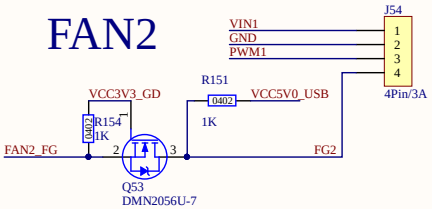

FAN3

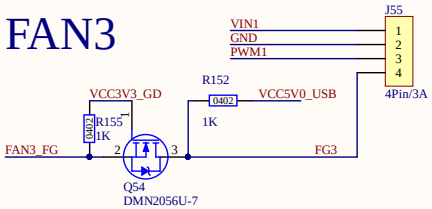

FAN7

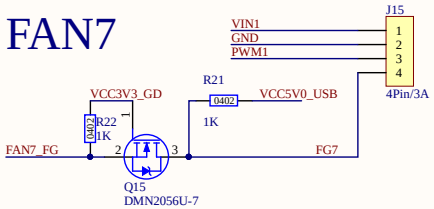

FAN4

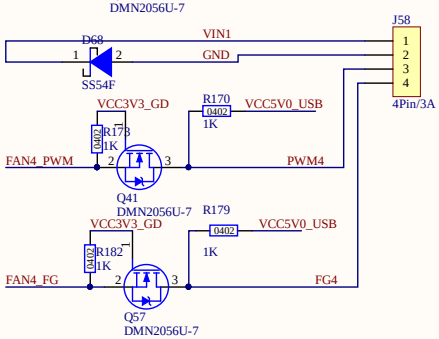

FAN5

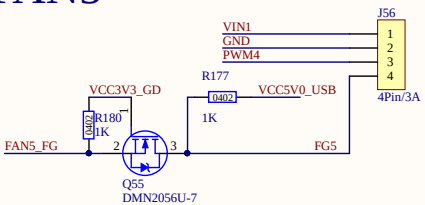

FAN6

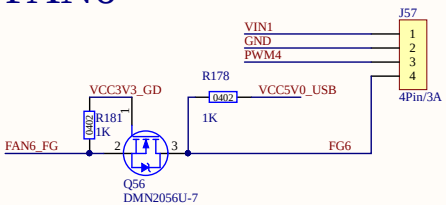

FAN8

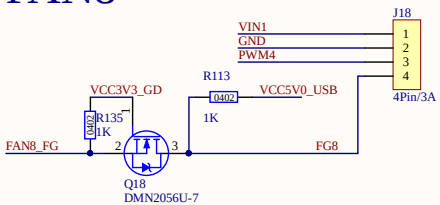

FAN9

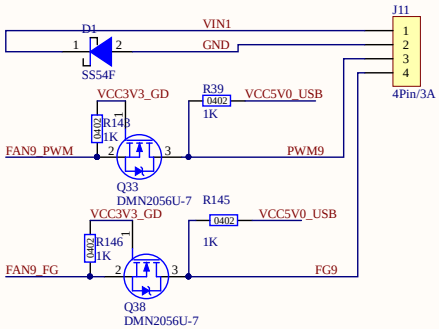

FAN10

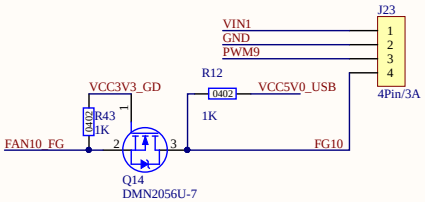

FAN11

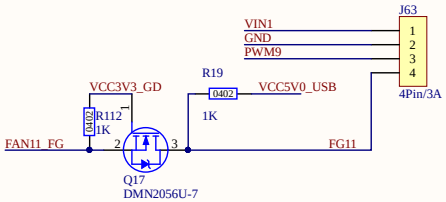

FAN12

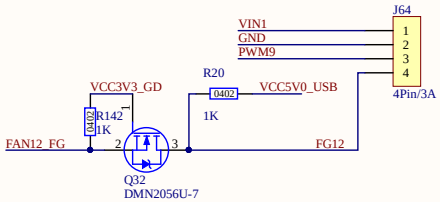

Project	5.04.51805A02.PrjPcb		
File	5.04.51805A02_STMSch.SchDoc		
Comments			
Page	Sheet 19 of 21	Size	A3

FAN

FAN13

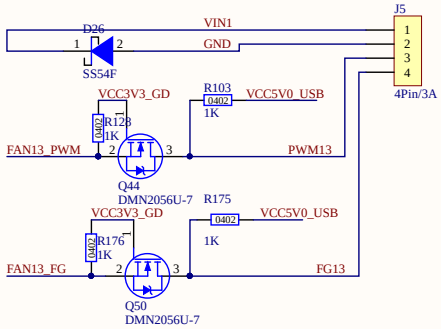

FAN14

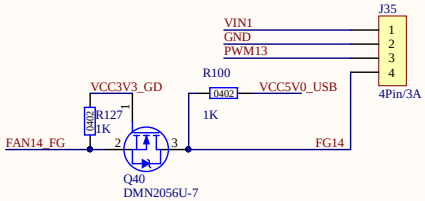

LIMIT_IN

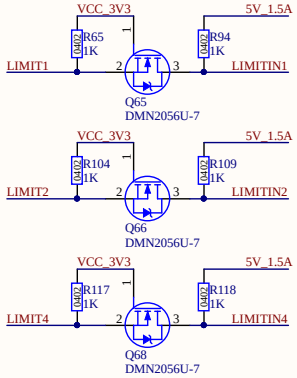

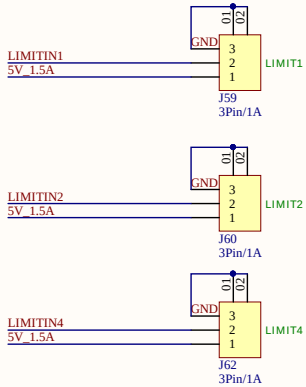

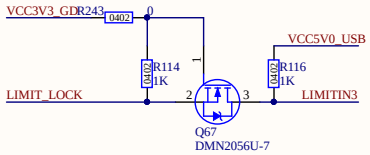

RS485

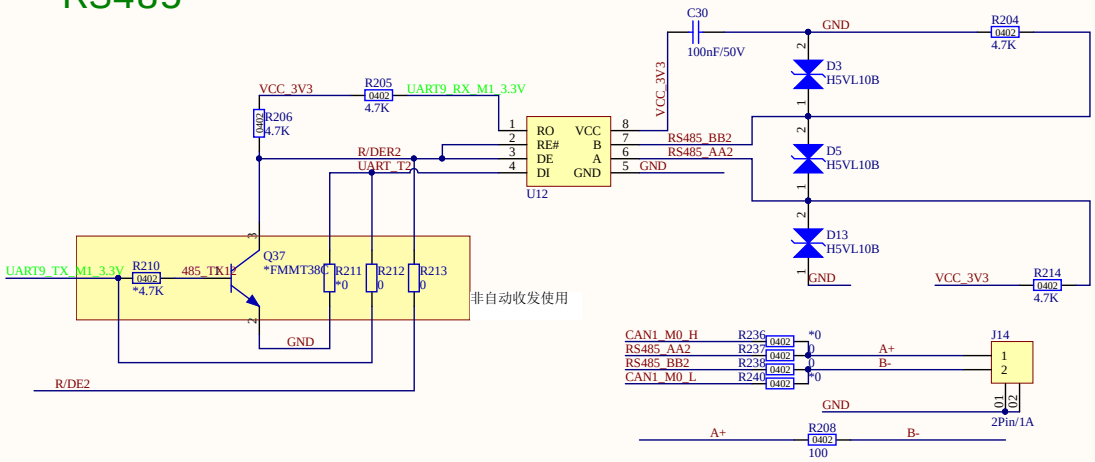

CAN

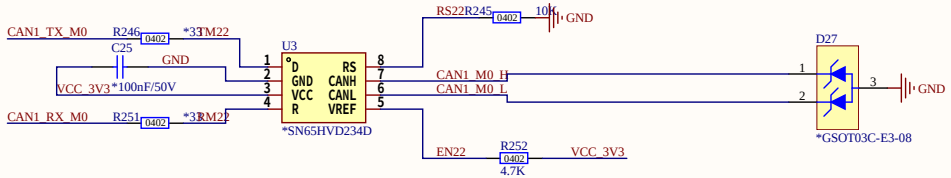

Project	5.04.51805A02.PrjPcb		
File	5.04.51805A02_STMUSB.SchDoc		
Comments			
Page	Sheet 20 of 21	Size	A3

ChangeList

Revision	ChangeItems	Date	Revision	ChangeItems	Date
A01	初始版本	2025/10/31			
A02	RK+STM改为RK+STM+GD	2026/01/28			