Ref No. JL/0226/50389
Date: 05/03/2026

To,
CRPL Infra Private Limited
Land Survey No 839840, SADATPURA DETROJ TO VITHALAPUR ROAD, TAL: Detroj Rampura, Sadatpura, Ahmedabad
Gujarat 382120
India

Kind Attn : Mukesh Kumar

Subject : Your requirement of CPCB IV+ COMPLIANT SILENT TYPE 400 kVA DG set.

Dear Sir,

We thankfully acknowledge the receipt of your most valued enquiry and with reference to our telecon on the same, we take pleasure in enclosing herewith the following, which shall form part of our quotation, for your kind consideration.

Annexure – I : Corporate Profile

Annexure – II : Commercial Terms

Annexure - III : Price Schedule (Last Sheet)

Enclosed : Product Specification Sheet

We trust, you will find our offer in line with your requirement and we look forward to receive your most valued order.

Thanking and assuring you of our prompt attention at all times.

Yours faithfully,

JAKSON LIMITED

ANNEXURE-I

JAKSON GROUP - AN OVERVIEW

With more than 7 decades of presence, Jakson Group is a leading diversified Energy Solutions company which offers end to end solutions right from concept to commissioning through diverse strategic business units ranging from Distributed Energy, Solar, EPC to IPP. Over the years, the company has gained longstanding expertise in the Energy Industry - having diversified from a Diesel Generator Manufacturing Organization into an integrated Energy Solutions Company with extensive presence throughout India including 3 manufacturing facilities equipped with state of the art machinery, 5 Independent Solar Power Plants, 40 Sales Offices and a wide network of channel partners and dealers. Jakson is headquartered in Noida, Uttar Pradesh and has a workforce of over 2200 talented people and an annual revenue exceeding 2500 INR Crores. The company also has business interests in Singapore, Dubai, Bangladesh, Nepal and the African Sub-Continent.

Business Units & Product Offerings:

1) DISTRIBUTED ENERGY

A) <u>Silent Diesel Gensets</u>

Ourwidebaseofover40,000customersandunmatchedproductportfolioofdiesel generators,rangefrom7.5KVAto3750KVA. We produce over 10,000 gensets annually through 2 of our worldclassmanufacturingplantswithbest-in-classmachineryandatrulyglobalapproachtomanufacturingthatensuresthehighestquality for its customers. We specialize in the area of providing turn key solutions which includes end to end captive power solutions for green field projects, designing of power house, supply, installation, testing and commissioning of DG sets and associated works by providing a single window service to our valued customers.

B) <u>Solar Roof Top</u>

Jakson is one of India's leading providers of turnkey solar rooftop services having installed more than 90 MW projects across the country. Catering to the needs of a variety of industrial, commercial and residential users, our services encompass both standardized as well as tailor-made rooftop solutions ranging from a few kilowatts to large utility scale rooftop installations.

C) Energy Storage Solutions

Supporting the "Aatmanirbhar Bharat" mission of the Prime Minister and our commitment towards mitigating climate change, we have taken the lead in developing a Battery Energy Storage System (BESS) which generates carbon-free power, contemporarily designed to suit all segments and enables uninterrupted power supply while significantly reducing costs. Equipped with a hybrid inverter, lithium ion batteries and smart energy systems, it combines the use of grid power, Solar and DG (Optional), and is scalable to any type of battery as well as to a new energy platform. Its modular construction makes it easy to transport and install while fast-charge capability and low-system energy consumption makes it practical and user-friendly.

D) Defence Solutions

In a short span of few years, Jakson has achieved the capability to develop high-end products complying with JSS-55555, CQAL-640 and EMI/EMC standards for military & Defence applications. It has an in-house prototyping shop, R&D facility and a NABL certified testing facility. We are also a proud member of the Society of Indian Defence Manufacturers (SIDM). We manufacture Mil-grade DG Sets, Power Shelters/Power Packs, and GPU & APU meeting Mil Standards.

2) SOLAR MODULES & PRODUCTS

Jakson ranks amongst the top 10 solar power companies in India with a state-of-the-art module manufacturing facility at Greater Noida, India, having an annual manufacturing capacity of 500 MW being scaled to 1 GW shortly. This Unit comprises of manufacture and sales of Solar PV modules, Module Mounting Structures, Solar Power Packs and other innovative solar products and solutions.

3) EPC-ELECTRICAL PROCUREMENT & CONSTRUCTION

Jakson provides turnkey Engineering, Procurement and Construction (EPC) services for land based solar power plants, rural and urban electrification, electrical substations and transmission, building electrification for industries, data centres, hospitals, metro electrification and distribution franchisees. We have executed over 1GW of solar EPC projects across India and overseas. We have completed 132KV & 220KV substations and transmission lines across India. We have executed prestigious projects such as Rashtrapati Bhawan, Indian Railways, Metro electrification apart from others. The EPC Business is expanding geographically in Africa, Middle-East, Nepal and Bangladesh.

4) IPP-INDEPENDENT POWER PRODUCERS

The Solar IPP Business Unit is focussed on setting up land based solar power plants which sell power to State & Central utilities under long term Power Purchase Agreements (PPAs). The Company currently has a solar IPP portfolio of 300 MW with 60 MW of operational plants in Rajasthan and Uttar Pradesh. The company is setting up another 220 MW of land based solar power plants in the state of Assam and Uttar Pradesh.

JAKSON

Generating Sets

01 GENSET MANUFACTURING

- State-of-the-art manufacturing facilities in Kalsar, Gujarat & Kathua, Jammu
- Annual capacity of 20000+ Gensets & 22000+ Enclosures

02 DIESEL GENERATING SETS

- LHP - 7.5 to 160 KVA
- MHP - 180 to 500 KVA
- HHP - 600 to 3750KVA

03 GAS GENERATING SETS

- Up to 2000 KVA

04 DIESEL & GAS POWER PROJECTS

- Turnkey diesel and gas power plant projects

JAKSON

Solar Rooftop

Rooftop solar power plants are increasingly gaining popularity across industrial, commercial and residential users due to their relatively lower cost of investments and lesser complexities involved in setting up a plant. With a typical break-even period of 4-5 years, customers can enjoy free electricity for several years from their captive rooftop plants. In addition to reduced dependence on grid power, any excess power that is generated, can be fed back into the grid by users.

Jakson is amongst the top solar rooftop EPC players in India with a portfolio exceeding 90+ MW. We possess years of expertise and in-house engineering capabilities to build innovative rooftop solar power plants of all sizes - from a few Kilowatts to Megawatts - depending on customer requirements. As a leading energy and engineering soutions company. Jakson offers a wide range of products and services that help customers effectively meet their energy needs in a safe and sustainable manner.

Scope of Services

- Site Survey
- Design & Engineering
- Equipment Supply
- Installation & Commissioning
- Performance Testing
- Operation & Maintenance

Key Features

- Warranty up to 10 years
- Faster Return on Investment
- Actual PR to Guaranteed PR more than 100%
- Web based monitoring
- Power backup for non-sunny days
- All solutions under one roof

JAKSON

Our Rooftop Solutions

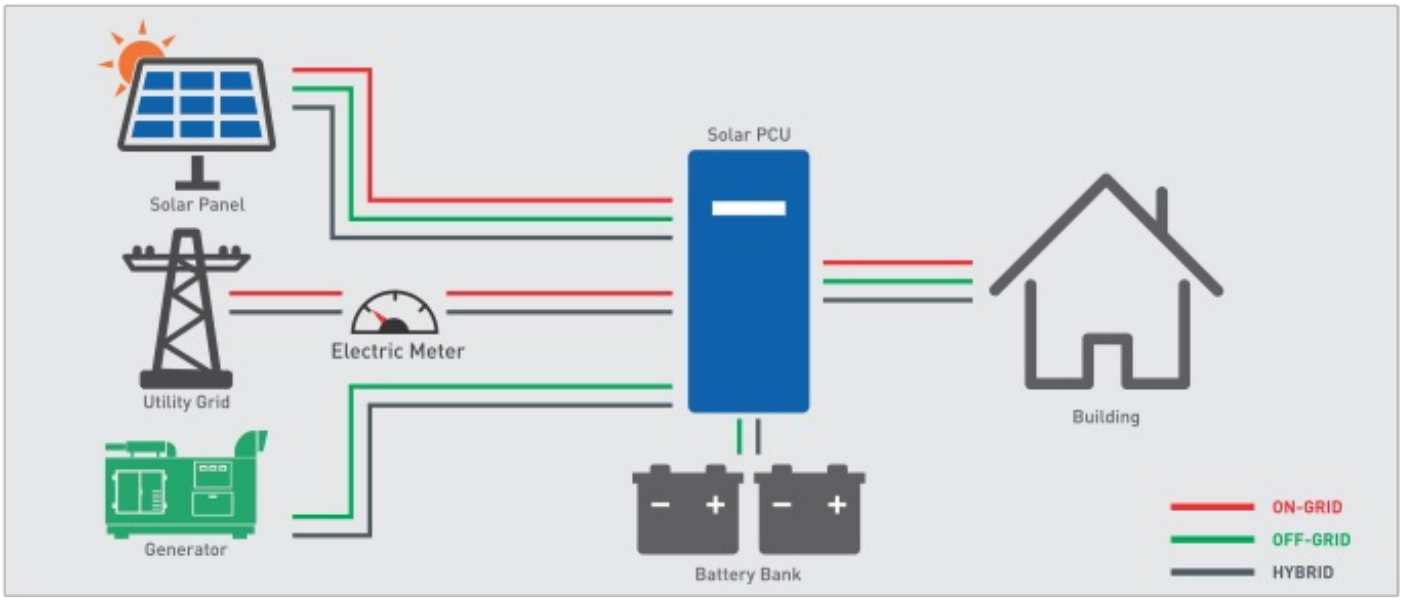

On-Grid solutions with net/gross metering

- Direct power - sun to home
- Utility grid connected
- Saves money - net metering
- Generation time 6-8 hrs

Off-Grid solutions for remote application

- Battery bank for storing energy
- Energy self sufficiency
- Reliable systems 24x7

Hybrid solutions for power deficit areas

- Compatible with generator
- Grid synchronisation
- Store and sell power in case of surplus production

Reference Projects

Government Buildings
508 KW at President's Estate, Delhi, India

Airports
600 KW at Varanasi Airport, UP, India

Industries
700 KW at PTC Industries, UP, India

Metro Stations
250 KW at DMRC, Delhi, India

Educational Institutes
1 MW at MDU University, Haryana, India

Stadiums
400 KW at Yamuna Sports Complex, Delhi, India

JAKSON

Annexure II: Commercial Terms

1	**VALID UPTO**	Mar 31, 2026
2	**FREIGHT**	Included
3	**GST**	Excluded 18%
4	**DISPATCH**	2 weeks from the date of receipt of full payment.
5	**TERMS OF PAYMENTS**	30% advance along with order and balance 70% against readiness / PI prior to dispatch.
6	**STATE TAXES & VARIATIONS**	All state taxes, levies like Octroi, Entry Tax, Municipal/Local Body Tax, Works Contract Tax etc. and statutory variations shall be to Purchaser's account.
7	**WARRANTY**	The components of the DG Set stand guarantee/ warranty of its respective manufacturer for a period of 18 months from the date of dispatch or 12 months/5000 hours from the date of commissioning, whichever happens earlier? However engine & alternator stand guarantee/warranty of its manufacturer for a period of 2 years/5000 hours, whichever happens earlier. Defects rising due to faulty installation, and/or commissioning, misuse, faulty storage and/or handling, improper maintenance, normal wear-tear and damages caused due to accidents are specifically excluded. Parts found defective during guarantee period will be replaced or repaired at out discretion. Parts shall be sent to us freight paid basis and the same shall be returned after rectification or replacement on freight to pay basis. This warranty is not a free service contract. We shall not be liable for any direct, indirect or consequential losses or damages of any type whatsoever.
8	**GENERAL**	All orders are subject to our acceptance in writing. All disputes are subject to Delhi jurisdiction only. Offer is subject to no claim for damages incidental and / or consequential. Offer is subject to general terms and conditions of sales. Insurance shall to purchaser's account and shall be arranged by purchaser. Waybill if applicable-Shall be arranged by purchaser. ARBITRATION: All disputes arising out of an order/ contract against this quotation, the same will be referred to sole arbitrator named by the seller as per the Arbitration and Conciliation Act, 1996.
9	**INSTALLATION & COMISSIONING**	The offer is for supply of D.G. Set only. Once D.G. Set is supplied, installation as per installation guidelines including unloading, shifting, foundation, exhaust piping , fuel piping, power cabling , provision of fuel for testing, battery charging, 4 no. earthing, alternator termination box & changeover etc. shall be done by purchaser. We shall depute our representative for commissioning of the D.G. Set.
10	**ORDER TO BE PLACED ON**	**Jakson Limited** **Kalsar / Phaltan**
11	**SPECIAL CLAUSE**	In the event of order cancellation by purchaser, cancellation charges @ 15% of basic order value shall be applicable for all ratings up to 250KVA and 10% for all ratings above that. GST shall be applicable as per law.

Annexure - III: Price Schedule

S.NO	Description	Qty	Rate/Set (Rs.)	Total Amount (Rs.)
1	Supply of **CPCB IV** Emission complaint **400**, 415 VOLT Silent DG Set comprising of **Cummins** make Engine model **QSM15-G1** coupled to **Stamford** make Alternator mounted on a common base frame, complete with: a) Fuel Tank. b) Batteries and leads c) Silencer d) AVM Pads e) Acoustic Enclosure f) **Panel With Std Manual Panel** g) **First fill of Lube oil**	1	INR 3,500,000.00	**INR 3,500,000.00**
				GRAND TOTAL : INR 3,500,000.00

Note: These prices are governed by Commercial Terms & Conditions given in Annexure - II

Regards,

Alankar Belel

Deputy General Manager – Distributed Energy Business

Landline: +91-033-66335804 | Mobile: +91-9883240930 -Website: www.jakson.com

JAKSON DISTRIBUTED ENERGY

Address: 8W4 at Mani Casadona, 11F, 04, Street Number 372, Action Area 1-2F,

New Town, Kolkata - 700160