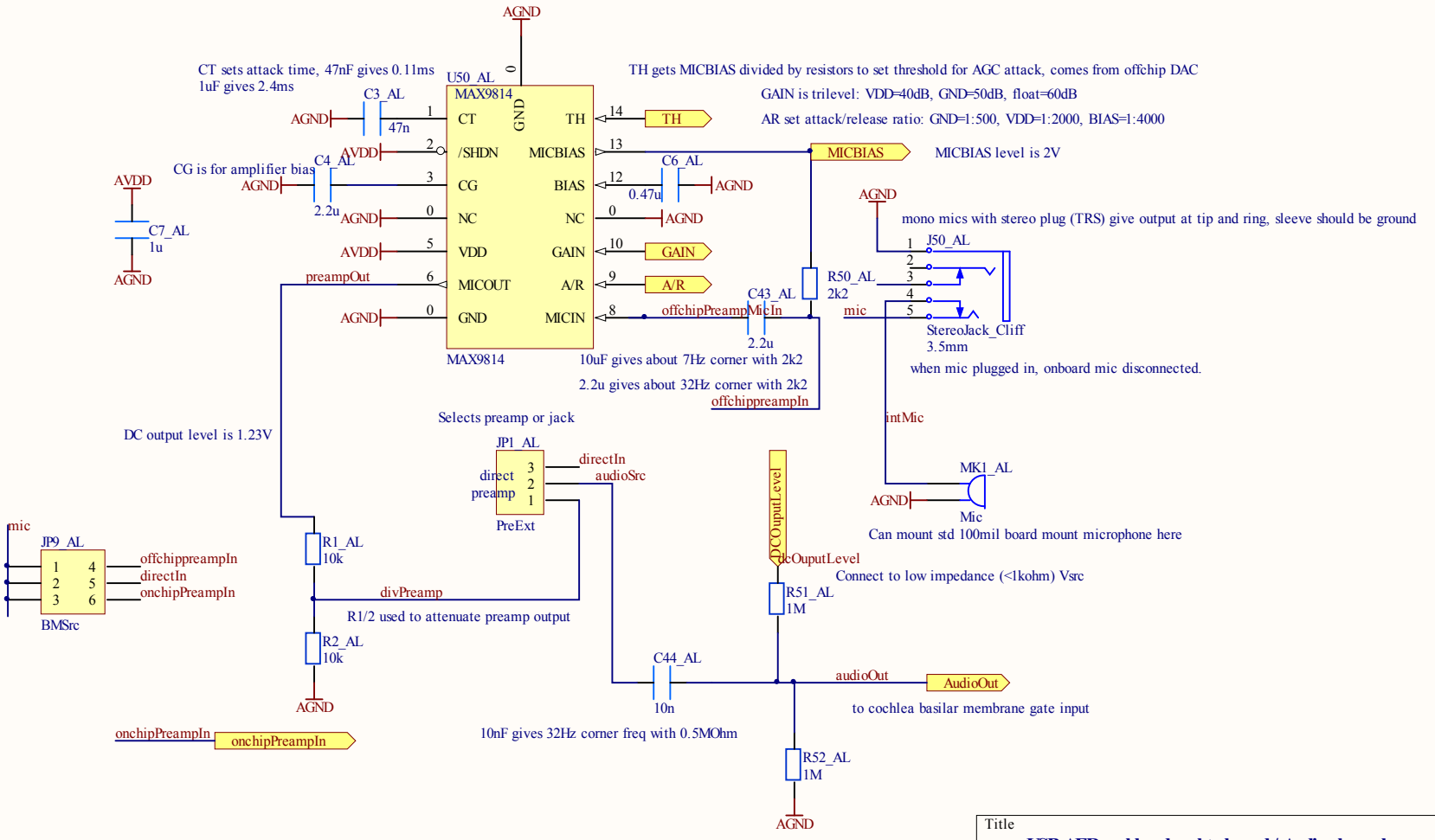

Title	**USB-AER cochlea daughterboard / Audio channel**	
Size: A4	Number: **rev2**	Revision:
Date: 9/15/2011	Sheet of	
File: C:\Users\...\audioAGC_MAX9814_Rev2.SchDoc	Drawn By:	

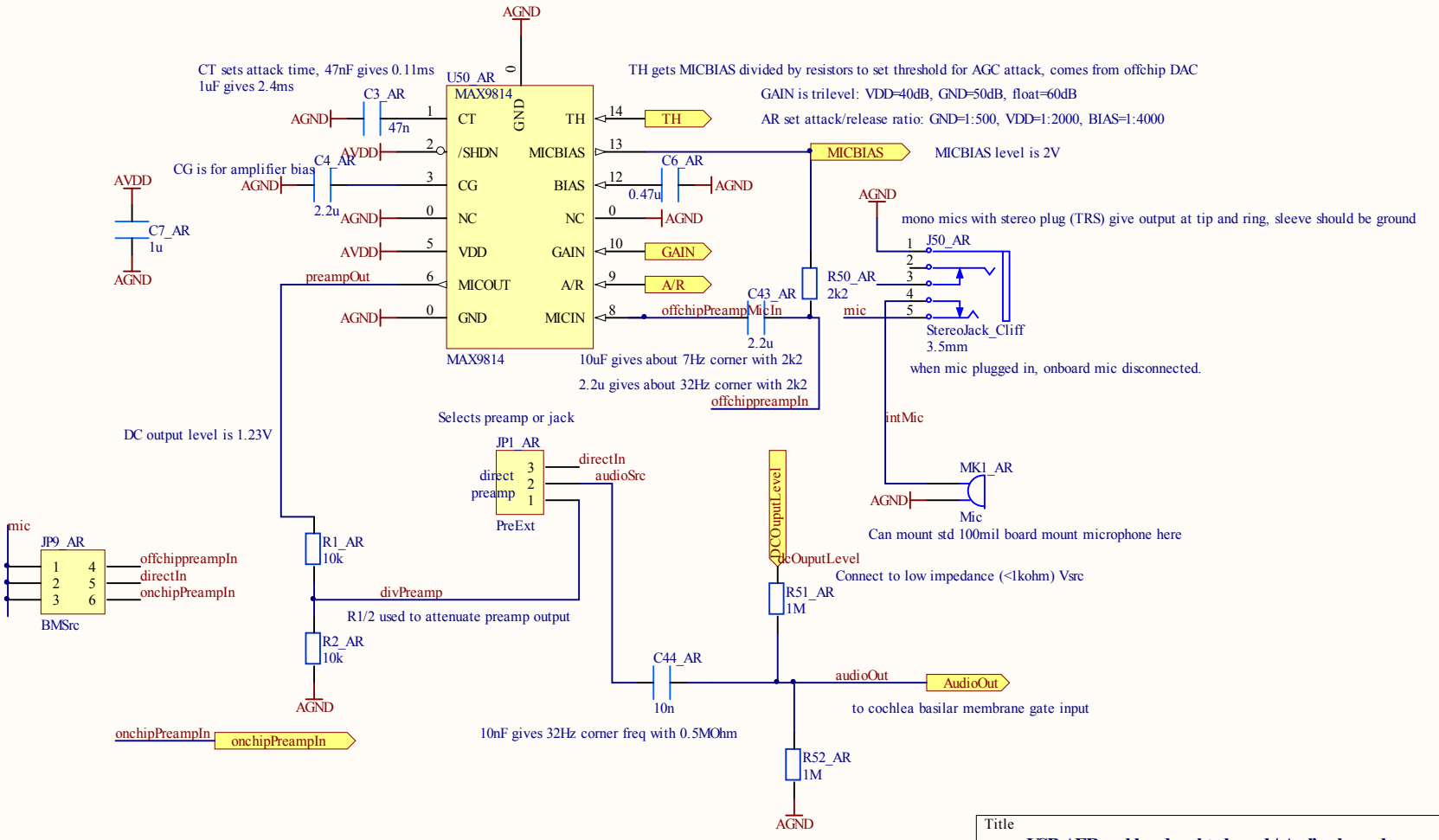

Title	**USB-AER cochlea daughterboard / Audio channel**	
Size: A4	Number: **rev2**	Revision:
Date: 9/15/2011	Sheet of	
File: C:\Users\...\audioAGC_MAX9814_Rev2.SchDoc	Drawn By:	

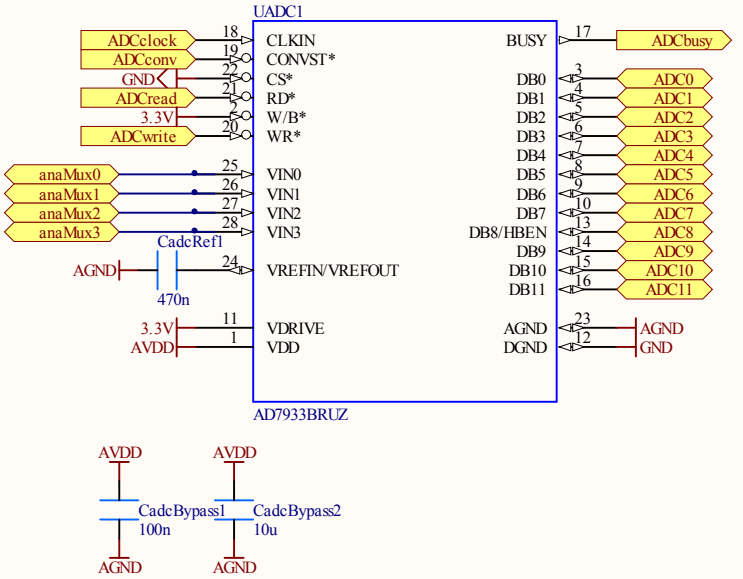

Title	A/D converter for microphone outputs and scanned cochlea outputs of cochleaams1c	
Size: A4	Number:	Revision: rev0
Date: 9/15/2011	Sheet of	
File: C:\Users\...\ADC_AD7933.SchDoc	Drawn By: Raphael Berner	

pin13: Vbpf2x is now BIASDACBufferNbias

pin15:Vbias2x is now Vrefract

pin21: Vbias1x is now NeuronRp

pin16: Vbpf1x is now TH

NeuronVleak, Vioffbpfn, Vterm hooked to OFFCHIP DAC

TODO: ADD RESISITIVE DIVDER TO PREAMP OUTPUT

NEED MORE VDD AND GND HEADERS FOR PINS

TODO: Can remove many digital jumpers since FX2 makes them (FIXED)

what is micbiasL and micbiasR hooked up to?

TODO:Vioffbpfn shorted to onchip bias, needs jumper (FIXED)

Do ResCtrlBits need resistors?

TODO: nReset could go to the FX2, but will not do this since we need DACs to run on this chip

COCHLEA1
SHIH-COCHLEAAMS1C

AL
audioAGC_MAX9814_Rev2.SchDoc

AR
audioAGC_MAX9814_Rev2.SchDoc

GAIN is trilevel: VDD=40dB, GND=50dB, float=60dB

AR set attack/release ratio: GND=1:500, VDD=1:2000, BIAS=1:4000

U_cochleaams1c_CPLDLattice
cochleaams1c_CPLDLattice.SCHDOC

Shih-Chii: cochleaams1c

AMS
PGA121M

BIASGEN & DAC

AER OUT

COCHLEACTRL

CLK SIG

BIASES

SIG SCAN OUT

POWER

BIASGEN/TEST SIG

Title			
COCHLEAAMS1c board with USB-AER			
Size: A2	Number:	Revision:	
Date: 9/15/2011	Sheet of	**S.C. Liu, T. Delbruck**	
File: C:\Users\...\cochleaams1c.SchDoc	Dawn By:		

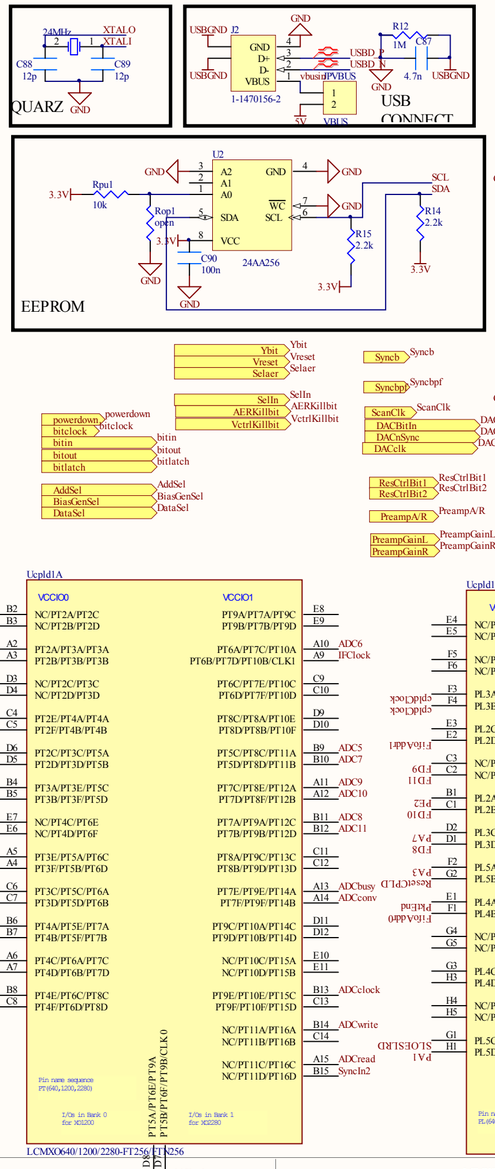

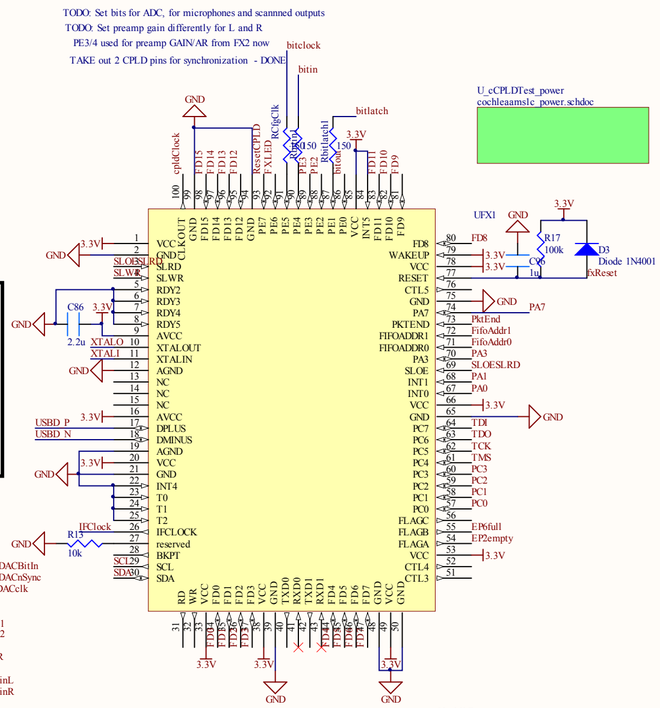

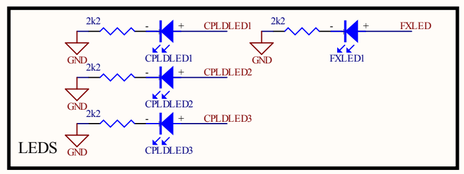

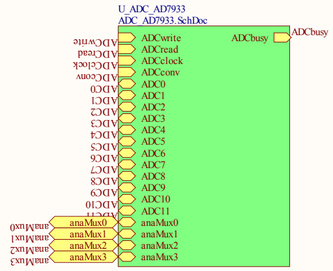

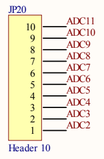

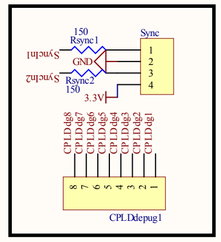

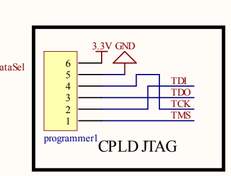

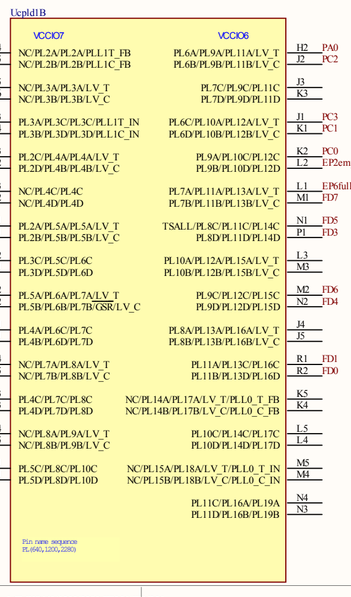

Title	USB2_REV0 CPLD LATTICE board for Cochleaamsle		
Size	Number		Revision
A2	rev 0		
Date:	9/15/2011	Sheet of	
File:	C:\Users\...\cochleaamsle_CPLDLattice.SCHDOC	Drawn By:	

MOUNTING
FOR STANDS
AND TRIPOD

tripodMount1 — tripod
M1 — M3 — M3hole
M2 — M3 — M3hole
M3 — M3 — M3hole
M4 — M3 — M3hole

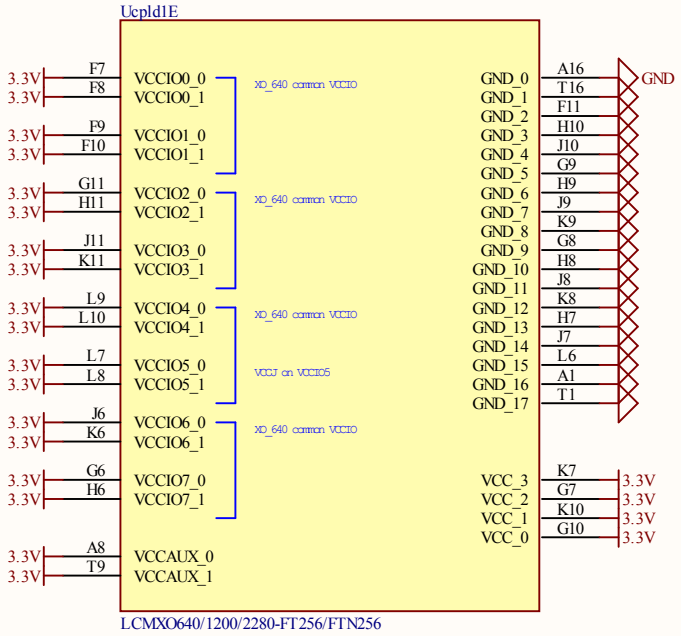

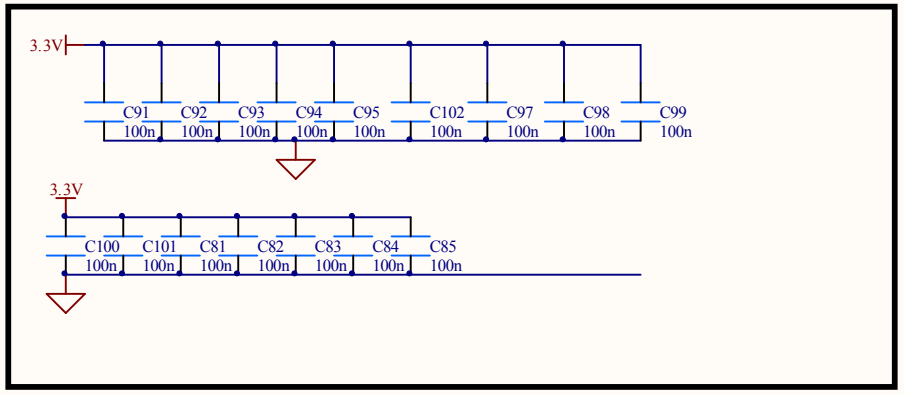

Title: Power for CPLD LATTICE for Cochleaams1c		
Size: A	Number:	Revision:
Date: 9/15/2011		Sheet of
File: C:\Users\..\cochleaams1c_power.schdoc		Drawn By:

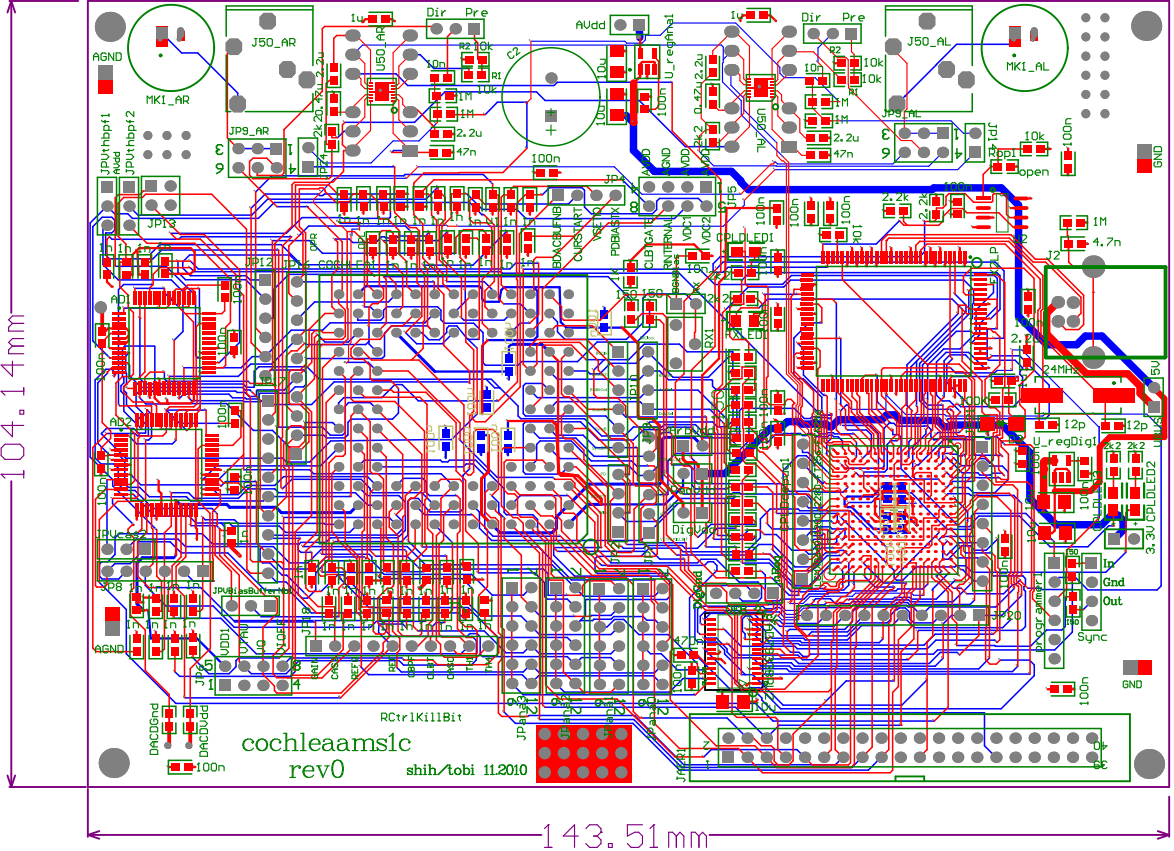

104.14mm
143.51mm
cochleaams1c
rev0
shih/tobi 11.2010
MKI_AR
MKI_AL
J50_AR
J50_AL
AGND
AVdd
GND
RCtrlKillBit
DACDGnd
DACDVdd

Bill of Materials

COCHLEAAMS1B BOARD

Source Data From: cochleaams1c.PrjPCB
Project: cochleaams1c.PrjPCB
Variant: None

Creation Date: 9/15/2011 11:38:10 AM
Print Date: 40801 40801.48494

Footprint	Comment	LibRef	Designator	Description	Quantity
QFP10x10-G52/N	AD5391	AD5391	AD1, AD2	Analog Devices DAC 16 ch, 12 bit	2
CC1608-0603	10n	CapSMT	C1, C44_AL, C44_AR	SMT capacitor	3
CAPPR5-13x25	2200uF	Cap Pol1	C2	Polarized Capacitor (Radial)	1
CC1608-0603	47n	CapSMT	C3_AL, C3_AR	SMT capacitor	2
CC1608-0603	2.2u	CapSMT	C4_AL, C4_AR, C43_AL, C43_AR, C86	SMT capacitor	5
CC1608-0603	1n	CapSMT	C5, C14, C15, C16, C17, C18, C23, C24, C25, C26, C27, C28, C29, C30, C31, C32, C33, C34, C35, C36, C37, C38, C39, C40, C41, C42, C47, C48, C49, C50, C51, C52, C53, C54, C55, C56, C57, C58, C59, C60, C61, C62, C63, C64, C65, C66, C67, C68, C69, C70, C71	SMT capacitor	51
CC1608-0603	0.47u	CapSMT	C6_AL, C6_AR	SMT capacitor	2
CC1608-0603	1u	CapSMT	C7_AL, C7_AR, C96	SMT capacitor	3
CC1608-0603	100n	CapSMT	C8, C10, C13, C19, C20, C21, C22, C81, C82, C83, C84, C85, C90, C91, C92, C93, C94, C95, C97, C98, C99, C100, C101, C102, CadcBypass1, CArbV1, CArbV2, CAVdd1, CAVdd2, CDVdd1, CDVdd2, CPadV1, CPadV2, CregDig1	SMT capacitor	34
CC3216-1206	10u	CapSMT	C9, C11, C12, CadcBypass2, CoutDig1	SMT capacitor	5
CC1608-0603	4.7n	CapSMT	C87	SMT capacitor	1
CC1608-0603	12p	CapSMT	C88, C89	SMT capacitor	2
CC1608-0603	470n	CapSMT	CadcRef1	SMT capacitor	1
PGA120x13, Extra	SHIH-COCHLEAAMS1C	SHIH-COCHLEAAMS1C	COCHLEA1	MOSIS , PGA121M	1
HDR1X8	Header 8	Header 8	CPLDdepug1, JP21	Header, 8-Pin	2
0805LED	CPLD1	LED	CPLDLED1	LED, SMT 3mm by 1.5mm	1
0805LED	CPLD2	LED	CPLDLED2	LED, SMT 3mm by 1.5mm	1
0805LED	CPLD3	LED	CPLDLED3	LED, SMT 3mm by 1.5mm	1
SMA	Diode 1N4001	Diode 1N4001	D3	1 Amp General Purpose Rectifier	1
0805LED	FX	LED	FXLED1	LED, SMT 3mm by 1.5mm	1
usbMolex	1-1470156-2	1-1470156-2	J2	USB 1.1, Right Angle, Thru-Hole, B Type, Receptacle, 4 Position, Black	1
testPoint	AGND	testPoint	J3, J5		2
testPoint	GND	testPoint	J4, J6		2
JYS35	StereoJack_Cliff	StereoJack_Cliff	J50_AL, J50_AR		2
HDR2X20 with shell	CAVIAR	CAVIAR 40 IDC	JAER1	CAVIAR 40 pin IDC header	1
HDR1X2	ArbVdd	Header 2	JArbVdd1	Header, 2-Pin	1
HDR1X2	AVdd	Header 2	JAVdd1	Header, 2-Pin	1
HDR1X2	DigVdd	Header 2	JDVdd1	Header, 2-Pin	1
HDR1X3	PreExt	Header 3	JP1_AL, JP1_AR	Header, 3-Pin	2
HDR1X4	Header 4	Header 4	JP2, JP3, JP4, JPAER1, Sync	Header, 4-Pin	5
HDR2X4_CEN	Header 4X2A	Header 4X2A	JP5, JP6	Header, 4-Pin, Dual row	2
HDR1X6	Header 6	Header 6	JP7, JP8, JP10	Header, 6-Pin	3
HDR2X3_CEN	BMSrc	Header 3X2A	JP9_AL, JP9_AR	Header, 3-Pin, Dual row	2
HDR1X6	BMBiases	Header 6	JP12	Header, 6-Pin	1
HDR2X2	DAC2Use	Header 2X2	JP13	Header, 2-Pin, Dual row	1
HDR1X2	Header 2 HDR	Header 2 HDR	JP14, JP15, JP24	Header, 2-Pin	3
HDR1X10	Header 10	Header 10	JP16, JP17, JP18, JP20	Header, 10-Pin	4
HDR2X6_CEN	Header 6X2A	Header 6X2A	JPana0, JPana1, JPana2, JPana3	Header, 6-Pin, Dual row	4
Header2	3.3V	header2	JPLogVdd		1
HDR1X3	Header 3	Header 3	JPVBiasBufferNb1, JPVcas2, JPVthbpf1, JPVthbpf2	Header, 3-Pin	4
HDR1X2	VBUS	Header 2	JPVBUS	Header, 2-Pin	1
HDR1X2	PadVdd	Header 2	JPVdd1	Header, 2-Pin	1
M3Hole	M3hole	M3hole	M1, M2, M3, M4		4
MIC_10mm	Mic	Mic1	MK1_AL, MK1_AR	Microphone	2
HDR1X6		Header 6	programmer1	Header, 6-Pin	1
CR1608-0603	10k	Res	R1_AL, R1_AR, R2_AL, R2_AR		4
C1608-0603	1M	Res3	R12	Resistor	1
C1608-0603	10k	Res3	R13, Rpu1	Resistor	2
C1608-0603	2.2k	Res3	R14	Resistor	1
CR1608-0603	2.2k	Res3	R15	Resistor	1
C1608-0603	100k	Res3	R17	Resistor	1
CR1608-0603	2k2	Res, Res3	R50_AL, R50_AR, ResCPLDLED1, ResCPLDLED2, ResCPLDLED3, ResFXLED1	Resistor	6
CR1608-0603	1M	Res	R51_AL, R51_AR, R52_AL, R52_AR		4
C1608-0603	150	Res3	RAck, RAddSel1, RAerKillbit1, RBiasSel1, Rbitin1, RbitIatch1, RClgClk, RCtrlBit1, RCtrlBit2, RCtrlKillBit, RDataSel1, RScanClk, RSelaer1, RSelIn1, RVreset1, RYbit1	Resistor	16
C1608-0603	1K	Res3	RDtoAGnd1	Resistor	1
C1608-0603	open	Res3	Rop1	Resistor	1
CR1608-0603	150	Res3	Rsync1, Rsync2	Resistor	2
Pot-3265W-3266-Bournes	POT-3265	POT-3265	RXt	potentiometer	1
TripodNut	tripod	TRIPODNUT	tripodMount1	Tripod nut mount	1
SOIC8	24AA256	24AA256	U2	256Kbit Serial PC Bus EEPROM	1
RU-28	AD7933BRUZ	AD7933BRUZ	UADC1		1
ftBGA256	LCMXD640/1200/2280-FT256/FTN256	LCMXD640/1200/2280-FT256/FTN256	Ucpld1		1
R-QFP14x20-G100/X.4N	FX2LP	FX2LP	UFX1	Cypress FX2LP 100 pin	1
SOT23-5	regulator33	regulator33	U_regAna1, U_regDig1	TPS79333DBVR	2
HC49/4H_SMX	24MHz	XTAL	Y1	Crystal Oscillator	1
					221

Approved **Notes**