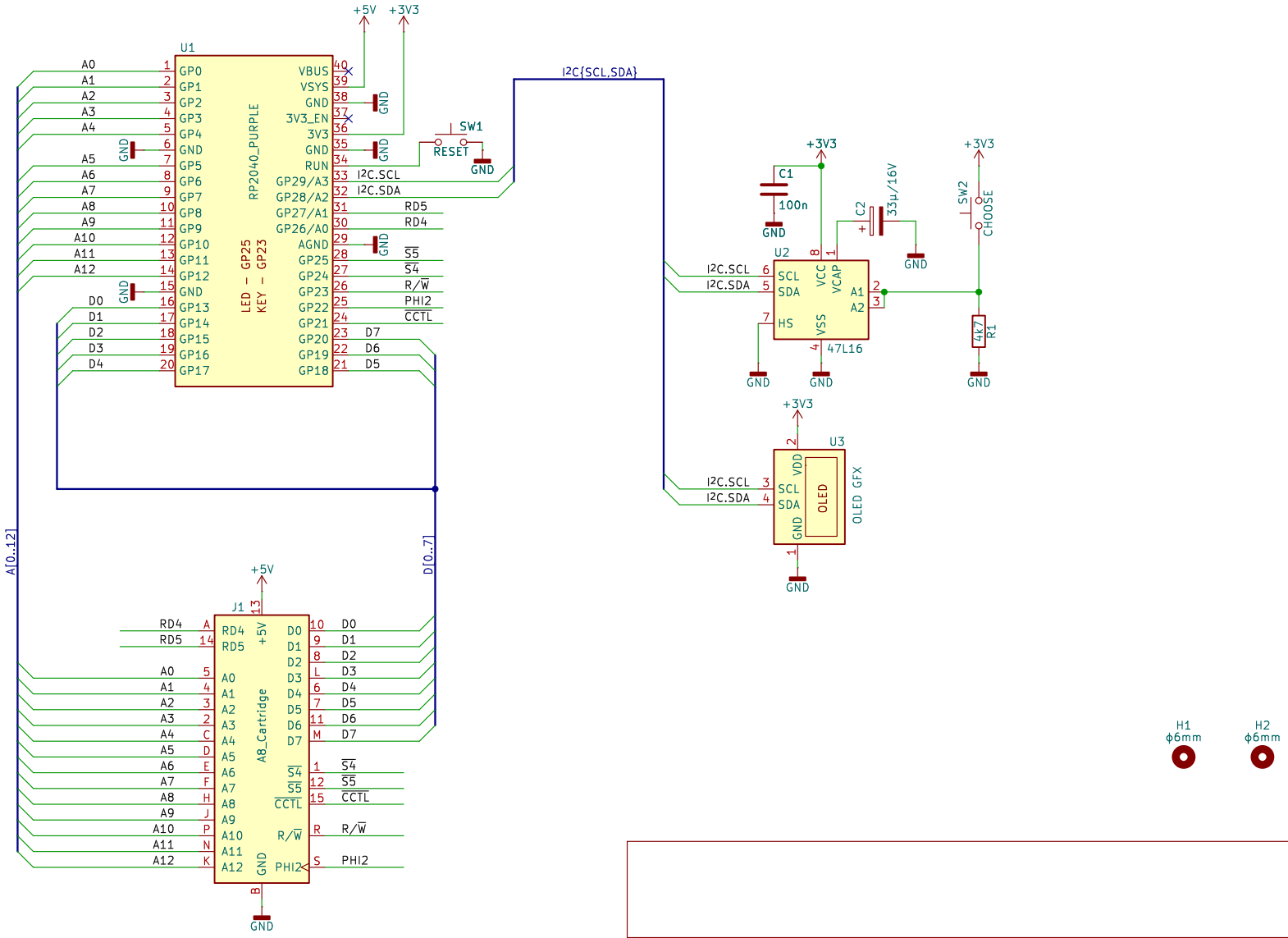

Sheet: /
File: A8PicoCart_plus.kicad_sch

Title: A8PicoCart+

Size: A4	Date: 2025-01-05	**Rev: v1.0**
KiCad E.D.A. 8.0.3		Id: 1/1