# Curiosity PIC32MZ EF 2.0 Development Board Users Guide

## Introduction

The Microchip Technology Curiosity PIC32MZ EF 2.0 Development Board (DM320209) includes an integrated programmer and debugger, which requires no additional hardware to get started. Users can expand functionality through MikroElectronika mikroBUS™ Click™ adapter boards, add Ethernet connectivity with the Microchip PHY Daughter Board, add Wi-Fi® connectivity capability using the Microchip expansions boards, and add audio input and output capability with Microchip audio daughter boards.

With or without expansion boards, the Curiosity PIC32MZ EF 2.0 Development Board provides the freedom to develop a variety of applications, including Bluetooth Audio, CAN, Graphics/UI, Internet of Things (IoT), robotics development, and proof-of-concept designs.

### Curiosity PIC32MZ EF 2.0 Development Board Features

The Curiosity PIC32MZ EF 2.0 Development Board has the following features:

- PIC32MZ2048EFM144, 200 MHz, 2 MB Flash, 512 Kb SRAM
- On-Board debugger (PKoB4)
  - Real time Programming & Debugging
  - Virtual COM port (VCOM)
  - Data Gateway Interface (DGI)
- Two mikroBUS interfaces
- Two X32 Audio interfaces supporting Bluetooth® and Audio
- Ethernet interface
- Graphics interface
- Xplained pro extension compatible interface
- CAN interface
- User buttons
- User LEDs
- 8 MB QSPI memory
- Arduino Uno R3 compatible interface

### Kit Contents

The kit contains one Curiosity PIC32MZ EF 2.0 Development Board (DM320209).

**Note:** If any part is missing from the kit, contact a Microchip sales office for assistance. A list of Microchip offices for sales and service is provided on the last page of this document.

## Curiosity PIC32MZ EF 2.0 Development Board

The Curiosity PIC32MZ EF 2.0 Development Board (DM320209) is shown in the following figure:

© 2019 Microchip Technology Inc.

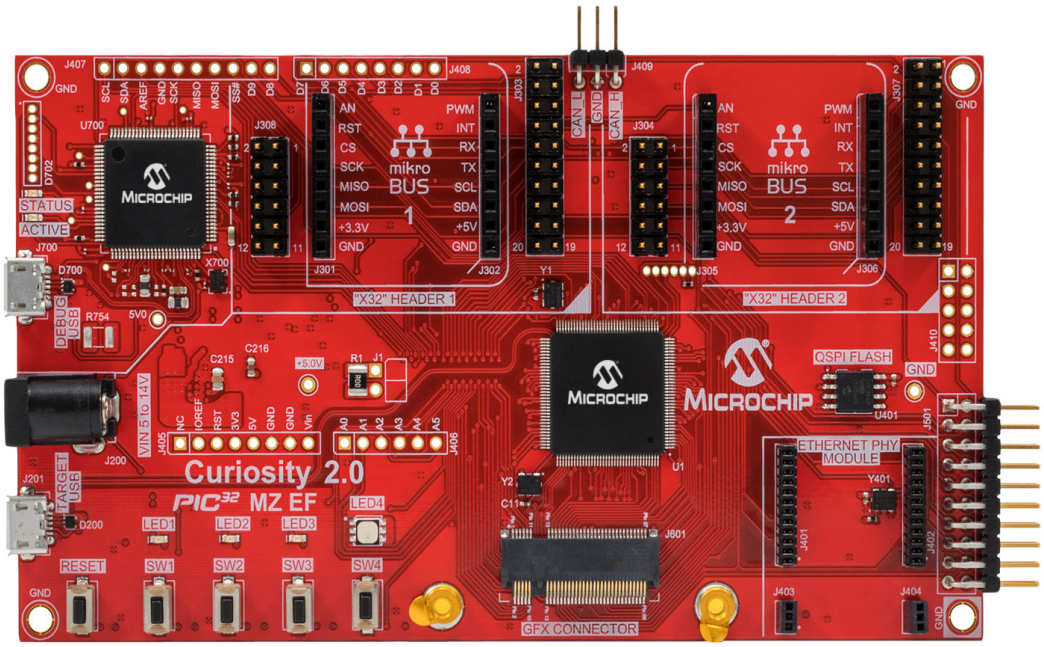
Curiosity 2.0
PIC32 MZ EF
MICROCHIP
mikro BUS 1
mikro BUS 2
"X32" HEADER 1
"X32" HEADER 2
QSPI FLASH
ETHERNET PHY MODULE
GFX CONNECTOR
STATUS
ACTIVE
DEBUG USB
TARGET USB
VIN 5 to 14V
RESET
SW1
SW2
SW3
SW4
LED1
LED2
LED3
LED4

# Table of Contents

Introduction....1
1. Curiosity PIC32MZ EF 2.0 Development Board Features....1
2. Kit Contents....1
Curiosity PIC32MZ EF 2.0 Development Board ....1

1. Development Board Functionality and Features....4
1.1. Board Feature Location....4
1.2. System Block Diagram....5
1.3. Power Block Diagram....5
1.4. PICKit On-Board 4....6
1.5. $I^2C$ Voltage Selection.... 8
1.6. X32 Audio Interface....10
1.7. mikroBUS.... 12
1.8. Control Area Network (CAN) Bus Interface....13
1.9. Ethernet....13
1.10. Xplained Pro Extension Standard Header....15
1.11. Graphics Connector/GFX Card Interface.... 16
1.12. Buttons and LEDs.... 19
1.13. USB.... 19

2. Hardware....20
2.1. Schematics....20
2.2. Bill of Materials....36
2.3. Board Dimensions....38

The Microchip Web Site.... 39

Customer Change Notification Service.... 39

Customer Support.... 39

Microchip Devices Code Protection Feature....39

Legal Notice.... 40

Trademarks.... 40

Quality Management System Certified by DNV.... 40

Worldwide Sales and Service....41

# 1. Development Board Functionality and Features

## 1.1 Board Feature Location

**Figure 1-1. Curiosity PIC32MZ EF 2.0 Development Board Layout (Top View)**

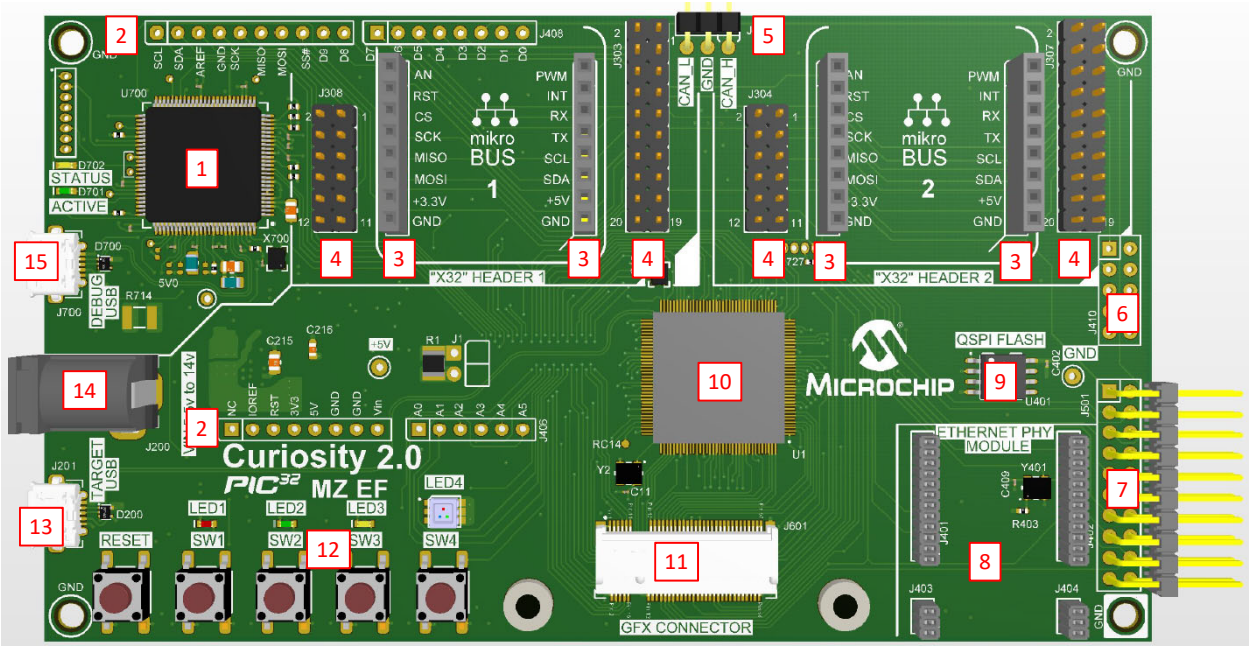


**Table 1-1. Board Features and Locations**

| Number | Description of Item |
|---|---|
| 1 | PICKit on Board 4 (PKoB4) |
| 2 | Arduino Uno interface. Headers not populated |
| 3 | mikroBUS Click interface. 2 per board |
| 4 | X32 Audio interface. 2 per board. Bluetooth & Audio codecs sold separately |
| 5 | CAN interface |
| 6 | Authentication interface. Header not populated |
| 7 | Xplained pro expansion compatible interface |
| 8 | Ethernet interface (RMII, SPI, GPIO). Ethernet PHY not included. |
| 9 | Quad SPI Memory 256 Mb |
| 10 | PIC32MZ2048EFM144 |
| 11 | Graphics Interface |
| 12 | Programmable user buttons & LEDs |
| 13 | USB to PIC32MZ EF |
| 14 | 2.5 mm barrel jack power input |

© 2019 Microchip Technology Inc.

| .....continued | |
|---|---|
| **Number** | **Description of Item** |
| 15 | USB to PKoB4 for debugging, power, virtual COM port |

## 1.2 System Block Diagram

The following high-level block diagram that shows the major data bus routing.

**Figure 1-2. System Block Diagram**

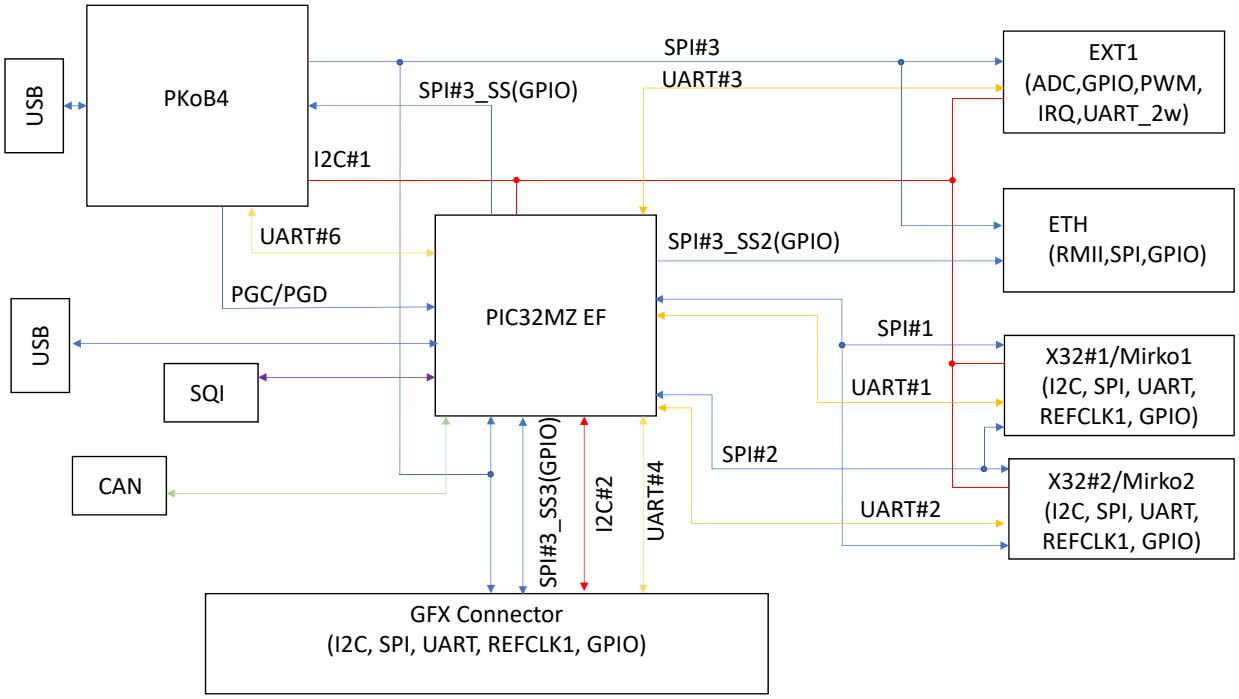


## 1.3 Power Block Diagram

The following figure shows a block diagram of the power system on the Curiosity PIC32MZ EF 2.0 Development Board. The Curiosity PIC32MZ EF 2.0 Development Board has several power sub systems that allow it to accept up to 16V. The barrel jack is a 2.1 mm center positive connector. The power in can also be connected through the Arduino header, this input is before the reverse voltage protection.

© 2019 Microchip Technology Inc.

**Figure 1-3. Power Block Diagram**

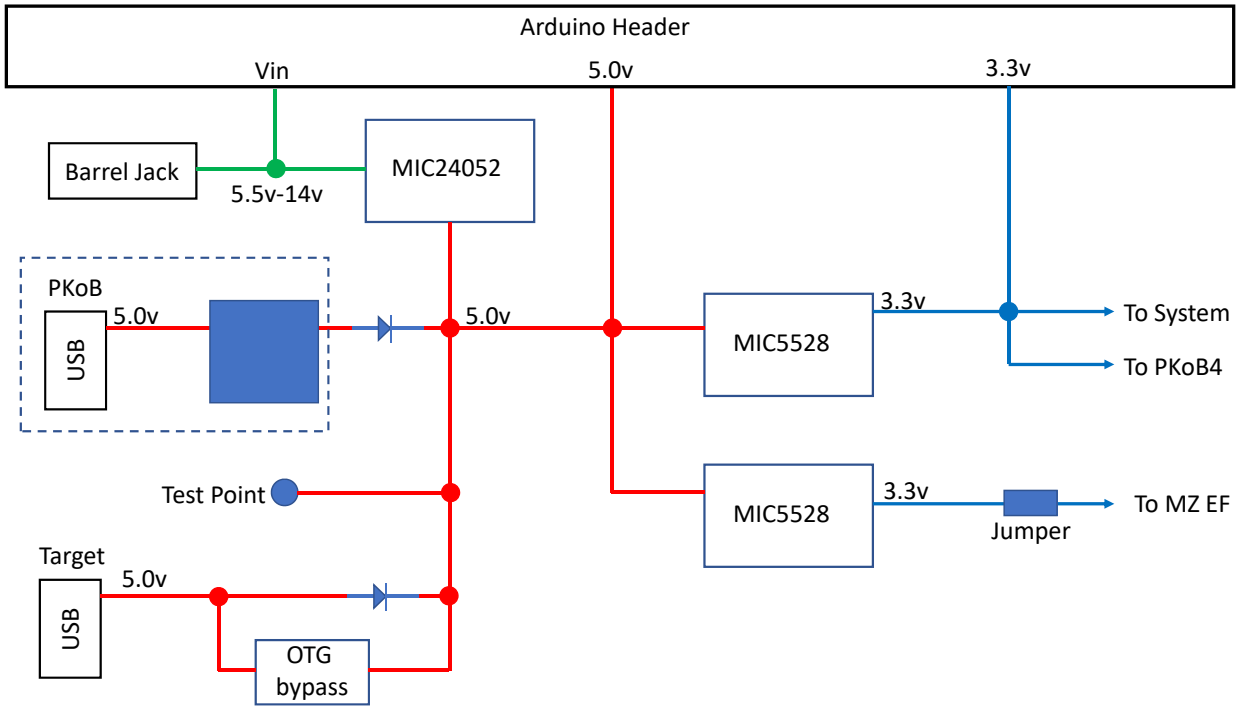


## 1.4 PICKit On-Board 4

The MPLAB® PICkit™ On-Board 4 (PKoB4) is a new generation of In-Circuit Debugger. The MPLAB PKoB4 programs faster than its predecessor, and is designed to use a high-speed 2.0 USB interface and provide a feature rich debugging experience through one USB cable. The PKoB4 is intended to support programming debugging and a Data Gateway interface.

The MPLAB PKoB4 In-Circuit Debugger is compatible with any of these platforms:

- Microsoft Windows® 7 or later
- Linux®
- macOS™

The MPLAB PKoB4 In-Circuit Debugger system provides the following advantages:

Features and Capabilities:

- Connects to computer through high-speed USB 2.0 (480 Mbits/s) cable
- Programs devices using MPLAB X IDE or MPLAB IPE
- Supports multiple hardware and software breakpoints, stopwatch, and source
- code file debugging
- Debugs your application in real time
- Sets breakpoints based on internal events
- Monitors internal file registers
- Debugs at full speed
- Configures pin drivers
- Field-upgradeable through an MPLAB X IDE firmware download
- Adds new device support and features by installing the latest version of MPLAB X IDE (available as a free download at https://www.microchip.com/mplabx/)
- Indicates debugger status through on-board LEDs

© 2019 Microchip Technology Inc.

Performance and Speed:

- More and faster memory
- A Real-Time Operating System (RTOS)
- No firmware download delays incurred when switching devices
- A 32-bit MCU running at 300 MHz

### 1.4.1 Recovery Method

When the MPLAB® PICkit™ On-Board 4 is not responding, the user can recover the it by following these steps:

1. With the Curiosity PIC32MZ EF 2.0 Development Board is still powered, short the two pads for approximately 10 seconds.

   **Figure 1-4. Location of Pads to Short**

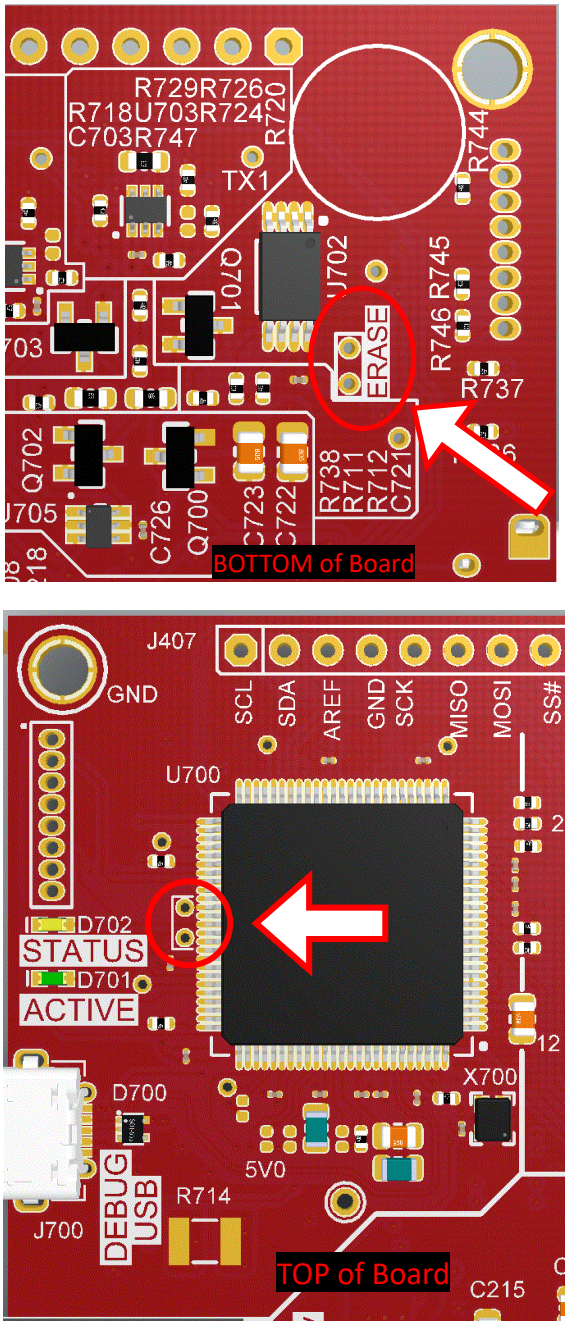

2. Open The latest version of MPLAB X.
3. Click on *Debug > Hardware Tool Emergency Boot Firmware Recovery*.

**Figure 1-5. Debugging Window**

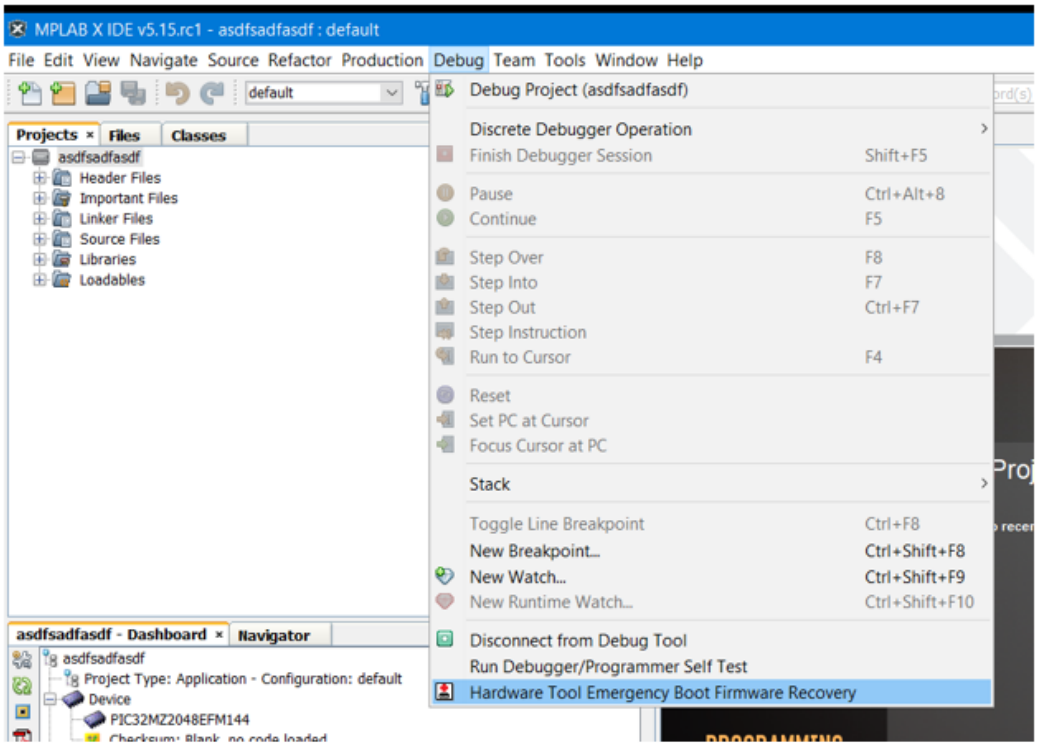


4. Follow the directions on the screen. This will bring the tool back to the factory conditions.

For additional information on the PKoB4, refer to the “MPLAB® PICkit™ 4 In-Circuit Debugger User’s Guide” (DS50000251), which is available for download at http://ww1.microchip.com/downloads/en/DeviceDoc/MPLAB%20PICkit%204%20ICD%20Users%20Guide%20DS50002751C.pdf

## 1.5 I²C Voltage Selection

The I²C voltage is defaulted to 3.3-volt pull ups. A 5.0-volt option is possible. In order to do this the trace must be cut and a resistor of 0 ohm or a bus bar must be installed. A 0805 SMD footprint has been provided. This is located on the back side of the board. The following figure shows the I²C jumper in the trace:

**Figure 1-6. I²C Jumper**

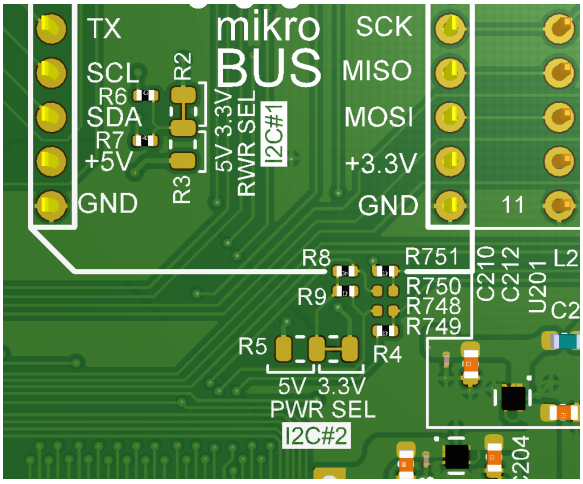


The following figure shows the schematic representation:

**Figure 1-7. Schematic Representation**

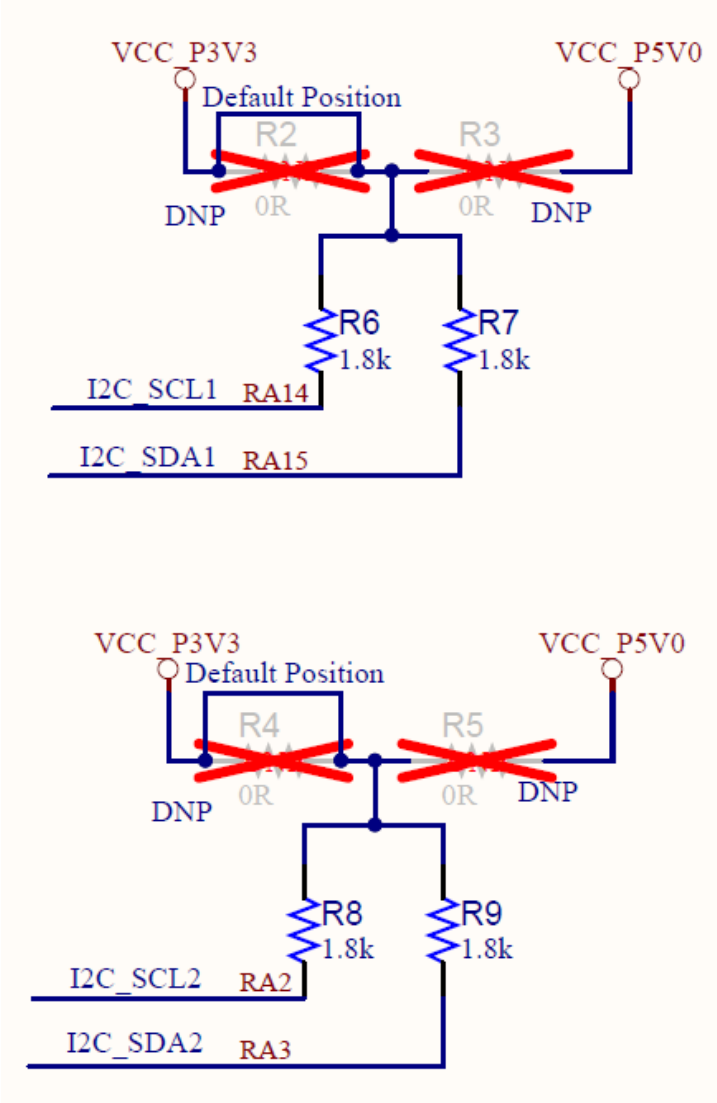

## 1.6 X32 Audio Interface

The X32 is a 32-pin interface to the board to support audio codec, DACs, and Bluetooth radios. This interface has audio supply $I^2S$ and other control lines, and data interfaces.

### 1.6.1 Block Diagram

The Curiosity PIC32MZ EF 2.0 Development Board has two X32 interfaces that share two $I^2S$ signals. The following figure shows the relation between the $I^2S$ signals and the X32 daughter board interface.

**Figure 1-8. X32 Interface Block Diagram**

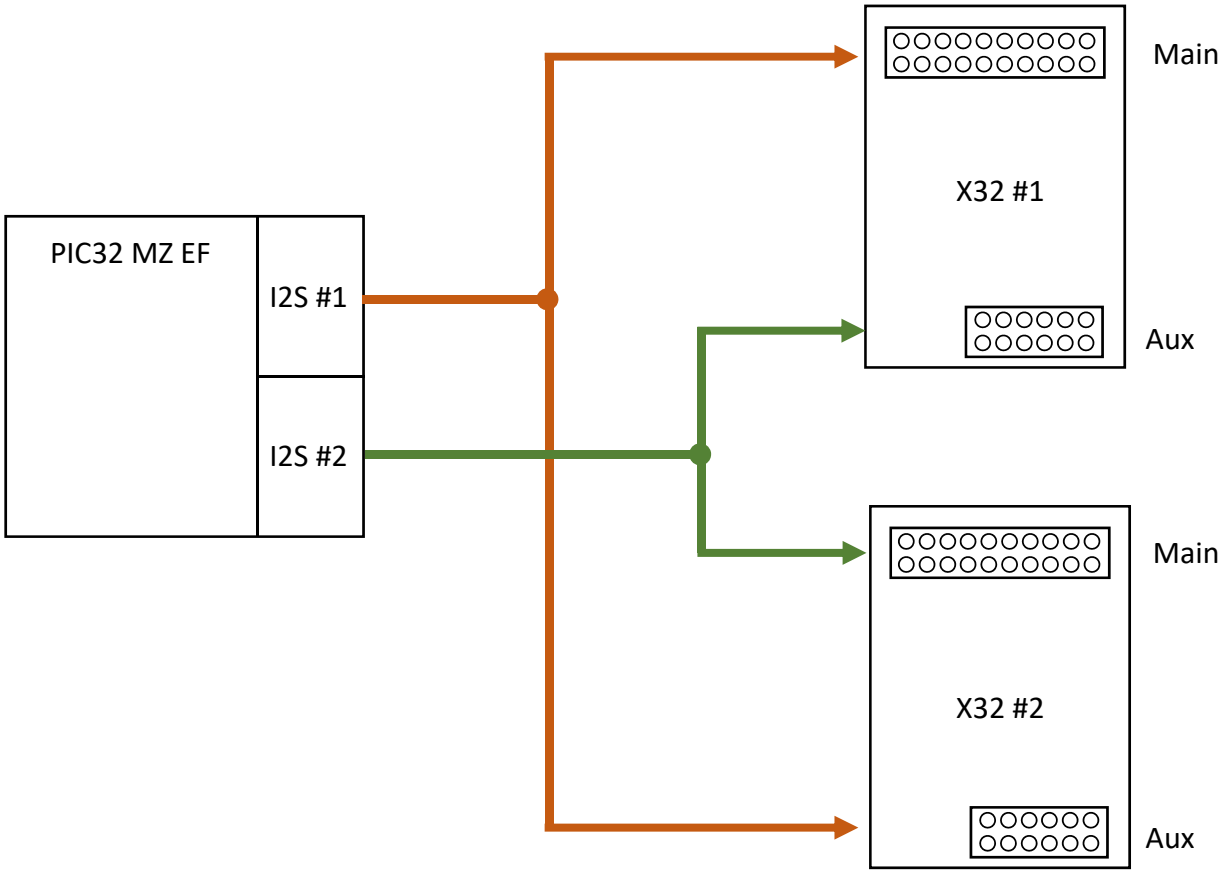


### 1.6.2 Pinout

The following table shows the pinout and description for the X32 Audio interface. Refer to the Schematics for additional information.

**Table 1-2. X32 Audio Interface Pinout**

| Pin Number | Name | Description | Interface |
|---|---|---|---|
| 1 | GND | Ground | Power |
| 2 | GND | Ground | Power |
| 3 | UART RX | UART RX, receive to MCU from DB | UART |
| 4 | UART CTS | UART Clear to send | UART |
| 5 | UART TX | UART TX, transmit from MCU to DB | UART |

© 2019 Microchip Technology Inc.

.....continued

| Pin Number | Name | Description | Interface |
|---|---|---|---|
| 6 | UART RTS | UART Ready to send | UART |
| 7 | $I^2C$ SCL | Clock line for $I^2C$ interface. | $I^2C$ |
| 8 | STBY/RST | Standby/Reset control | GPIO |
| 9 | $I^2C$ SDA | Data line for $I^2C$ interface. | $I^2C$ |
| 10 | Audio WS/LRCLK | Audio Word Select/Left Right Clock | $I^2S$ |
| 11 | Audio In | Audio into MCU, out from CODEC | $I^2S$ |
| 12 | Audio CLK | Audio clock | $I^2S$ |
| 13 | Audio out | Audio out of MCU, in to CODEC/DAC | $I^2S$ |
| 14 | REFCLK/MCK | Reference clock #1 | REFCLK |
| 15 | GND | Ground | Power |
| 16 | GND | Ground | Power |
| 17 | NC | Legacy hold over | - |
| 18 | +3.3v | VDD | Power |
| 19 | NC | Legacy hold over | - |
| 20 | +5.0v | VDD | Power |
| 21 (1) | Audio WS/ Audio LRCLK | Audio Word Select/Left Right Clock | $I^2S$ |
| 22 (2) | Card ID pin | Communication line to the daughter card and PKoB4. | Connected to PKoB4 |
| 23 (3) | Audio CLK | Audio Clock | $I^2S$ |
| 24 (4) | NC | | |
| 25 (5) | Audio IN | Audio into MCU, out from CODEC | $I^2S$ |
| 26 (6) | NC | | |
| 27 (7) | Audio OUT | Audio out of MCU, in to CODEC/DAC | $I^2S$ |
| 28 (8) | NC | | |
| 29 (9) | REFCLK2/MCK2 | Reference clock #2 | REFCLK |
| 30 (10) | NC | | |
| 31 (11) | GND | Ground | Power |
| 32 (12) | GND | Ground | Power |

### 1.6.3 Port Connections

The following table provides the port and connections to the X32 Audio interface. The $I^2S$ signals listed are the main signals, and both of these signals are available at each interface, refer to the X32 Interface Block Diagram for additional information.

**Table 1-3. Port Connections**

| Interface | X32#1 | X32#2 |
|---|---|---|
| UART RX | RPC4 | RPE9 |
| UART TX | RPC1 | RPG9 |

© 2019 Microchip Technology Inc.

.....continued

| Interface | X32#1 | X32#2 |
|---|---|---|
| UART RTS | RPE8 | RPF5 |
| UART CTS | RPF12 | RPD10 |
| $I^2C$ SDA | RA3 | RA3 |
| $I^2C$ SCL | RA2 | RA2 |
| Reset | RJ12 | RJ10 |
| REFCLK | RPD15 | RPD15 |
| $I^2S$ Clock | RPD1 | RPG6 |
| $I^2S$ Audio Out (MOSI) | RPD7 | RPG8 |
| $I^2S$ Audio In (MISO) | RPD14 | RPG7 |
| $I^2S$ LRCLK | RPD9 | RPC2 |

## 1.7 mikroBUS

The mikroBUS interface allows for the use of additional click™ boards. For additional information and to see the boards which can be used with this development board, refer to: https://www.mikroe.com/.

**Table 1-4. mikroBUS™ Pinout**

| Pin Number | Name | Function |
|---|---|---|
| 1 | GND | Ground |
| 2 | +5V | +5.0V |
| 3 | SDA | I2C SDA |
| 4 | SCL | I2C SCL |
| 5 | TX | UART TX |
| 6 | RX | UART RX |
| 7 | INT | Interrupt request line |
| 8 | PWM | Pulse width modulation |
| 9 | GND | Ground |
| 10 | +3.3V | Ground |
| 11 | MOSI | **M**aster **O**ut **S**lave **I**n line of serial peripheral interface. |
| 12 | MISO | **M**aster **I**n **S**lave **O**ut line of serial peripheral interface. |
| 13 | SCK | Clock for serial peripheral interface |
| 14 | CS | Chip Select for serial peripheral interface. (Active low) |
| 15 | RST | Reset |
| 16 | AN | Analog-to-digital converter. |

### 1.7.1 Port Connections

The following table provides the port connections to the mikroBUS interface. The mikroBUS is nested inside of the X32 Audio interface. Due to mechanical interference, either a mikroBUS or Audio interface can be used in the same

socket. The mikroBUS interface shares signals with the X32 Audio interface, refer to Pinout for additional information on pinout or signal probing.

**Table 1-5. Port Connections for the mikroBUS Interface**

| Interface | mikroBUS™ #1 | mikroBUS™ #2 |
|---|---|---|
| UART RX | RPC4 | RPE9 |
| UART TX | RPC1 | RPG9 |
| INT/IRQ | RPF12 | RPD10 |
| $I^2C$ SDA | RA3 | RA3 |
| $I^2C$ SCL | RA2 | RA2 |
| Reset | RJ12 | RJ10 |
| PWM | RPD15 | RPD15 |
| SPI Clock | RPD1 | RPG6 |
| SPI MOSI | RPD7 | RPG8 |
| SPI MISO | RPD14 | RPG7 |
| SPI SS | RPD9 | RPC2 |
| ADC | AN5 | AN6 |

## 1.8 Control Area Network (CAN) Bus Interface

The Curiosity PIC32MZ EF 2.0 Development Board provides access to a CAN interface that is post transceiver. The on-board CAN transceiver is an ATA6561, which allows the application to be used directly with any CAN bus compliant interface.

**Table 1-6. CAN Bus Interface**

| Pin Number | Name | Description | Port |
|---|---|---|---|
| 1 | CAN_H | CAN High Signal | - |
| 2 | GND | Ground | - |
| 3 | CAN_L | CAN Low Signal | - |
| - | CAN2_TX | CAN Transmit | RPD5 |
| - | CAN2_RX | CAN Receive | RPF5 |

## 1.9 Ethernet

The Curiosity PIC32MZ EF 2.0 Development Board has a modular Ethernet PHY system that enables different PHYs to be plugged into the board. This interface is set up to use a Reduced Media-Independent Interface (RMII interface) and a SPI bus interface with GPIO.

© 2019 Microchip Technology Inc.

**Figure 1-9. Ethernet PHY Header Configuration**

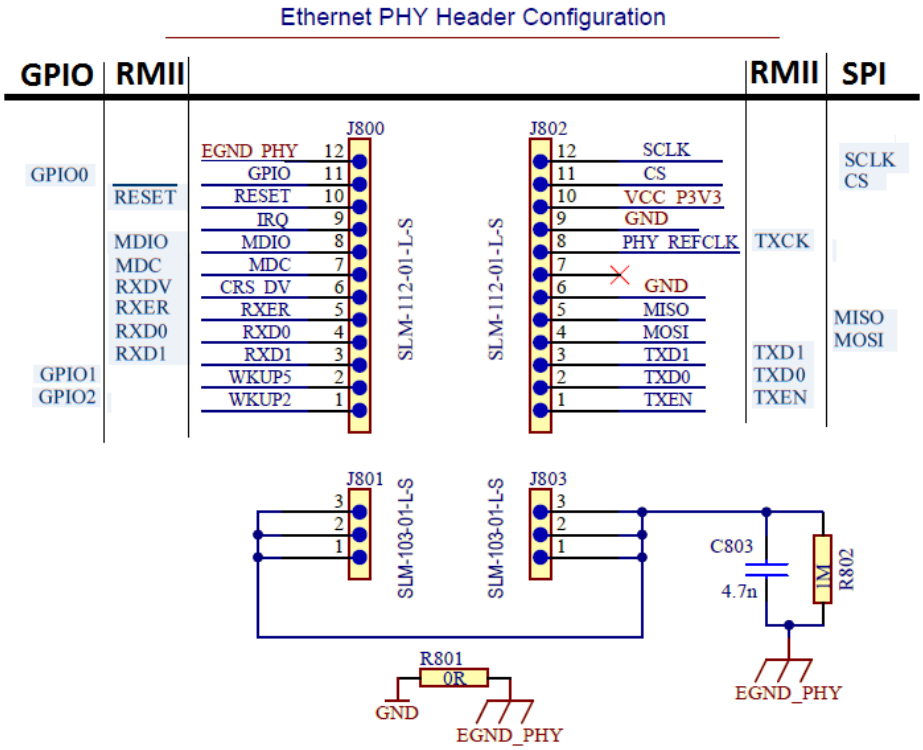


The following table provides the pinout and description of the Ethernet interface:

**Table 1-7. Pinout and Description for the Ethernet Interface**

| Pin Number | Name | Description | Port |
|---|---|---|---|
| 1 | GPIO | General purpose I/O | RH15 |
| 2 | GPIO | General purpose I/O | RH14 |
| 3 | RXD1 | Receive Data 1 | RH5 |
| 4 | RXD0 | Receive Data 0 | RH8 |
| 5 | RXER | Receive Error | RH4 |
| 6 | RXDV | Receive Data Valid | RH13 |
| 7 | MDC | Ethernet Management Data Clock | RD11 |
| 8 | MDIO | Ethernet Management Data | RJ1 |
| 9 | IRQ | Interrupt request line | RJ2 |
| 10 | RESET | Reset control to the Ethernet PHY | RJ0 |
| 11 | GPIO | General purpose I/O | RH12 |
| 12 | EGND | Shield Ground | - |
| 13 (1) | TXEN | Transmit Enable | RD6 |
| 14 (2) | TXD0 | Transmit Data | RJ8 |
| 15 (3) | TDX1 | Transmit Data | RJ9 |
| 16 (4) | MOSI | **M**aster **O**ut **S**lave **I**n line of serial peripheral interface. | RB3 |

.....continued

| Pin Number | Name | Description | Port |
|---|---|---|---|
| 17 (5) | MISO | **M**aster **I**n **S**lave **O**ut line of serial peripheral interface | RB5 |
| 18 (6) | GND | Ground | - |
| 19 (7) | NC | No Connect | - |
| 20 (8) | REFCLK (in) | Reference Clock input (50MHz) | RJ11 |
| 21 (9) | GND | GND | - |
| 22 (10) | +3.3v VDD | +3.3V VDD | - |
| 23 (11) | CS | Chip Select for serial peripheral interface | RH3 |
| 24 (12) | SCK | Clock for serial peripheral interface | RB14 |
| 25 -30 | EGND | Shield Ground | - |

## 1.10 Xplained Pro Extension Standard Header

The Curiosity PIC32MZ EF 2.0 Development Board has an Xplained Pro extension compatible interface that enables using the existing extension boards. This interface consists of a dual row, 20-pin, 100 mil, 90 degree extension male header. Xplained Pro extensions have their female counterparts. The extension headers can be used to connect a variety of Xplained Pro extension boards or to access the pins of the target MCU directly. All connected pins follow the defined pinout description as shown in the following table.

**Note:** All pins are not always connected.

**Table 1-8. Interface Pinout**

| Pin number | Name | Description | Port |
|---|---|---|---|
| 1 | ID | Communication line to the ID chip on an extension board | Connected to PKoB4 |
| 2 | GND | Ground | - |
| 3 | ADC(+) | Analog-to-digital converter, alternatively positive part of differential ADC | RB2/AN2 |
| 4 | ADC(-) | Analog-to-digital converter, alternatively negative part of differential ADC | RB12/AN7 |
| 5 | GPIO1 | General purpose I/O | RK4 |
| 6 | GPIO2 | General purpose I/O | RK5 |
| 7 | PWM(+) | Pulse width modulation, alternatively positive part of differential PWM | No Connect |
| 8 | PWM(-) | Pulse width modulation, alternatively negative part of differential PWM | No Connect |
| 9 | IRQ/INT/GPIO | Interrupt request line and/or general purpose I/O | RK0 |
| 10 | SPI SS B/GPIO | SPI Slave Select or General purpose I/O | RK6 |
| 11 | $I^2C$ SDA | Data line for $I^2C$ interface. Always implemented, bus type | RA15 |
| 12 | $I^2C$ SCL | Clock line for $I^2C$ interface. Always implemented, bus type. | RA14 |

© 2019 Microchip Technology Inc.

.....continued

| Pin number | Name | Description | Port |
|---|---|---|---|
| 13 | UART RX | Receiver line of target device UART | RPD15 |
| 14 | UART TX | Transmitter line of target device UART. | RPF4 |
| 15 | SPI SS A/GPIO | SPI Slave Select or General purpose I/O | RPB15 |
| 16 | SPI MOSI | **M**aster **O**ut **S**lave **I**n line of serial peripheral interface. Always implemented, bus type. | RPB3 |
| 17 | SPI MISO | **M**aster **I**n **S**lave **O**ut line of serial peripheral interface. Always implemented, bus type. | RPB5 |
| 18 | SPI SCK | Clock for serial peripheral interface. Always implemented, bus type | RPB14 |
| 19 | GND | Ground | - |
| 20 | VCC | Power for extension boards (3.3V) | - |

**Figure 1-10. Pinout Schematic**

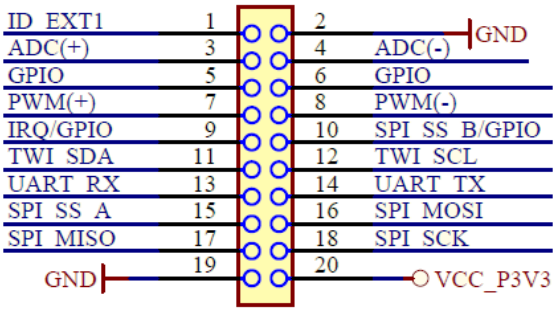


## 1.11 Graphics Connector/GFX Card Interface

The Curiosity PIC32MZ EF 2.0 Development Board has a new graphics interface that enables using different graphics cards to support different graphics models.

**Table 1-9. Graphics Pinout**

| Pin Number | Name | Description | Port |
|---|---|---|---|
| 1 | GND | Ground | - |
| 2 | GND | Ground | - |
| 3 | MCLR | Master Clear, controlled by the debuggers. allows for a complete system reboot | - |
| 4 | IRQ1 (LCD Touch) | Interrupt request line for cap touch device | RD0 |
| 5 | 5.0V VCC | 5.0V | - |
| 6 | IRQ2 (Q Touch) | Interrupt request line for Q touch devices | RH9 |
| 7 | LCDEN | LCD Data Enable | RK3 |
| 8 | IRQ3 (Display Controllers) | Interrupt request line for external display controllers | RH10 |

© 2019 Microchip Technology Inc.

.....continued

| Pin Number | Name | Description | Port |
|---|---|---|---|
| 9 | LCDHSYNC/NCS3 | LCD Horizontal Sync | RK1 |
| 10 | IRQ4 (Resistive touch) | Interrupt request line for resistive touch controllers | RH11 |
| 11 | LCDVSYNC/nWE | LCD Vertical Sync or Write enable (active low) | RK2 |
| 12 | 5.0V VCC | +5.0V | - |
| 13 | LCDPCK/nRD | LCD pixel Clock or Read Enable (active low) | RC3 |
| 14 | $I^2C$ SDA | Data line for $I^2C$ interface. Always implemented, bus type | RA3 |
| 15 | LCD D0 | LCD Data bit 0 | RE0 |
| 16 | I2C SCL | Clock line for $I^2C$ interface. Always implemented, bus type. | RA2 |
| 17 | LCD D1 | LCD Data bit 1 | RE1 |
| 18 | SPI SCK | Clock for serial peripheral interface. Always implemented, bus type | RPB14 |
| 19 | LCD D2 | LCD Data bit 2 | RE2 |
| 20 | SPI MOSI | **M**aster **O**ut **S**lave **I**n line of serial peripheral interface. | RPB3 |
| 21 | LCD D3 | LCD Data bit 3 | RE3 |
| 22 | SPI MISO | **M**aster **I**n **S**lave **O**ut line of serial peripheral interface. | RPB5 |
| 23 | LCD D4 | LCD Data bit 4 | RE4 |
| 24 | SPI SS | SPI Slave Select | RH2 |
| 25 | LCD D5 | LCD Data bit 5 | RE5 |
| 26 | UART RX | Receiver line of target device UART (Not Implemented on this design) | No Connect |
| 27 | LCD D6 | LCD Data bit 6 | RE6 |
| 28 | UART TX | Transmitter line of target device UART. (from MCU to GFX card) (Not Implemented on this design) | No Connect |
| 29 | LCD D7 | LCD Data bit 7 | RE7 |
| 30 | UART RTS | UART Ready To Send (from MCU to GFX card) (Not Implemented on this design) | No Connect |
| 31 | LCD D8 | LCD Data bit 8 | RG0 |
| 32 | UART CTS | UART Clear To Send (from MCU to GFX card) (Not Implemented on this design) | No Connect |
| 333 | LCD D9 | LCD Data bit 9 | RG1 |
| 34 | LCD PWM | LCD PWM back light control | RPB6/OC1 |
| 35 | LCD D10 | LCD Data bit 10 | RF1 |
| 36 | PWM2 | Pulse width modulation, | RPD15 |
| 37 | LCD D11 | LCD Data bit 11 | RF0 |

© 2019 Microchip Technology Inc.

.....continued

| Pin Number | Name | Description | Port |
|---|---|---|---|
| 38 | GPIO1 | General purpose I/O | RK4 |
| 39 | LCD D12 | LCD Data bit 12 | RD12 |
| 40 | GPIO2 | General purpose I/O | RK5 |
| 41 | LCD D13 | LCD Data bit 13 | RD13 |
| 42 | GPIO3 | General purpose I/O | RA4 |
| 43 | LCD D14 | LCD Data bit 14 | RD2 |
| 44 | STBY/RST/GPIO4 | Standby/reset or General purpose I/O. for resetting devices attached to the GFX connector | RJ14 |
| 45 | LCD D15 | LCD Data bit 15 | RD3 |
| 46 | STBY/RST/GPIO5 | Standby2/Reset2 or General purpose I/O | RJ15 |
| 47 | LCD D16 | LCD Data bit 16 (Not implemented on this design) | No Connect |
| 48 | ID pin | Communication line to the ID chip on an extension board | Connected to PKoB4 |
| 49 | LCD D17 | LCD Data bit 17 (Not implemented on this design) | No Connect |
| 50 | ADC 0 | Analog-to-digital converter (ADC) to MCU | AN23 |
| 51 | LCD D18 | LCD Data bit 18 (Not implemented on this design) | No Connect |
| 52 | ADC1 | ADC to MCU | AN24 |
| 53 | LCD D19 | LCD Data bit 19 (Not implemented on this design) | No Connect |
| 54 | ADC2 | ADC to MCU | AN27 |
| 55 | LCD D20 | LCD Data bit 20 (Not implemented on this design) | No Connect |
| 56 | ADC3 | ADC to MCU | AN28 |
| 57 | LCD D21 | LCD Data bit 21 (Not implemented on this design) | No Connect |
| 58 | ADC4 | ADC to MCU | AN34 |
| 59 | LCD D22 | LCD Data bit 22 | No Connect |
| 60 | ADC5 | ADC to MCU (Not implemented on this design) | No Connect |
| 61 | LCD D23 | LCD Data bit 23 (Not implemented on this design) | No Connect |
| 62 | ADC6 | ADC to MCU (Not implemented on this design) | No Connect |
| 63 | 3.3V VCC | +3.3V VCC | - |
| 64 | ADC7 | ADC to MCU (Not implemented on this design) | No Connect |
| 65 | GND | Ground | - |
| 66 | 3.3V VCC | +3.3V VCC | - |
| 67 | GND | Ground | - |
| 68 | GND TAB | Mounting Tab | - |
| 69 | GND TAB | Mounting Tab | - |

© 2019 Microchip Technology Inc.

## 1.12 Buttons and LEDs

The Curiosity PIC32MZ EF 2.0 Development Board offers several user buttons and LEDs. Some of the LEDs can be used with PWM (Output Compare). The following table shows the function, description and the port on the MCU.

**Table 1-10. Functions for Buttons and LEDs**

| Function | Description | Type | Port |
|---|---|---|---|
| SW1 | Users switch | Input | RJ4 |
| SW2 | Users switch | Input | RJ5 |
| SW3 | Users switch | Input | RJ6 |
| SW4 | Users switch | Input | RC15 |
| RESET | Hard reset of the PIC32 | Input | - |
| LED1 | User programmable LED. Single color | GPIO Output | RJ7 |
| LED2 | User programmable LED. Single color | GPIO Output | RK7 |
| LED3 | User programmable LED. Single color | GPIO Output | RJ3 |
| LED4 (Red) | RGB LED Red channel | GPIO or PWM | RPB7 or OC8 |
| LED4 (Green) | RGB LED Green Channel | GPIO or PWM | RPB8 or OC5 |
| LED4 (Blue) | REB LED Blue Channel | GPIO or PWM | RPB9 or OC3 |

## 1.13 USB

The Curiosity PIC32MZ EF 2.0 Development Board has a high-speed USB 2.0 connection for user application. This port can act as either a device class or host class.

For Device class, use the USB cable which can be plugged into the target USB. Refer to 1.1 Board Feature Location for additional information.

For host device class operation, a USB OTG cable is needed. To enable power from the Curiosity PIC32MZ EF 2.0 Development Board, the user must control the VBUS Enable pin. The Curiosity PIC32MZ EF 2.0 Development Board must be powered through an external source, Vin, PKoB4, or barrel jack.

**Table 1-11. VBUS Enable Pin Description**

| Function | Description | Port |
|---|---|---|
| VBUS Enable | Enable power control to USB devices attached to the Curiosity PIC32MZ EF 2.0 Development Board. | RJ13 |

© 2019 Microchip Technology Inc.

# 2. Hardware

## 2.1 Schematics

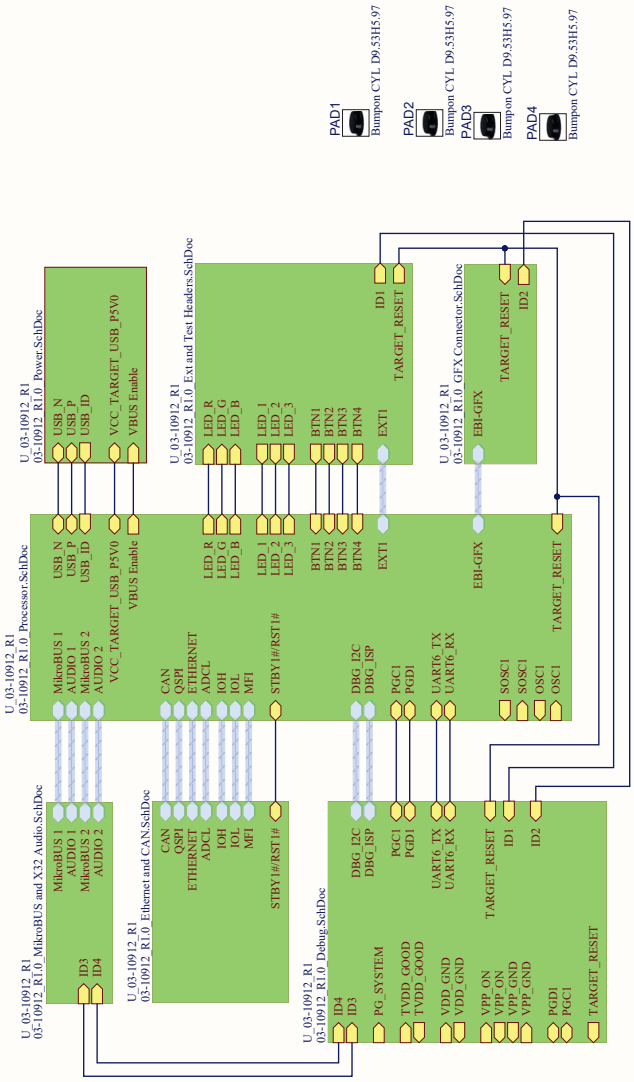

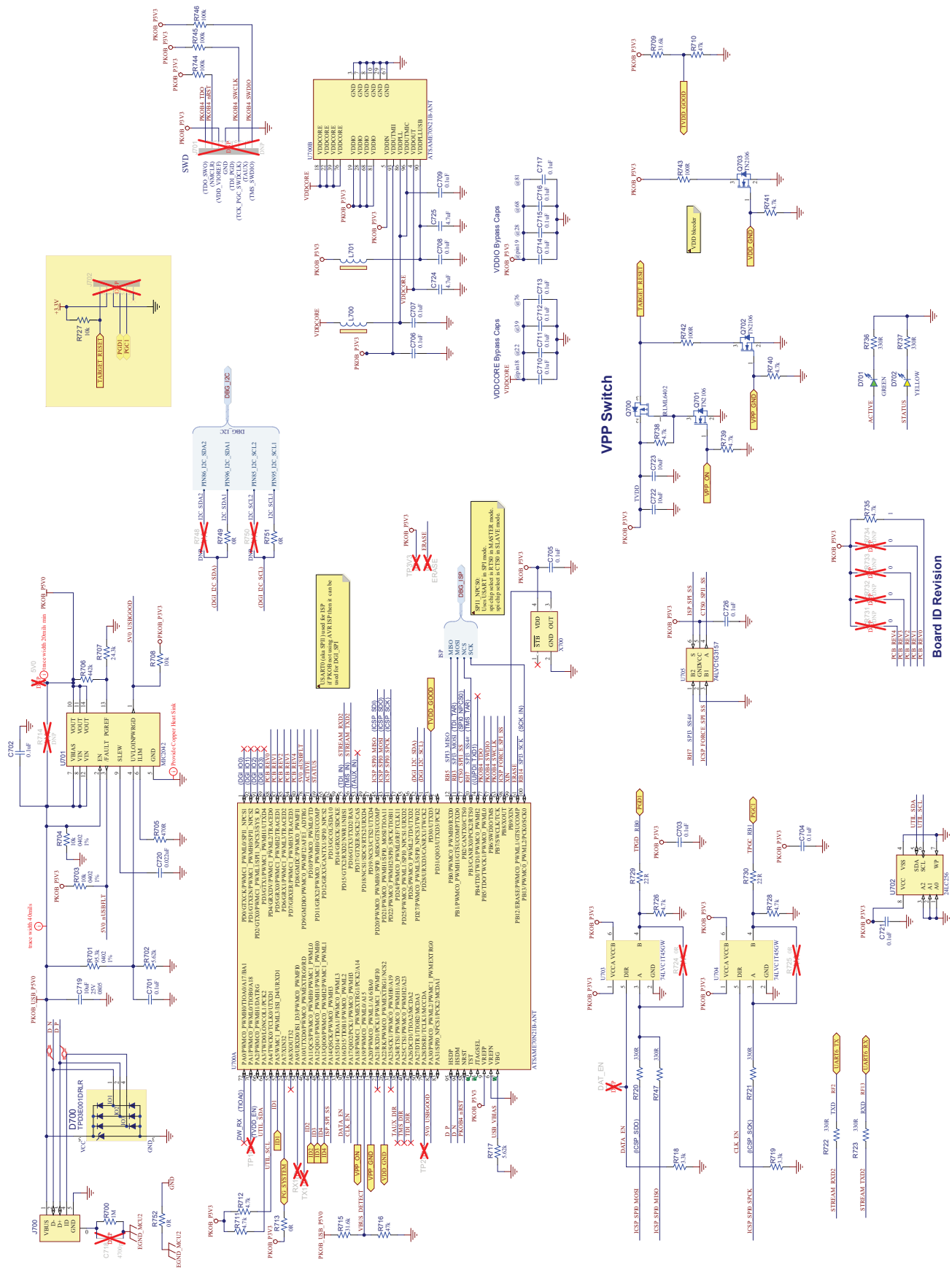
SWD
VDDCORE Bypass Caps
VDDIO Bypass Caps
VPP Switch
Board ID Revision
D700
TPD2E001DRLR
U700A
XTSAME70N21B-ANT
U701
MIC5342
Provide Copper Heat Sink
U702
24LC256
U703
74LVC1T45GW
U704
74LVC1T45GW
U705
74LVC1G157
Q700
RLLML6402
Q701
TN2106
Q702
TN2106
Q703
TN2106
J700
DBG_I2C
DBG_ISP
TARGET_RESET
VDD_GOOD
VPP_ON
VPP_GND
VDD_bleeder
TVDD_GOOD
ACTIVE
GREEN
STATUS
YELLOW
ERASE
STB
VDD
GND
OUT
X700
ICSP SPD MOSI
ICSP SPD MISO
ICSP SPD SPCK
STREAM_RXD2
STREAM_TXD2
UART0_TX
UART0_RX
DAT_EN
CLK_EN
DATA_EN
VBUS_DETECT
USB_VBUS
D_P
D_N
PKOB_USB_P5V0
PKOB_P3V3
5V0_USBGOOD
5V0_nISRFLT
PGD1
PGC1
+12V
TVDD
VDDCORE
VDDIO
PKOB_SWCLK
PKOB_SWDIO
PKOB_TDO
PKOB_nRST
PKOB_TDI
PKOB_nTRST
PIN86_I2C_SDA2
PIN96_I2C_SDA1
PIN85_I2C_SCL2
PIN95_I2C_SCL1
(I2C1_I2C_SDA)
(I2C1_I2C_SCL)
trace width 20mils min
trace width 40mils
SPI_NSCS0
Use this SPI in SPI mode.
spi chip select is PI30 in MASTER mode.
spi chip select is CI30 in SLAVE mode.
USART0 (aka SPI1) used for ISP
(I2C0 (aka TWI0) used for I2C1 then it can be used for DGI_SPI

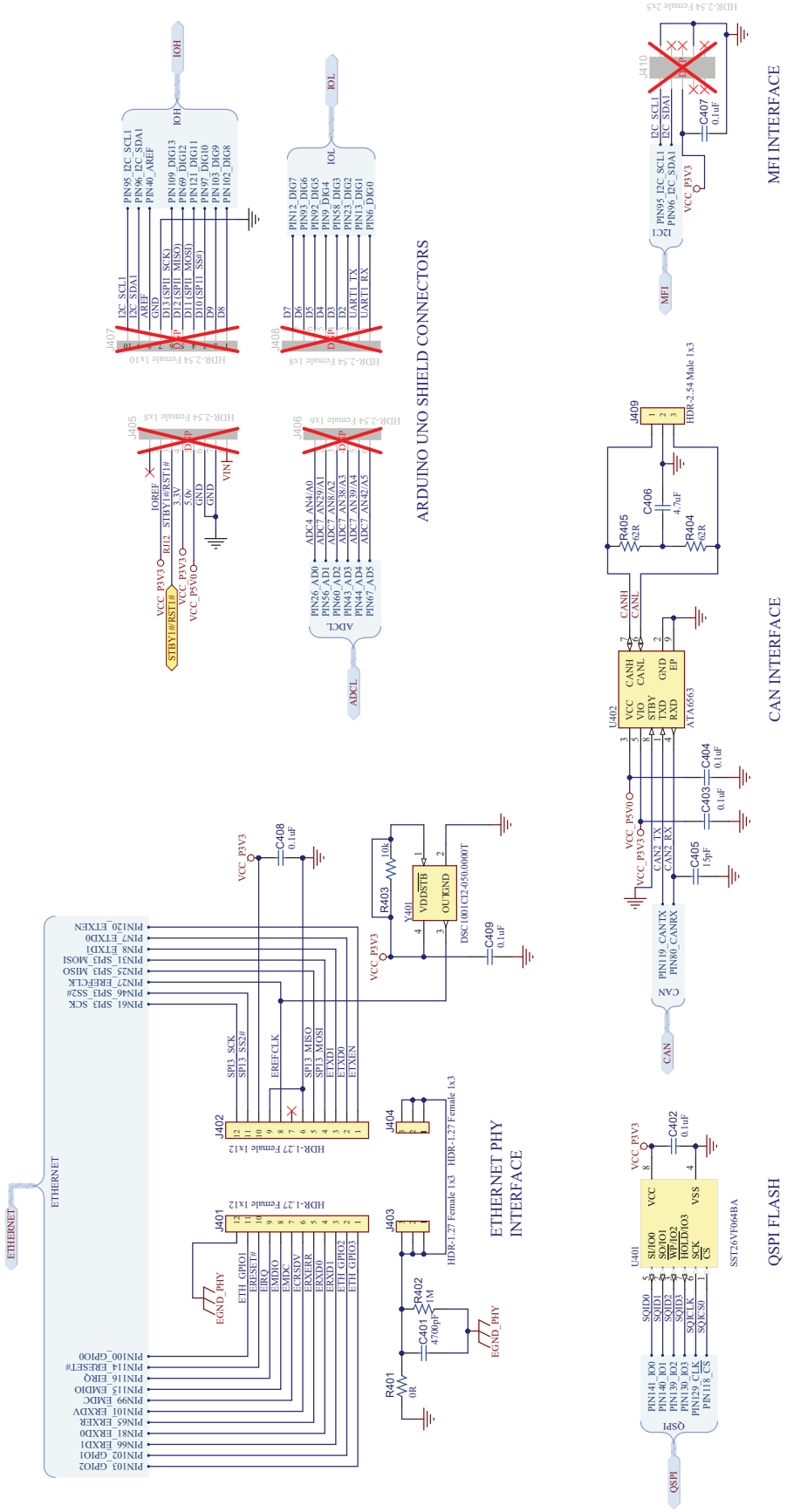
ARDUINO UNO SHIELD CONNECTORS
ETHERNET PHY INTERFACE
MFI INTERFACE
CAN INTERFACE
QSPI FLASH
ETHERNET
IOH
IOL
ADCL
MFI
CAN
QSPI
J407
J408
J405
J406
J410
J409
J402
J401
J403
J404
U402
U401
Y401
R401
R402
R403
R404
R405
R406
C401
C402
C403
C404
C405
C406
C407
C408
C409
EGND_PHY
VCC_P3V3
VCC_P5V0
SST26VF064BA
ATA6563
DSC1001CI2-050.0000T
HDR-2.54 Female 1x10
HDR-2.54 Female 1x8
HDR-2.54 Female 1x6
HDR-2.54 Female 2x5
HDR-2.54 Male 1x3
HDR-1.27 Female 1x12
HDR-1.27 Female 1x3

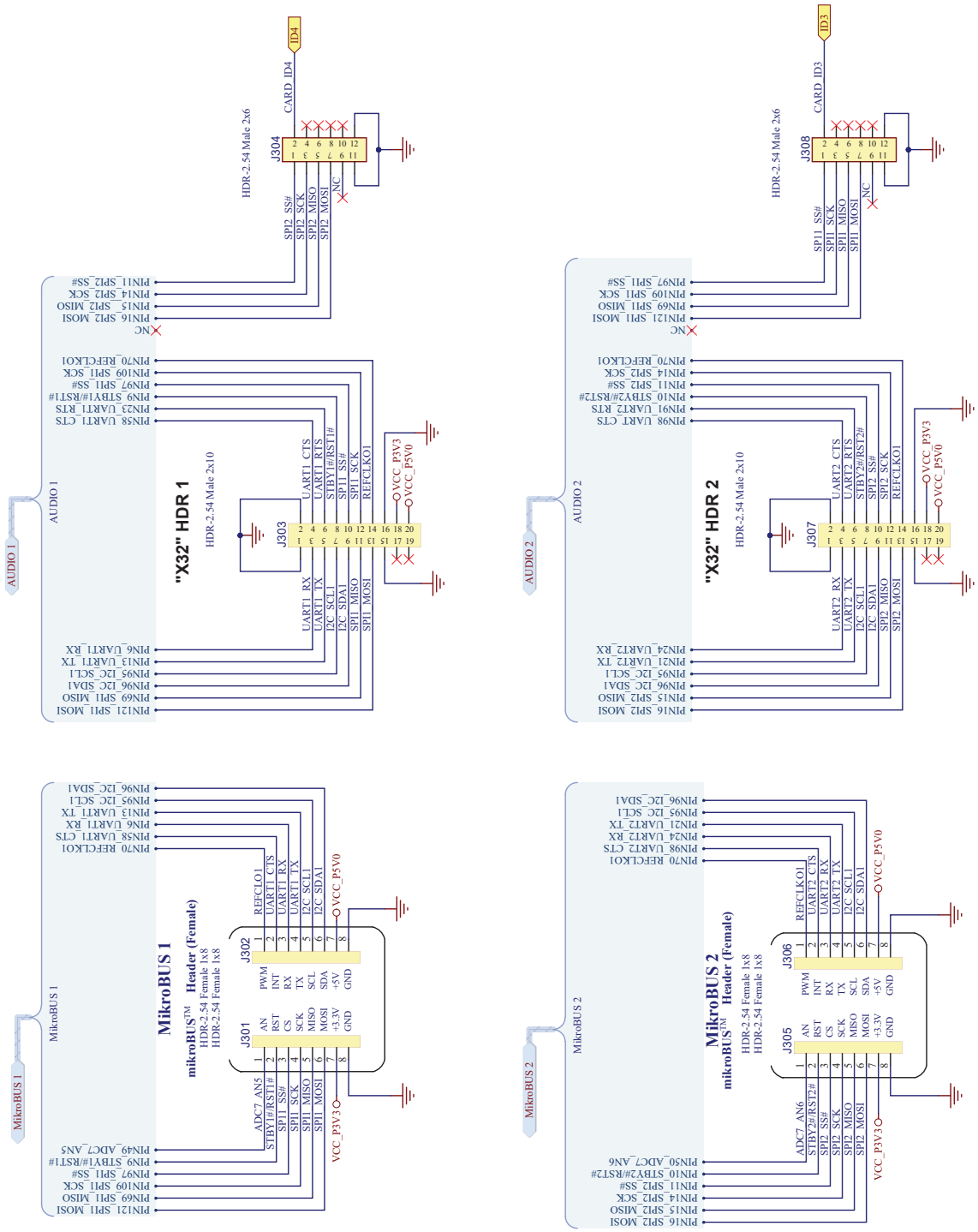
AUDIO 1
"X32" HDR 1
HDR-2.54 Male 2x10
J303
UART1_RX
UART1_TX
I2C_SCL1
I2C_SDA1
SPI1_MISO
SPI1_MOSI
UART1_CTS
UART1_RTS
STBY1#/RST1#
SPI1_SS#
SPI1_SCK
REFCLKO1
VCC_P3V3
VCC_P5V0
PIN6_UART1_RX
PIN13_UART1_TX
PIN95_I2C_SCL1
PIN96_I2C_SDA1
PIN69_SPI1_MISO
PIN121_SPI1_MOSI
PIN58_UART1_CTS
PIN23_UART1_RTS
PIN9_STBY1#/RST1#
PIN97_SPI1_SS#
PIN109_SPI1_SCK
PIN70_REFCLKO1
NC
PIN16_SPI2_MOSI
PIN15_SPI2_MISO
PIN14_SPI2_SCK
PIN11_SPI2_SS#
J304
HDR-2.54 Male 2x6
SPI2_SS#
SPI2_SCK
SPI2_MISO
SPI2_MOSI
NC
CARD_ID4
ID4
AUDIO 2
"X32" HDR 2
HDR-2.54 Male 2x10
J307
UART2_RX
UART2_TX
I2C_SCL1
I2C_SDA1
SPI2_MISO
SPI2_MOSI
UART2_CTS
UART2_RTS
STBY2#/RST2#
SPI2_SS#
SPI2_SCK
REFCLKO1
VCC_P3V3
VCC_P5V0
PIN24_UART2_RX
PIN21_UART2_TX
PIN95_I2C_SCL1
PIN96_I2C_SDA1
PIN15_SPI2_MISO
PIN16_SPI2_MOSI
PIN98_UART2_CTS
PIN91_UART2_RTS
PIN10_STBY2#/RST2#
PIN11_SPI2_SS#
PIN14_SPI2_SCK
PIN70_REFCLKO1
NC
PIN121_SPI1_MOSI
PIN69_SPI1_MISO
PIN109_SPI1_SCK
PIN97_SPI1_SS#
J308
HDR-2.54 Male 2x6
SPI1_SS#
SPI1_SCK
SPI1_MISO
SPI1_MOSI
NC
CARD_ID3
ID3
MikroBUS 1
MikroBUS 1
MikroBUS™ Header (Female)
HDR-2.54 Female 1x8
HDR-2.54 Female 1x8
J301
AN
RST
CS
SCK
MISO
MOSI
+3.3V
GND
J302
PWM
INT
RX
TX
SCL
SDA
+5V
GND
REFCLO1
UART1_CTS
UART1_RX
UART1_TX
I2C_SCL1
I2C_SDA1
VCC_P5V0
ADC7_AN5
STBY1#/RST1#
SPI1_SS#
SPI1_SCK
SPI1_MISO
SPI1_MOSI
VCC_P3V3
PIN49_ADC7_AN5
PIN9_STBY1#/RST1#
PIN97_SPI1_SS#
PIN109_SPI1_SCK
PIN69_SPI1_MISO
PIN121_SPI1_MOSI
PIN70_REFCLKO1
PIN58_UART1_CTS
PIN6_UART1_RX
PIN13_UART1_TX
PIN95_I2C_SCL1
PIN96_I2C_SDA1
MikroBUS 2
MikroBUS 2
MikroBUS™ Header (Female)
HDR-2.54 Female 1x8
HDR-2.54 Female 1x8
J305
AN
RST
CS
SCK
MISO
MOSI
+3.3V
GND
J306
PWM
INT
RX
TX
SCL
SDA
+5V
GND
REFCLKO1
UART2_CTS
UART2_RX
UART2_TX
I2C_SCL1
I2C_SDA1
VCC_P5V0
ADC7_AN6
STBY2#/RST2#
SPI2_SS#
SPI2_SCK
SPI2_MISO
SPI2_MOSI
VCC_P3V3
PIN50_ADC7_AN6
PIN10_STBY2#/RST2#
PIN11_SPI2_SS#
PIN14_SPI2_SCK
PIN15_SPI2_MISO
PIN16_SPI2_MOSI
PIN70_REFCLKO1
PIN98_UART2_CTS
PIN24_UART2_RX
PIN21_UART2_TX
PIN95_I2C_SCL1
PIN96_I2C_SDA1

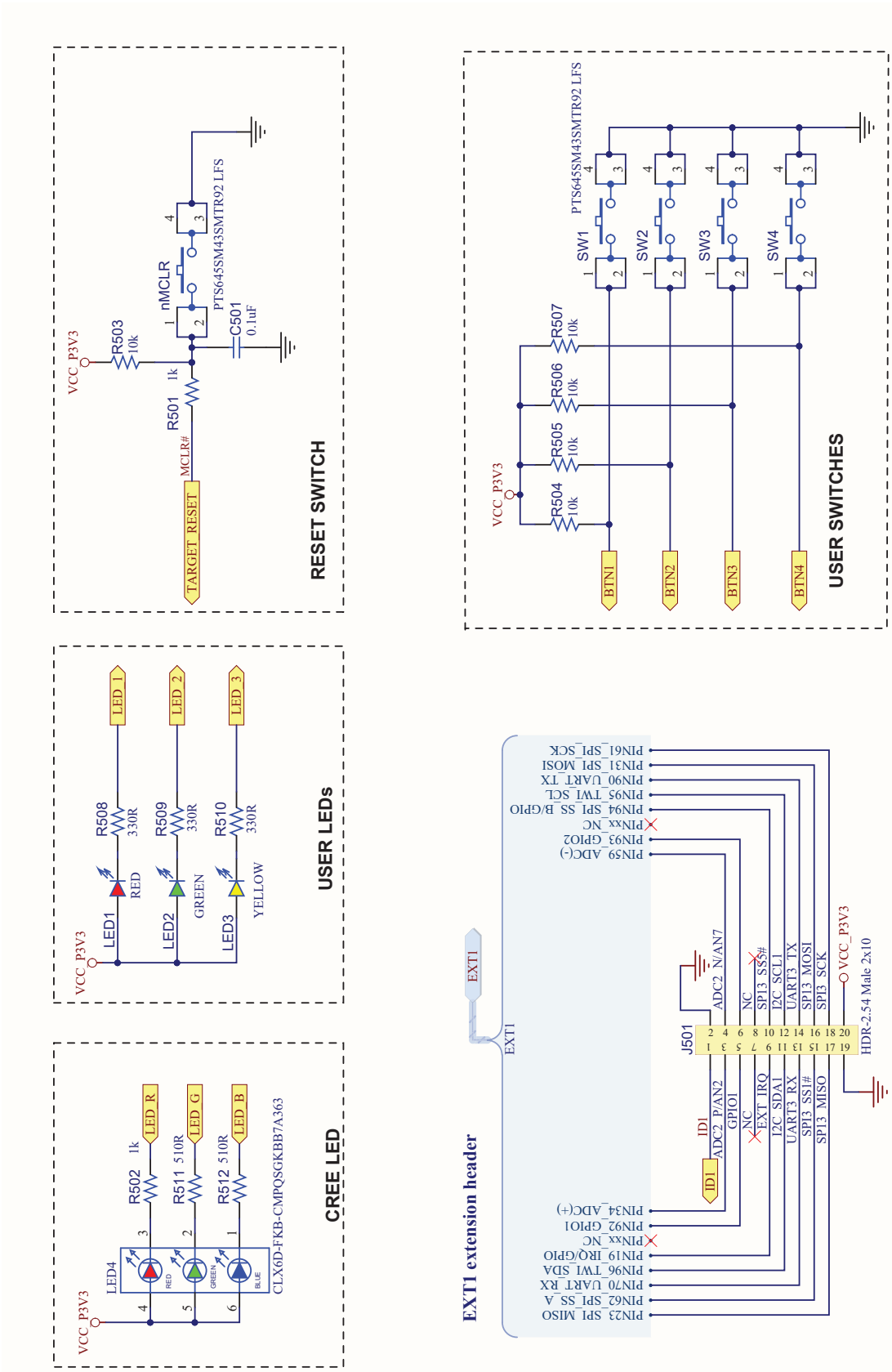
RESET SWITCH
TARGET_RESET
MCLR#
R501 1k
VCC_P3V3
R503 10k
nMCLR
PTS645SM43SMTR92 LFS
C501 0.1uF
USER SWITCHES
BTN1
BTN2
BTN3
BTN4
R504 10k
R505 10k
R506 10k
R507 10k
SW1
SW2
SW3
SW4
USER LEDs
LED1
LED2
LED3
RED
GREEN
YELLOW
R508 330R
R509 330R
R510 330R
LED 1
LED 2
LED 3
CREE LED
LED4
R502 1k
R511 510R
R512 510R
LED R
LED G
LED B
CLX6D-FKB-CMPQSGKBB7A363
EXT1 extension header
EXT1
J501
HDR-2.54 Male 2x10
ID1
PIN23_SPI_MISO
PIN62_SPI_SS_A
PIN70_UART_RX
PIN96_TWI_SDA
PIN19_IRQ/GPIO
PIN34_ADC(+)
PIN92_GPIO1
PIN59_ADC(-)
PIN93_GPIO2
PIN61_SPI_SCK
PIN31_SPI_MOSI
PIN90_UART_TX
PIN95_TWI_SCL
PIN94_SPI_SS_B/GPIO
ADC2_P/AN2
GPIO1
EXT_IRQ
I2C_SDA1
UART3_RX
SP13_SS1#
SP13_MISO
ADC2_N/AN7
SP13_SS3#
I2C_SCL1
UART3_TX
SP13_MOSI
SP13_SCK
VCC_P3V3

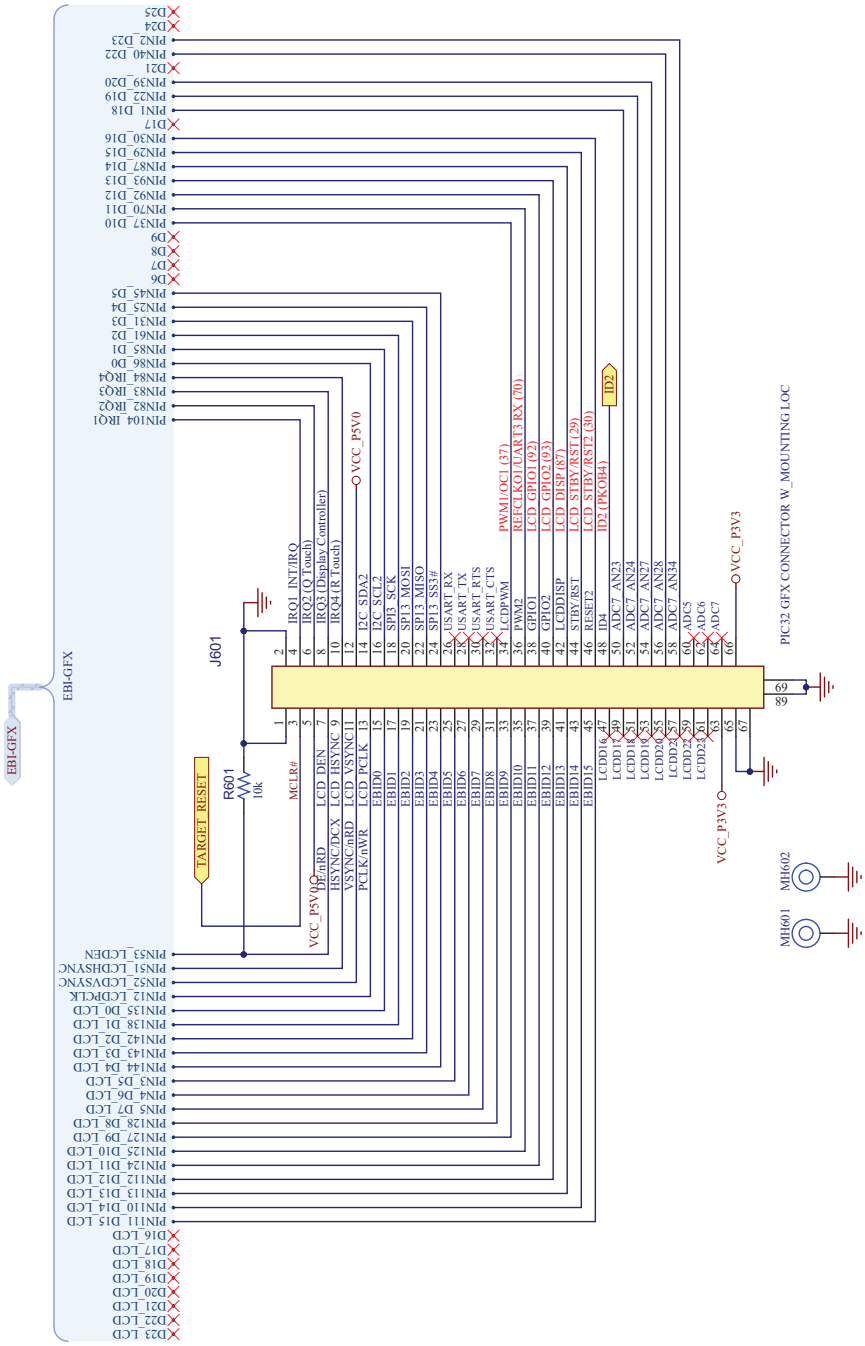
EBI-GFX
J601
R601
10k
TARGET_RESET
MCLR#
VCC_P5V0
VCC_P3V3
ID2
PWM1/OC1 (37)
REFCLKO1/UART3-RX (70)
LCD_GPIO1 (92)
LCD_GPIO4 (93)
LCD_DISP (87)
LCD_STBY_RST (29)
LCD_STBY_RST2 (30)
ID2 (PKOB4)
PIC32 GFX CONNECTOR W_MOUNTING LOC
MH601
MH602

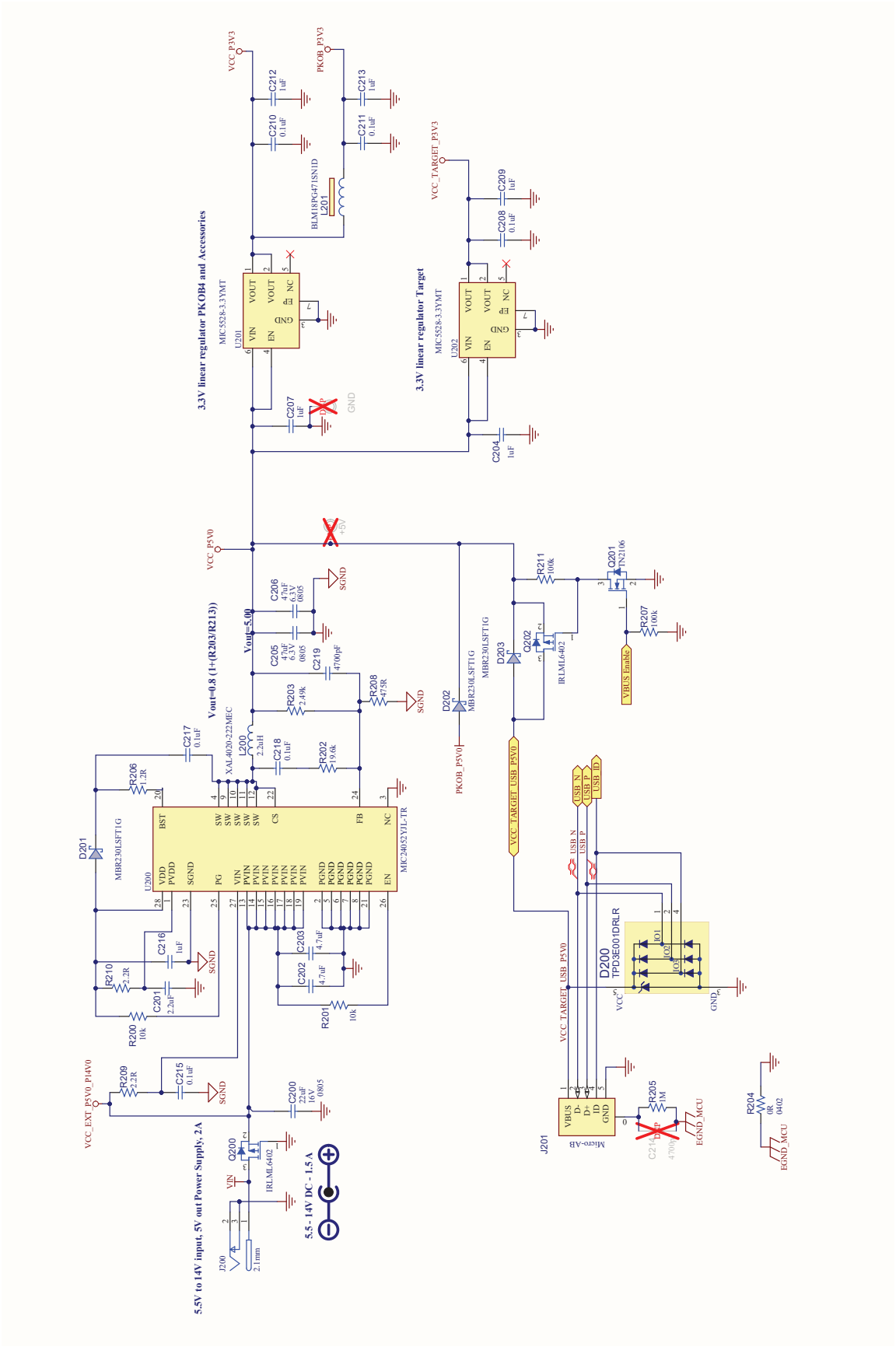
3.3V linear regulator PKOB4 and Accessories
MIC5528-3.3YMT
U201
VIN
EN
VOUT
VOUT
GND
EP
NC
VCC_P3V3
PKOB_P3V3
C212 1uF
C210 0.1uF
C213 1uF
C211 0.1uF
BLM18PG471SN1D
L201
C207 1uF
GND
3.3V linear regulator Target
MIC5528-3.3YMT
U202
VCC_TARGET_P3V3
C209 1uF
C208 0.1uF
C204 1uF
VCC_P5V0
+5V
Vout=0.8 (1+(R203/R213))
Vout=5.00
C206 47uF 6.3V 0805
C205 47uF 6.3V 0805
C219 4700pF
SGND
R203 2.49k
R208 475R
L200 2.2uH
XAL4020-222MEC
C218 0.1uF
R202 19.6k
C217 0.1uF
R206 1.2R
D201
MBR230LSFT1G
U200
MIC24052YJL-TR
VDD
PVDD
SGND
PG
VIN
PVIN
BST
SW
CS
FB
NC
EN
PGND
C216 1uF
R210 2.2R
C201 2.2uF
R200 10k
C203 4.7uF
C202 4.7uF
R201 10k
D202
MBR230LSFT1G
PKOB_P5V0
D203
MBR230LSFT1G
Q202
IRLML6402
R211 100k
Q201
IN2106
R207 100k
VBUS Enable
VCC_TARGET_USB_P5V0
USB_N
USB_P
USB_ID
D200
TPD3E001DRLR
IO1
IO2
IO3
VCC
GND
J201
Micro-AB
VBUS
D-
D+
ID
GND
R205 1M
EGND_MCU
R204 0R 0402
VCC_EXT_P5V0_P14V0
R209 2.2R
C215 0.1uF
C200 22uF 16V 0805
Q200
IRLML6402
VIN
J200
2.1mm
5.5V to 14V input, 5V out Power Supply, 2A
5.5 - 14V DC - 1.5A

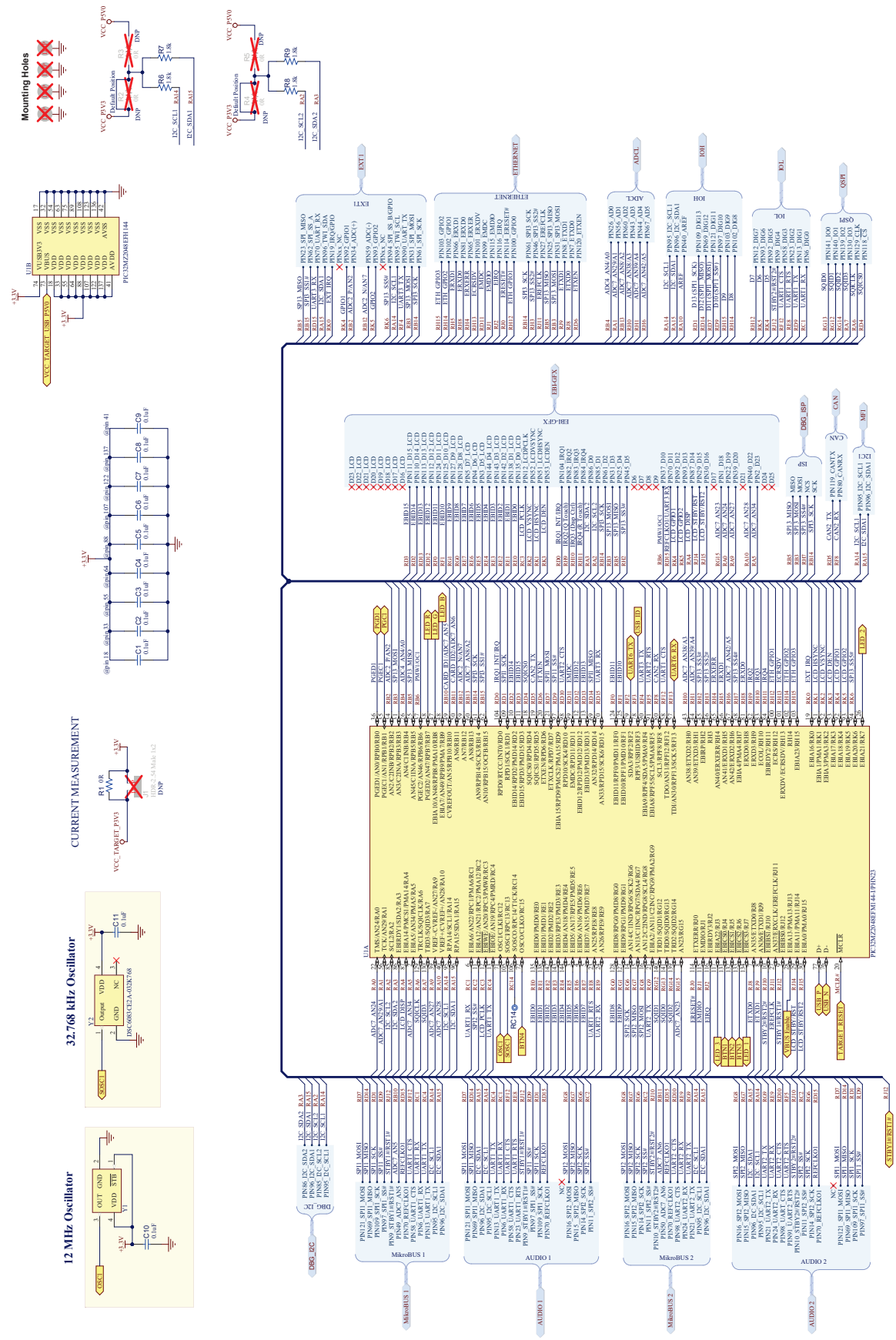
12 MHz Oscillator
32.768 kHz Oscillator
CURRENT MEASUREMENT
Mounting Holes
EXT1
ETHERNET
ADC1
IOH
IOL
QSPI
EBI-GFX
DBG_ISP
CAN
MFI
I2C1
DBG_I2C
MikroBUS 1
AUDIO 1
MikroBUS 2
AUDIO 2
PIC32MZ2048EFM144 (PIN23)

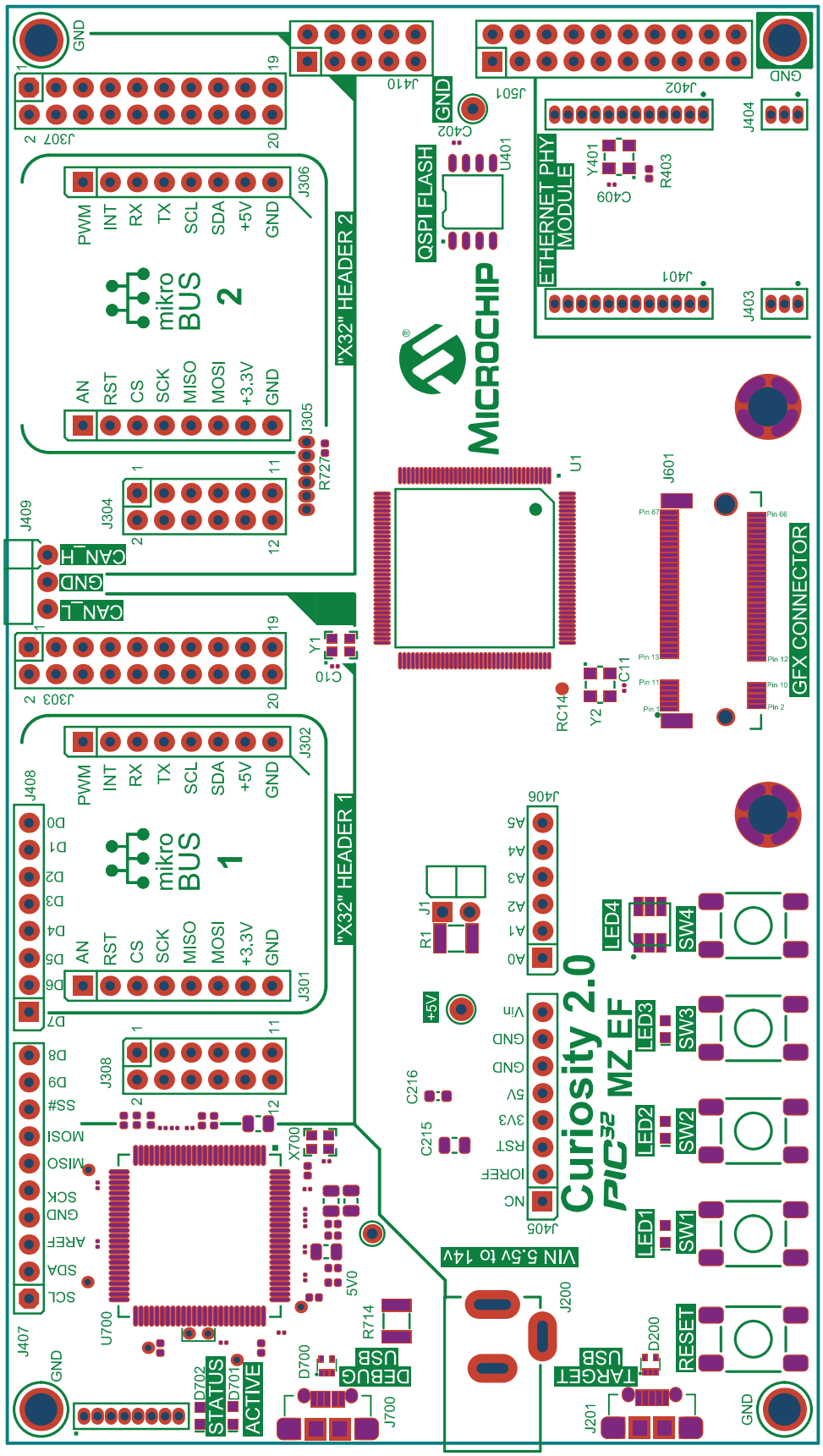
"X32" HEADER 2
"X32" HEADER 1
mikro BUS 2
mikro BUS 1
PWM INT RX TX SCL SDA +5V GND
AN RST CS SCK MISO MOSI +3.3V GND
CAN_H
GND
CAN_L
QSPI FLASH
ETHERNET PHY MODULE
MICROCHIP
GFX CONNECTOR
Curiosity 2.0
PIC32 MZ EF
VIN 5.5V to 14V
DEBUG USB
TARGET USB
STATUS
ACTIVE
RESET
LED1
LED2
LED3
LED4
SW1
SW2
SW3
SW4
GND

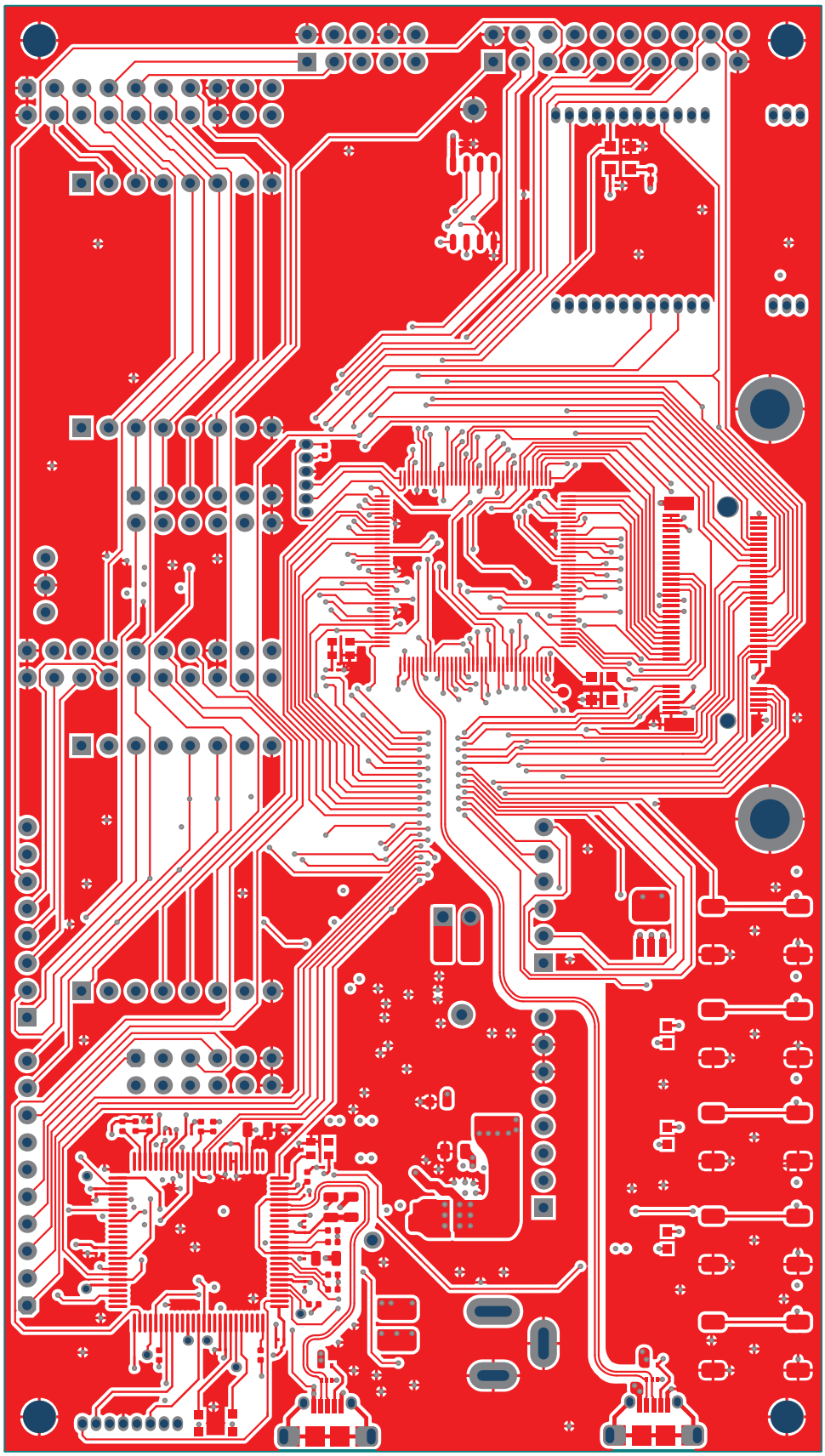

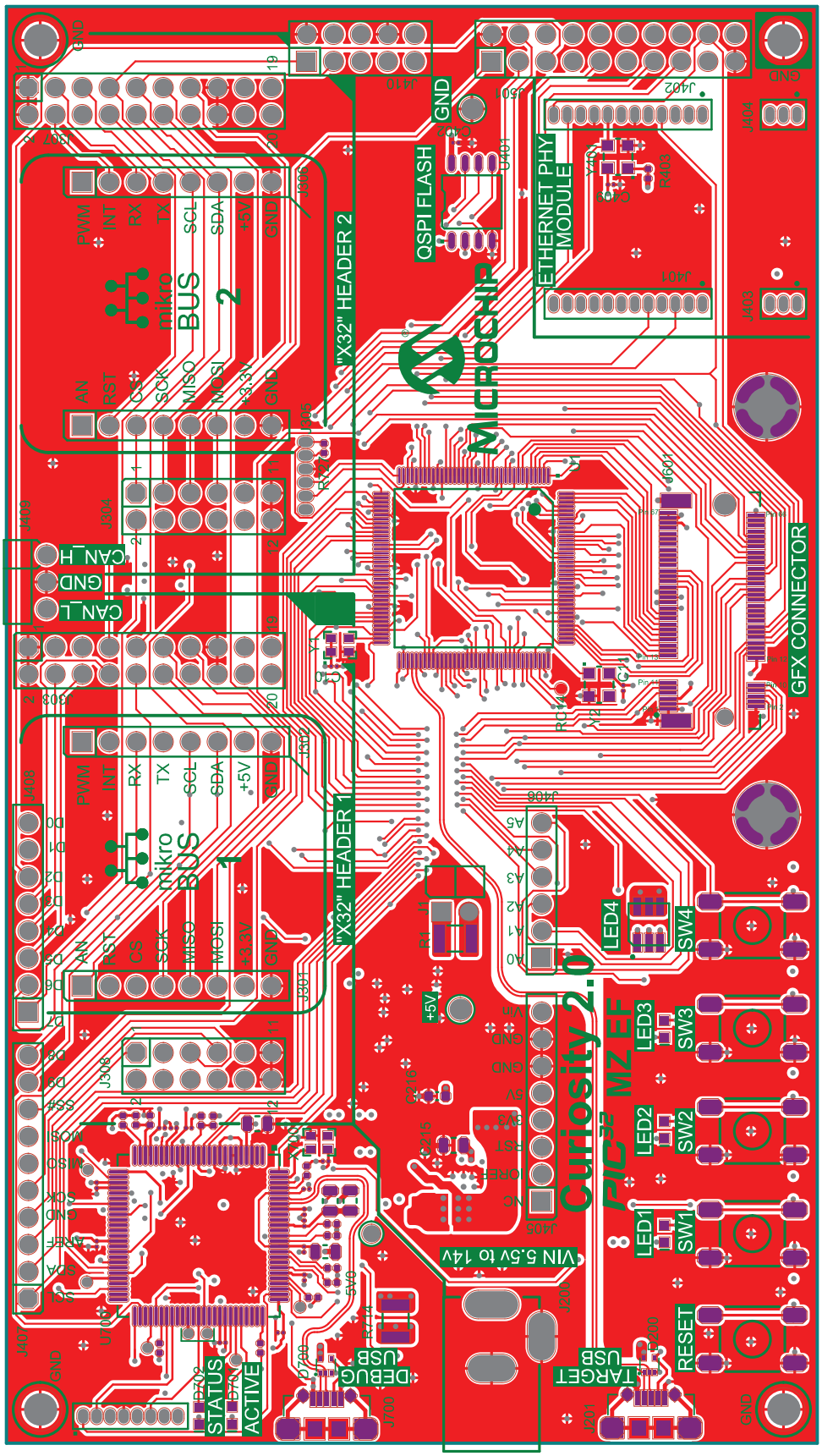
mikro BUS 2
mikro BUS 1
mX32" HEADER 2
mX32" HEADER 1
QSPI FLASH
ETHERNET PHY MODULE
GFX CONNECTOR
CAN_H
GND
CAN_L
Curiosity 2.0
PIC32 M7 EF
VIN 5.5V to 14V
DEBUG USB
TARGET USB
STATUS
ACTIVE
RESET
LED1
LED2
LED3
LED4
SW1
SW2
SW3
SW4

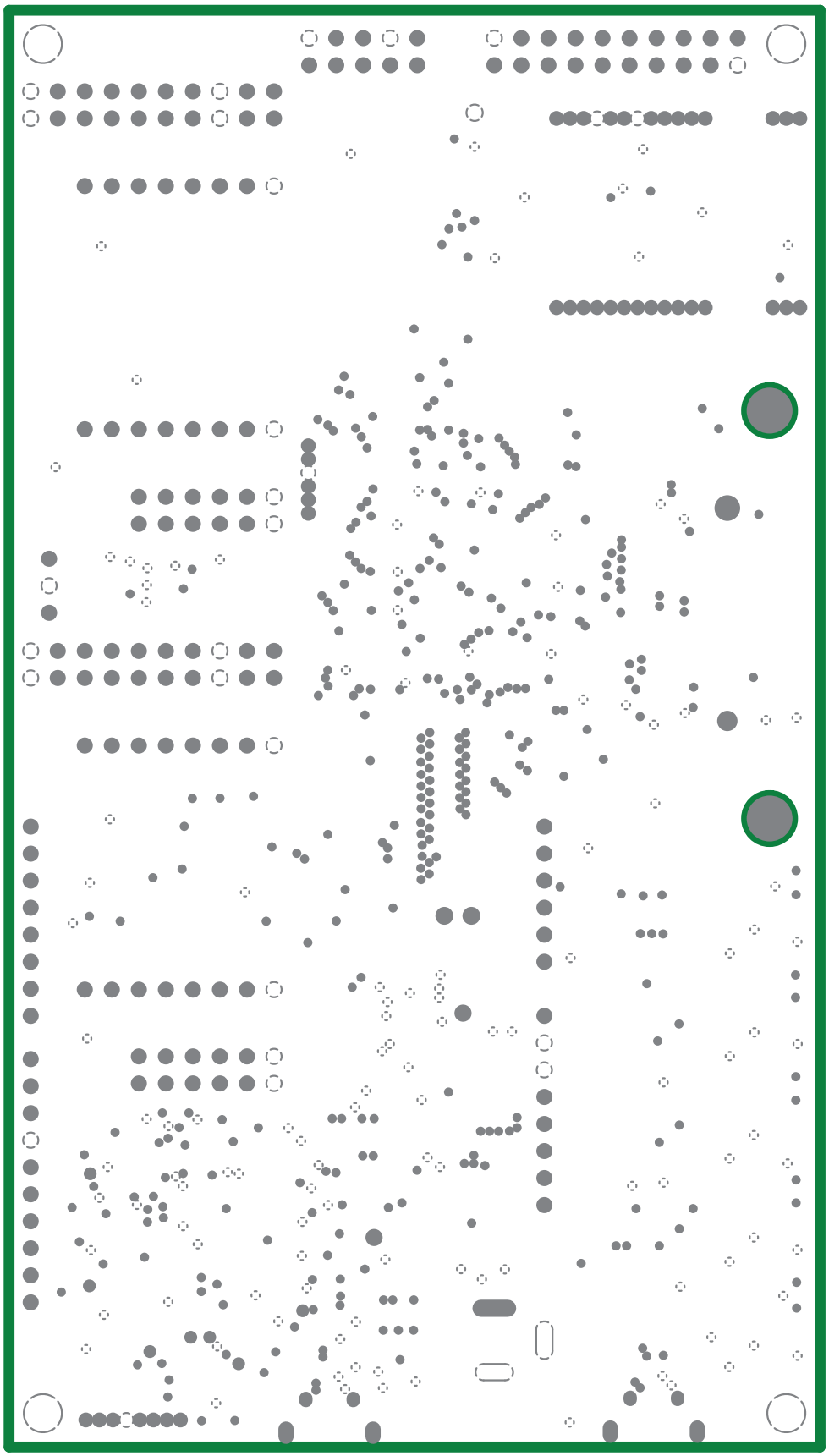

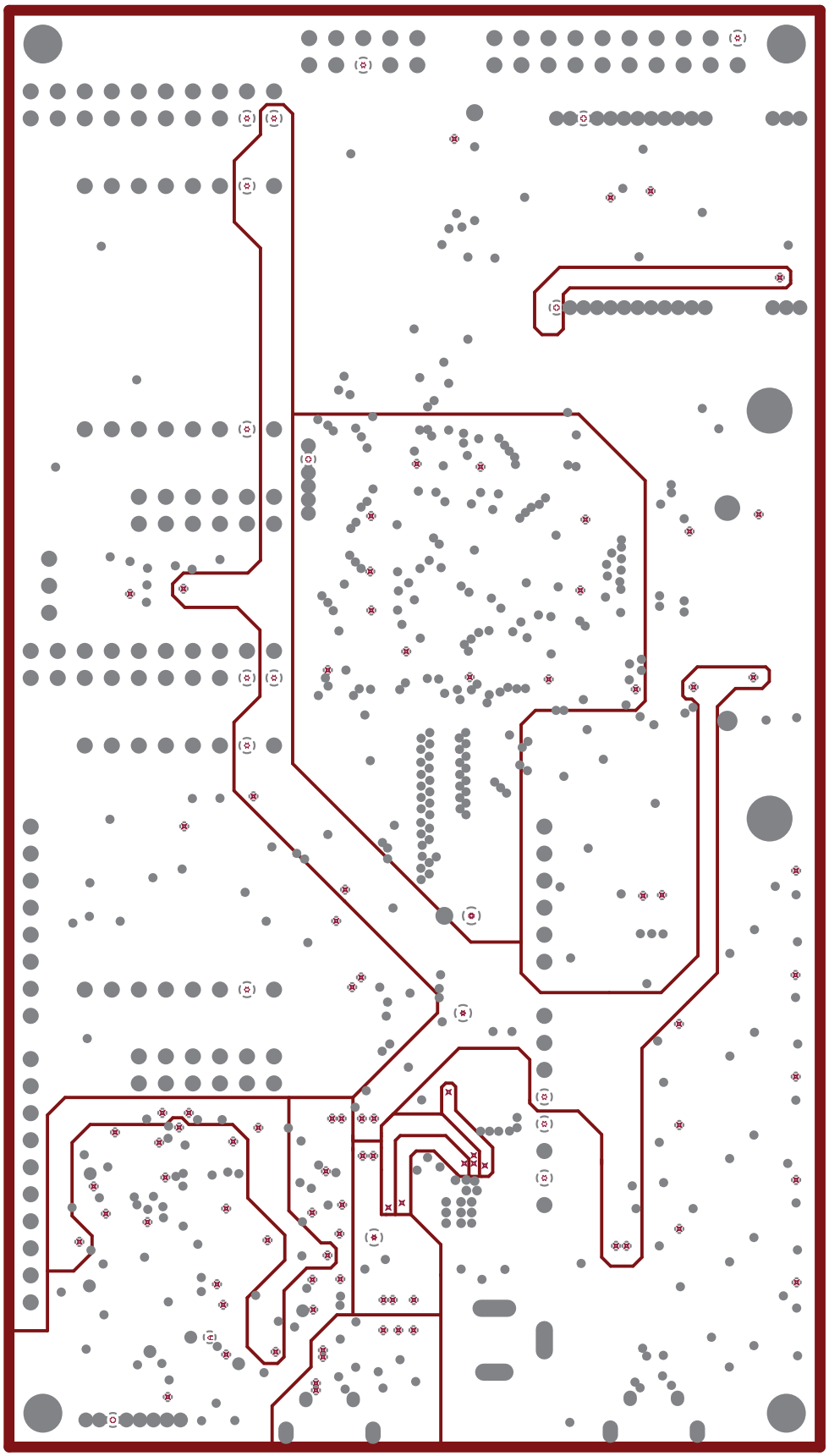

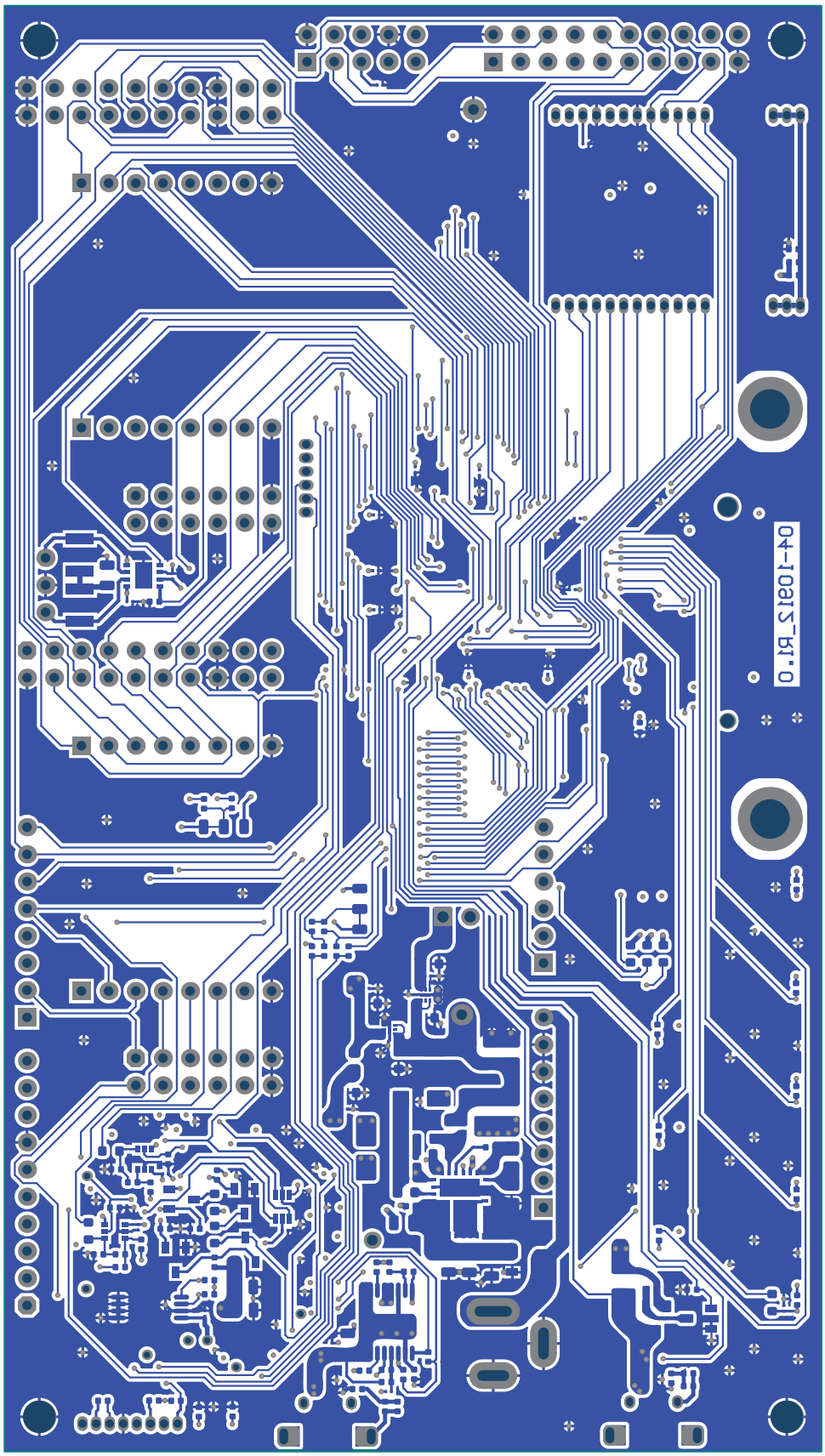
04-10812_R1.0

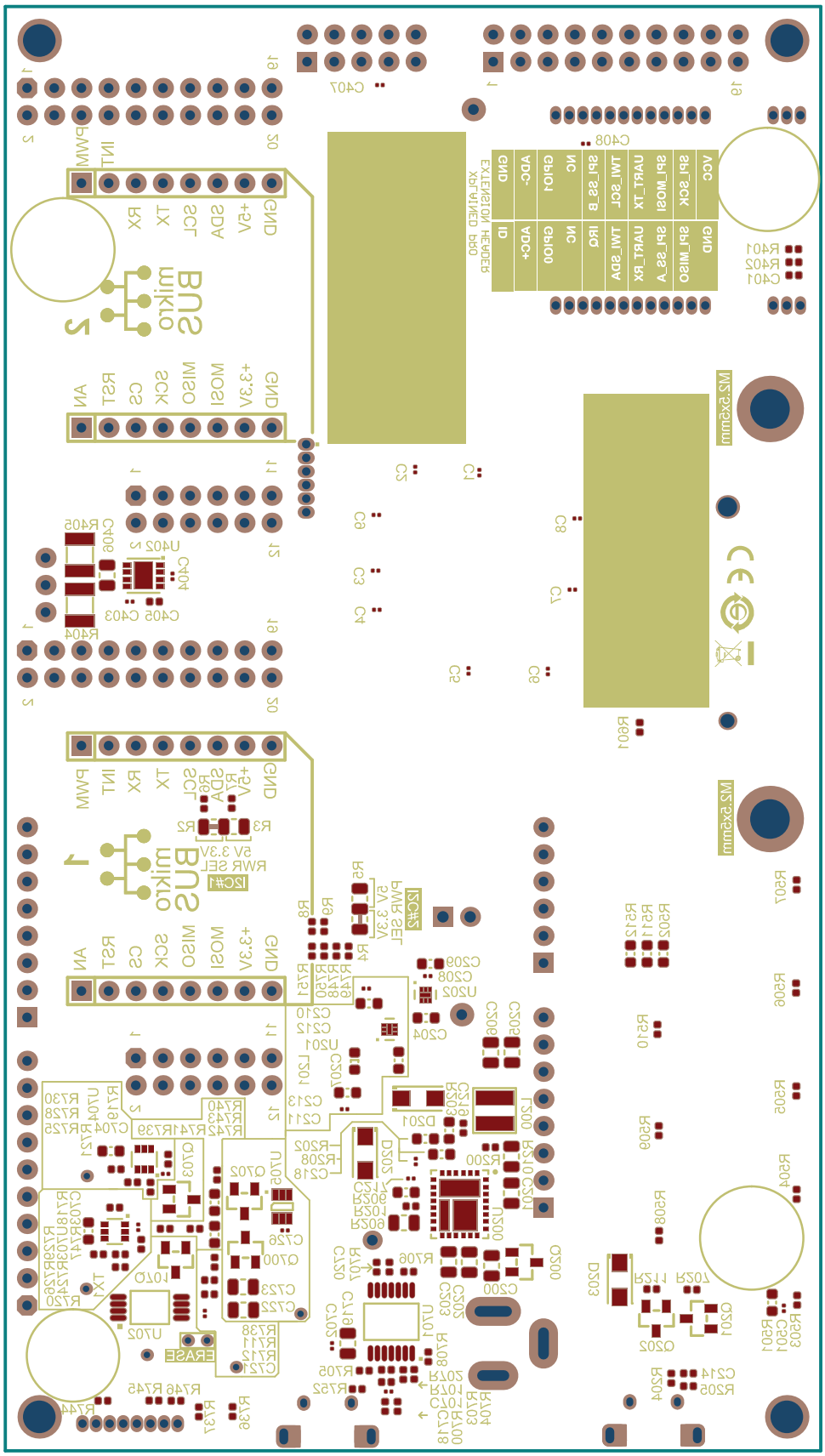

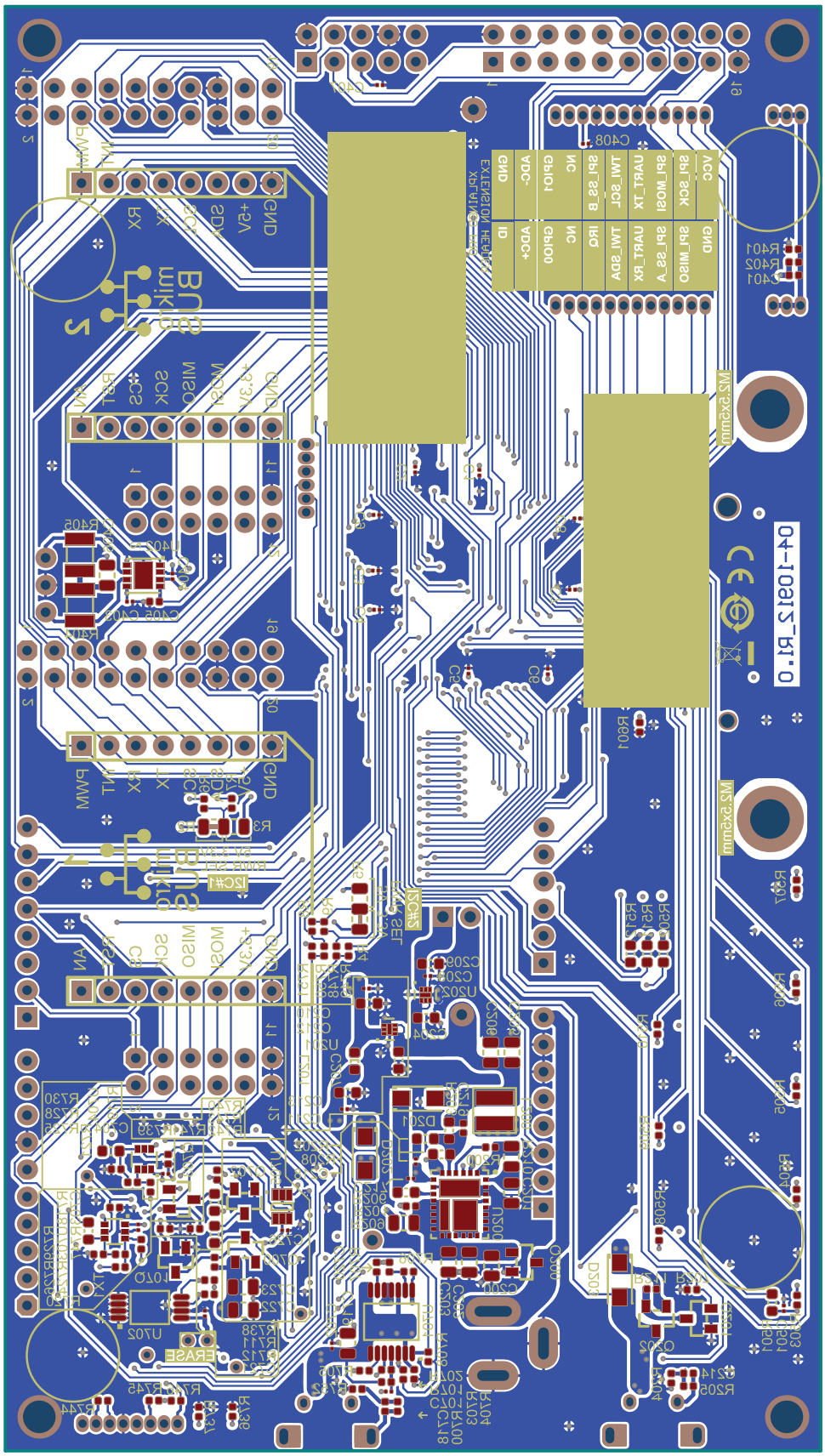

## 2.2 Bill of Materials

| Quantity | Designator | Description |
|---|---|---|
| 42 | C1, C2, C3, C4, C5, C6, C7, C8, C9, C10, C11, C208, C210, C211, C217, C218, C402, C403, C404, C407, C408, C409, C501, C701, C702, C703, C704, C705, C706, C707, C708, C709, C710, C711, C712, C713, C714, C715, C716, C717, C721, C726 | CAP CER 0.1µF 16V 10% X5R SMD 0201 |
| 1 | C200 | CAP CER 22uF 25V 20% X5R SMD 0805 |
| 1 | C201 | CAP CER 2.2uF 16V 10% X7R SMD 0805 |
| 5 | C202, C203, C406, C724, C725 | CAP CER 4.7uF 25V 10% X5R SMD 0805 |
| 6 | C204, C207, C209, C212, C213, C216 | CAP CER 1uF 16V 10% X7R SMD 0603 |
| 2 | C205, C206 | CAP CER 47uF 10V 20% X5R 0805 |
| 2 | C219, C401 | CAP CER 4700pF 50V 10% X7R SMD 0402 |
| 1 | C215 | CAP CER 0.1uF 25V 10% X7R SMD 0805 |
| 1 | C405 | CAP CER 15pF 50V 5% NP0 SMD 0402 |
| 3 | C719, C722, C723 | CAP CER 10uF 25V 10% X5R SMD 0805 |
| 1 | C720 | CAP CER 0.022uF 16V 10% X7R SMD 0402 |
| 2 | D200, D700 | DIO TVS ARRAY TPD3E001DRLR 11V 90W SMD SOT-553 |
| 3 | D201, D202, D203 | DIO SCTKY MBR230LSFT1G 430mV 2A 30V SMD SOD-123FL |
| 2 | D701, LED2 | DIO LED GREEN 2V 30mA 35mcd Clear SMD 0603 |
| 2 | D702, LED3 | DIO LED YELLOW 2.1V 20mA 6mcd Clear SMD 0603 |
| 1 | J200 | CON POWER 2.1mm 5.5mm Switch Slotted TH R/A |
| 2 | J201, J700 | CONN RCPT USB MICRO AB SMD |
| 4 | J301, J302, J305, J306 | CON HDR-2.54 Female 1x8 Tin TH VERT |
| 2 | J303, J307 | CON HDR 2.54 MALE 2x10 3u" GOLD IN CONTACT AREA MATTE TIN ON TAIL 5.84MH TH VERT |
| 2 | J304, J308 | CON HDR-2.54 Male 2x6 Gold 5.84MH TH VERT |
| 2 | J401, J402 | CON STRIP-1.27 Female 1x12 Gold TH VERT |
| 2 | J403, J404 | CON STRIP-1.27 Female 1x3 Gold TH VERT |
| 1 | J409 | CON HDR-2.54 Male 1x3 Tin 6.2MH TH R/A |
| 1 | J501 | CON HDR-2.54 Male 2x10 Gold 5.84MH TH R/A |
| 1 | J601 | CONN EDGE DUAL FEMALE 67POS 0.5mm SMD R/A |
| 1 | L200 | INDUCTOR 2.2uH 5.5A 20% SMD L4W4H2.1 |
| 1 | L201 | FERRITE 470R@100MHz 1A SMD 0603 |
| 2 | L700, L701 | FERRITE 2A 600R SMD 0805 |
| 1 | LED1 | DIO LED RED 1.8V 40mA 10mcd Clear SMD 0603 |
| 1 | LED4 | DIO LED TRI RED, GREEN, BLUE 2V, 3.2V, 3.2V 20mA, 20mA, 20mA SMD 6-PLCC |
| 2 | MH601, MH602 | MECH RND STNDFF M2.5X0.45 STEEL H2.5 |
| 5 | nMCLR, SW1, SW2, SW3, SW4 | SWITCH TACT SPST 24V 50mA KSR231GLFS SMD 6X3.5mm |
| 3 | Q200, Q202, Q700 | TRANS FET P-CH IRLML6402 -20V -3.7A 1.3W SOT-23-3 |
| 1 | R1 | RES TKF 0R 1/3W SMD 1210 |
| 4 | R6, R7, R8, R9 | RES TKF 1.8k 1% 1/10W SMD 0402 |
| 13 | R200, R201, R403, R503, R504, R505, R506, R507, R601, R703, R704, R708, R727 | RES TKF 10k 1% 1/10W SMD 0402 |

© 2019 Microchip Technology Inc.

.....continued

| Quantity | Designator | Description |
|---|---|---|
| 1 | R202 | RES TKF 19.6k 1% 1/10W SMD 0603 |
| 1 | R203 | RES TKF 2.49k 1% 1/10W SMD 0603 |
| 6 | R204, R401, R713, R749, R751, R752 | RES TKF 0R 1/16W SMD 0402 |
| 3 | R205, R402, R700 | RES TKF 1M 1% 1/10W SMD 0402 |
| 2 | R209, R210 | RES TKF 2.2R 1% 1/8W SMD 0805 AEC-Q200 |
| 5 | R207, R211, R744, R745, R746 | RES TKF 100k 1% 1/10W SMD 0402 |
| 11 | R208 | RES TKF 475R 1% 1/10W SMD 0603 |
| 1 | R214 | RES TKF 1.2R 1% 1/10W SMD 0603 |
| 2 | R404, R405 | RES TKF 62R 1% 1/2W SMD 1210 |
| 2 | R501, R502 | RES TKF 1k 1% 1/10W SMD 0603 |
| 10 | R508, R509, R510, R720, R721, R722, R723, R736, R737, R747 | RES TKF 330R 1% 1/16W SMD 0402 |
| 2 | R511, R512 | RES TKF 510R 1% 1/10W SMD 0603 |
| 1 | R701 | RES TKF 95.3k 1% 1/16W SMD 0402 |
| 2 | R702, R717 | RES TKF 5.62k 1% 1/16W SMD 0402 |
| 1 | R705 | RES TKF 470R 1% 1/16W MF 0402 |
| 1 | R706 | RES TKF 442k 1% 1/16W SMD 0402 |
| 1 | R707 | RES TKF 24.3k 1% 1/16W SMD 0402 |
| 2 | R709, R715 | RES TKF 31.6k 1% 1/10W SMD 0402 |
| 2 | R710, R716 | RES TKF 47k 5% 1/10W SMD 0402 |
| 9 | R711, R712, R726, R728, R735, R738, R739, R740, R741 | RES TKF 4.7k 1% 1/16W SMD 0402 |
| 2 | R718, R719 | RES TKF 3.3k 5% 1/10W SMD 0402 |
| 2 | R729, R730 | RES TKF 22 OHM 1% 1/10W SMD 0603 |
| 2 | R742, R743 | RES TKF 100R 5% 1/10W SMD 0603 |
| 2 | U703, U704 | IC TRANSCEIVER 74LVC1T45GW Single Bit Voltage Translator SOT-363 |
| 1 | U705 | IC SWITCH SPDT 74LVC1G3157 SC-70-6 |
| 4 | Q701, Q702, Q703, Q201 | MCHP ANALOG MOSFET N-CH TN2106 60V 280mA 360mW 2.5R SOT23-3 |
| 1 | U1 | MCHP MCU 32-BIT 2MB 512kB PIC32MZ2048EFH144-I/PH TQFP-144 |
| 1 | U200 | MCHP BUCK REGULATOR 12V 6A MIC24052 QFN-28 |
| 2 | U201, U202 | MCHP ANALOG LDO 3.3V MIC5528-3.3YMT-TR 6-TDFN |
| 1 | U401 | MCHP MEMORY SERIAL FLASH 64M 104MHz SOIJ8 |
| 1 | U402 | MCHP INTERFACE CAN ATA6563-GBQW1 VDFN-8 |
| 1 | U700 | MCHP MCU 32-BIT 300MHz 2MB 384kB ATSAME70N21B-ANT LQFP-100 |
| 1 | U701 | MCHP ANALOG POWER SWITCH 5.5V 3A MIC2042-1YTS TSSOP-14 |
| 1 | U702 | MCHP MEMORY SERIAL EEPROM 256k I2C 24LC256-E/ST TSSOP-8 |
| 2 | X700, Y1 | MCHP CLOCK OSCILLATOR SINGLE 12.000MHZ DSC6011JI1A-012.0000 VLGA |
| 1 | Y2 | MCHP CLOCK OSCILLATOR SINGLE 32.768Hz DSC6083CE2A-032K768 SMD DFN-4 |
| 1 | Y401 | MCHP CLOCK OSCILLATOR 50MHz DSC1001CI2-050.0000T DFN-4 |
| 4 | PAD1, PAD2, PAD3, PAD4 | MECH HW RUBBER PAD CYLINDRICAL D9.53H5.97 |
| DNP | J701 | CON HDR-1.27 Female 1x8 TH VERT |
| DNP | J1 | CON HDR-2.54 Male 1X2 Gold 6mm MH TH R/A |

© 2019 Microchip Technology Inc.

| .....continued | | |
|---|---|---|
| **Quantity** | **Designator** | **Description** |
| DNP | J405, J408 | CON HDR-2.54 Female 1x8 Tin TH VERT |
| DNP | J406 | CON HDR-2.54 Female 1x6 Gold TH |
| DNP | J407 | CON HDR-2.54 Female 1x10 Gold TH VERT |
| DNP | J410 | CON HDR-2.54 Female 2x5 GOLD TH R/A |
| DNP | R724, R725, R748, R750 | RES TKF 0R 1/16W SMD 0402 |
| DNP | C214, C718 | CAP CER 4700pF 50V 10% X7R SMD 0402 |
| DNP | GND | MISC, TEST POINT MULTI PURPOSE MINI BLK |
| DNP | +5V | MISC, TEST POINT MULTI PURPOSE MINI RED |
| DNP | J702 | CON HDR-1.27 Female 1x6 Gold TH VERT |
| DNP | R2, R3, R4, R5 | RES TKF 0R 1/16W SMD 0805 |
| DNP | R731, R732, R733, R734 | RES TKF 4.7k 1% 1/16W SMD 0402 |
| DNP | DAT_EN, ERASE, MH1, MH2, MH3, MH4, RX1, TP1, TP2, TP3V3, TX1, 5V0 | Non-populated Test Points |

## 2.3 Board Dimensions

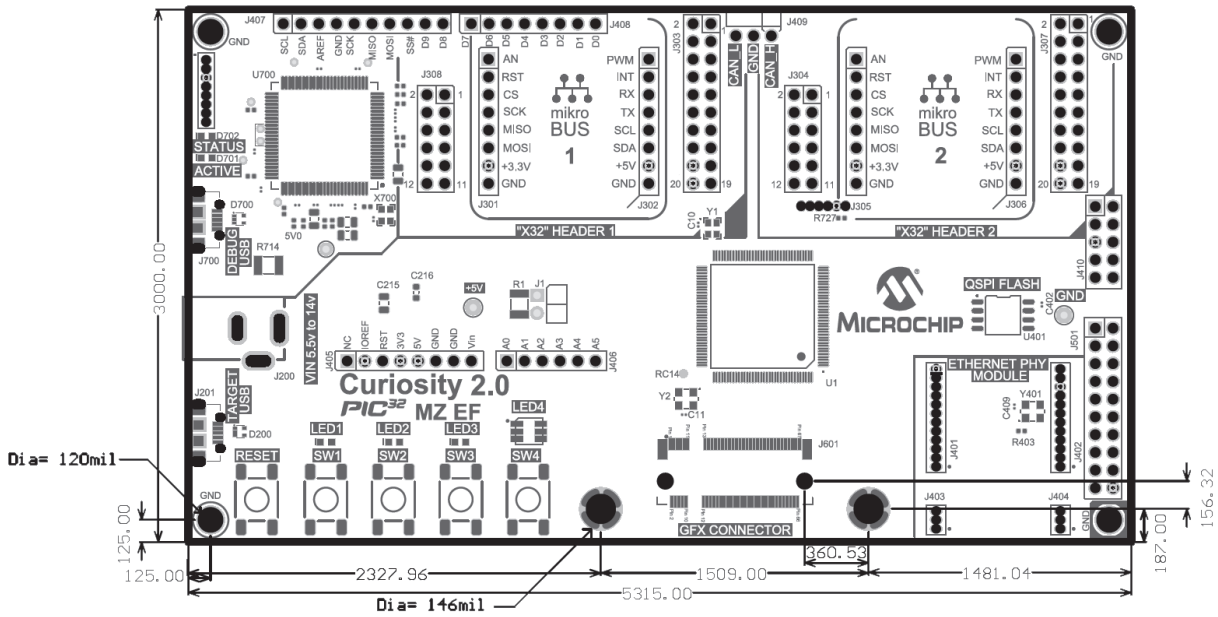

## The Microchip Web Site

Microchip provides online support via our web site at http://www.microchip.com/. This web site is used as a means to make files and information easily available to customers. Accessible by using your favorite Internet browser, the web site contains the following information:

- **Product Support** – Data sheets and errata, application notes and sample programs, design resources, user's guides and hardware support documents, latest software releases and archived software
- **General Technical Support** – Frequently Asked Questions (FAQ), technical support requests, online discussion groups, Microchip consultant program member listing
- **Business of Microchip** – Product selector and ordering guides, latest Microchip press releases, listing of seminars and events, listings of Microchip sales offices, distributors and factory representatives

## Customer Change Notification Service

Microchip's customer notification service helps keep customers current on Microchip products. Subscribers will receive e-mail notification whenever there are changes, updates, revisions or errata related to a specified product family or development tool of interest.

To register, access the Microchip web site at http://www.microchip.com/. Under "Support", click on "Customer Change Notification" and follow the registration instructions.

## Customer Support

Users of Microchip products can receive assistance through several channels:

- Distributor or Representative
- Local Sales Office
- Field Application Engineer (FAE)
- Technical Support

Customers should contact their distributor, representative or Field Application Engineer (FAE) for support. Local sales offices are also available to help customers. A listing of sales offices and locations is included in the back of this document.

Technical support is available through the web site at: http://www.microchip.com/support

## Microchip Devices Code Protection Feature

Note the following details of the code protection feature on Microchip devices:

- Microchip products meet the specification contained in their particular Microchip Data Sheet.
- Microchip believes that its family of products is one of the most secure families of its kind on the market today, when used in the intended manner and under normal conditions.
- There are dishonest and possibly illegal methods used to breach the code protection feature. All of these methods, to our knowledge, require using the Microchip products in a manner outside the operating specifications contained in Microchip's Data Sheets. Most likely, the person doing so is engaged in theft of intellectual property.
- Microchip is willing to work with the customer who is concerned about the integrity of their code.
- Neither Microchip nor any other semiconductor manufacturer can guarantee the security of their code. Code protection does not mean that we are guaranteeing the product as "unbreakable."

Code protection is constantly evolving. We at Microchip are committed to continuously improving the code protection features of our products. Attempts to break Microchip's code protection feature may be a violation of the Digital Millennium Copyright Act. If such acts allow unauthorized access to your software or other copyrighted work, you may have a right to sue for relief under that Act.

© 2019 Microchip Technology Inc.

## Legal Notice

Information contained in this publication regarding device applications and the like is provided only for your convenience and may be superseded by updates. It is your responsibility to ensure that your application meets with your specifications. MICROCHIP MAKES NO REPRESENTATIONS OR WARRANTIES OF ANY KIND WHETHER EXPRESS OR IMPLIED, WRITTEN OR ORAL, STATUTORY OR OTHERWISE, RELATED TO THE INFORMATION, INCLUDING BUT NOT LIMITED TO ITS CONDITION, QUALITY, PERFORMANCE, MERCHANTABILITY OR FITNESS FOR PURPOSE. Microchip disclaims all liability arising from this information and its use. Use of Microchip devices in life support and/or safety applications is entirely at the buyer's risk, and the buyer agrees to defend, indemnify and hold harmless Microchip from any and all damages, claims, suits, or expenses resulting from such use. No licenses are conveyed, implicitly or otherwise, under any Microchip intellectual property rights unless otherwise stated.

## Trademarks

The Microchip name and logo, the Microchip logo, AnyRate, AVR, AVR logo, AVR Freaks, BitCloud, chipKIT, chipKIT logo, CryptoMemory, CryptoRF, dsPIC, FlashFlex, flexPWR, Heldo, JukeBlox, KeeLoq, Kleer, LANCheck, LINK MD, maXStylus, maXTouch, MediaLB, megaAVR, MOST, MOST logo, MPLAB, OptoLyzer, PIC, picoPower, PICSTART, PIC32 logo, Prochip Designer, QTouch, SAM-BA, SpyNIC, SST, SST Logo, SuperFlash, tinyAVR, UNI/O, and XMEGA are registered trademarks of Microchip Technology Incorporated in the U.S.A. and other countries.

ClockWorks, The Embedded Control Solutions Company, EtherSynch, Hyper Speed Control, HyperLight Load, IntelliMOS, mTouch, Precision Edge, and Quiet-Wire are registered trademarks of Microchip Technology Incorporated in the U.S.A.

Adjacent Key Suppression, AKS, Analog-for-the-Digital Age, Any Capacitor, AnyIn, AnyOut, BodyCom, CodeGuard, CryptoAuthentication, CryptoAutomotive, CryptoCompanion, CryptoController, dsPICDEM, dsPICDEM.net, Dynamic Average Matching, DAM, ECAN, EtherGREEN, In-Circuit Serial Programming, ICSP, INICnet, Inter-Chip Connectivity, JitterBlocker, KleerNet, KleerNet logo, memBrain, Mindi, MiWi, motorBench, MPASM, MPF, MPLAB Certified logo, MPLIB, MPLINK, MultiTRAK, NetDetach, Omniscient Code Generation, PICDEM, PICDEM.net, PICkit, PICtail, PowerSmart, PureSilicon, QMatrix, REAL ICE, Ripple Blocker, SAM-ICE, Serial Quad I/O, SMART-I.S., SQI, SuperSwitcher, SuperSwitcher II, Total Endurance, TSHARC, USBCheck, VariSense, ViewSpan, WiperLock, Wireless DNA, and ZENA are trademarks of Microchip Technology Incorporated in the U.S.A. and other countries.

SQTP is a service mark of Microchip Technology Incorporated in the U.S.A.

Silicon Storage Technology is a registered trademark of Microchip Technology Inc. in other countries.

GestIC is a registered trademark of Microchip Technology Germany II GmbH & Co. KG, a subsidiary of Microchip Technology Inc., in other countries.

All other trademarks mentioned herein are property of their respective companies.

© 2019, Microchip Technology Incorporated, Printed in the U.S.A., All Rights Reserved.

ISBN: 978-1-5224-4834-1

## Quality Management System Certified by DNV

**ISO/TS 16949**

Microchip received ISO/TS-16949:2009 certification for its worldwide headquarters, design and wafer fabrication facilities in Chandler and Tempe, Arizona; Gresham, Oregon and design centers in California and India. The Company's quality system processes and procedures are for its PIC® MCUs and dsPIC® DSCs, KEELOQ® code hopping devices, Serial EEPROMs, microperipherals, nonvolatile memory and analog products. In addition, Microchip's quality system for the design and manufacture of development systems is ISO 9001:2000 certified.

# Worldwide Sales and Service

| AMERICAS | ASIA/PACIFIC | ASIA/PACIFIC | EUROPE |
|---|---|---|---|
| **Corporate Office**<br>2355 West Chandler Blvd.<br>Chandler, AZ 85224-6199<br>Tel: 480-792-7200<br>Fax: 480-792-7277<br>Technical Support:<br>http://www.microchip.com/support<br>Web Address:<br>www.microchip.com<br>**Atlanta**<br>Duluth, GA<br>Tel: 678-957-9614<br>Fax: 678-957-1455<br>**Austin, TX**<br>Tel: 512-257-3370<br>**Boston**<br>Westborough, MA<br>Tel: 774-760-0087<br>Fax: 774-760-0088<br>**Chicago**<br>Itasca, IL<br>Tel: 630-285-0071<br>Fax: 630-285-0075<br>**Dallas**<br>Addison, TX<br>Tel: 972-818-7423<br>Fax: 972-818-2924<br>**Detroit**<br>Novi, MI<br>Tel: 248-848-4000<br>**Houston, TX**<br>Tel: 281-894-5983<br>**Indianapolis**<br>Noblesville, IN<br>Tel: 317-773-8323<br>Fax: 317-773-5453<br>Tel: 317-536-2380<br>**Los Angeles**<br>Mission Viejo, CA<br>Tel: 949-462-9523<br>Fax: 949-462-9608<br>Tel: 951-273-7800<br>**Raleigh, NC**<br>Tel: 919-844-7510<br>**New York, NY**<br>Tel: 631-435-6000<br>**San Jose, CA**<br>Tel: 408-735-9110<br>Tel: 408-436-4270<br>**Canada - Toronto**<br>Tel: 905-695-1980<br>Fax: 905-695-2078 | **Australia - Sydney**<br>Tel: 61-2-9868-6733<br>**China - Beijing**<br>Tel: 86-10-8569-7000<br>**China - Chengdu**<br>Tel: 86-28-8665-5511<br>**China - Chongqing**<br>Tel: 86-23-8980-9588<br>**China - Dongguan**<br>Tel: 86-769-8702-9880<br>**China - Guangzhou**<br>Tel: 86-20-8755-8029<br>**China - Hangzhou**<br>Tel: 86-571-8792-8115<br>**China - Hong Kong SAR**<br>Tel: 852-2943-5100<br>**China - Nanjing**<br>Tel: 86-25-8473-2460<br>**China - Qingdao**<br>Tel: 86-532-8502-7355<br>**China - Shanghai**<br>Tel: 86-21-3326-8000<br>**China - Shenyang**<br>Tel: 86-24-2334-2829<br>**China - Shenzhen**<br>Tel: 86-755-8864-2200<br>**China - Suzhou**<br>Tel: 86-186-6233-1526<br>**China - Wuhan**<br>Tel: 86-27-5980-5300<br>**China - Xian**<br>Tel: 86-29-8833-7252<br>**China - Xiamen**<br>Tel: 86-592-2388138<br>**China - Zhuhai**<br>Tel: 86-756-3210040 | **India - Bangalore**<br>Tel: 91-80-3090-4444<br>**India - New Delhi**<br>Tel: 91-11-4160-8631<br>**India - Pune**<br>Tel: 91-20-4121-0141<br>**Japan - Osaka**<br>Tel: 81-6-6152-7160<br>**Japan - Tokyo**<br>Tel: 81-3-6880- 3770<br>**Korea - Daegu**<br>Tel: 82-53-744-4301<br>**Korea - Seoul**<br>Tel: 82-2-554-7200<br>**Malaysia - Kuala Lumpur**<br>Tel: 60-3-7651-7906<br>**Malaysia - Penang**<br>Tel: 60-4-227-8870<br>**Philippines - Manila**<br>Tel: 63-2-634-9065<br>**Singapore**<br>Tel: 65-6334-8870<br>**Taiwan - Hsin Chu**<br>Tel: 886-3-577-8366<br>**Taiwan - Kaohsiung**<br>Tel: 886-7-213-7830<br>**Taiwan - Taipei**<br>Tel: 886-2-2508-8600<br>**Thailand - Bangkok**<br>Tel: 66-2-694-1351<br>**Vietnam - Ho Chi Minh**<br>Tel: 84-28-5448-2100 | **Austria - Wels**<br>Tel: 43-7242-2244-39<br>Fax: 43-7242-2244-393<br>**Denmark - Copenhagen**<br>Tel: 45-4450-2828<br>Fax: 45-4485-2829<br>**Finland - Espoo**<br>Tel: 358-9-4520-820<br>**France - Paris**<br>Tel: 33-1-69-53-63-20<br>Fax: 33-1-69-30-90-79<br>**Germany - Garching**<br>Tel: 49-8931-9700<br>**Germany - Haan**<br>Tel: 49-2129-3766400<br>**Germany - Heilbronn**<br>Tel: 49-7131-67-3636<br>**Germany - Karlsruhe**<br>Tel: 49-721-625370<br>**Germany - Munich**<br>Tel: 49-89-627-144-0<br>Fax: 49-89-627-144-44<br>**Germany - Rosenheim**<br>Tel: 49-8031-354-560<br>**Israel - Ra'anana**<br>Tel: 972-9-744-7705<br>**Italy - Milan**<br>Tel: 39-0331-742611<br>Fax: 39-0331-466781<br>**Italy - Padova**<br>Tel: 39-049-7625286<br>**Netherlands - Drunen**<br>Tel: 31-416-690399<br>Fax: 31-416-690340<br>**Norway - Trondheim**<br>Tel: 47-72884388<br>**Poland - Warsaw**<br>Tel: 48-22-3325737<br>**Romania - Bucharest**<br>Tel: 40-21-407-87-50<br>**Spain - Madrid**<br>Tel: 34-91-708-08-90<br>Fax: 34-91-708-08-91<br>**Sweden - Gothenberg**<br>Tel: 46-31-704-60-40<br>**Sweden - Stockholm**<br>Tel: 46-8-5090-4654<br>**UK - Wokingham**<br>Tel: 44-118-921-5800<br>Fax: 44-118-921-5820 |

© 2019 Microchip Technology Inc.

# Mouser Electronics

Authorized Distributor

Click to View Pricing, Inventory, Delivery & Lifecycle Information:

Microchip:
DM320209