AZZA

ONE VISION.ONE MISSION

Pyramid

INNOVATIVE TREMPERED GLASS GAMING CASE

CSAZ-804L

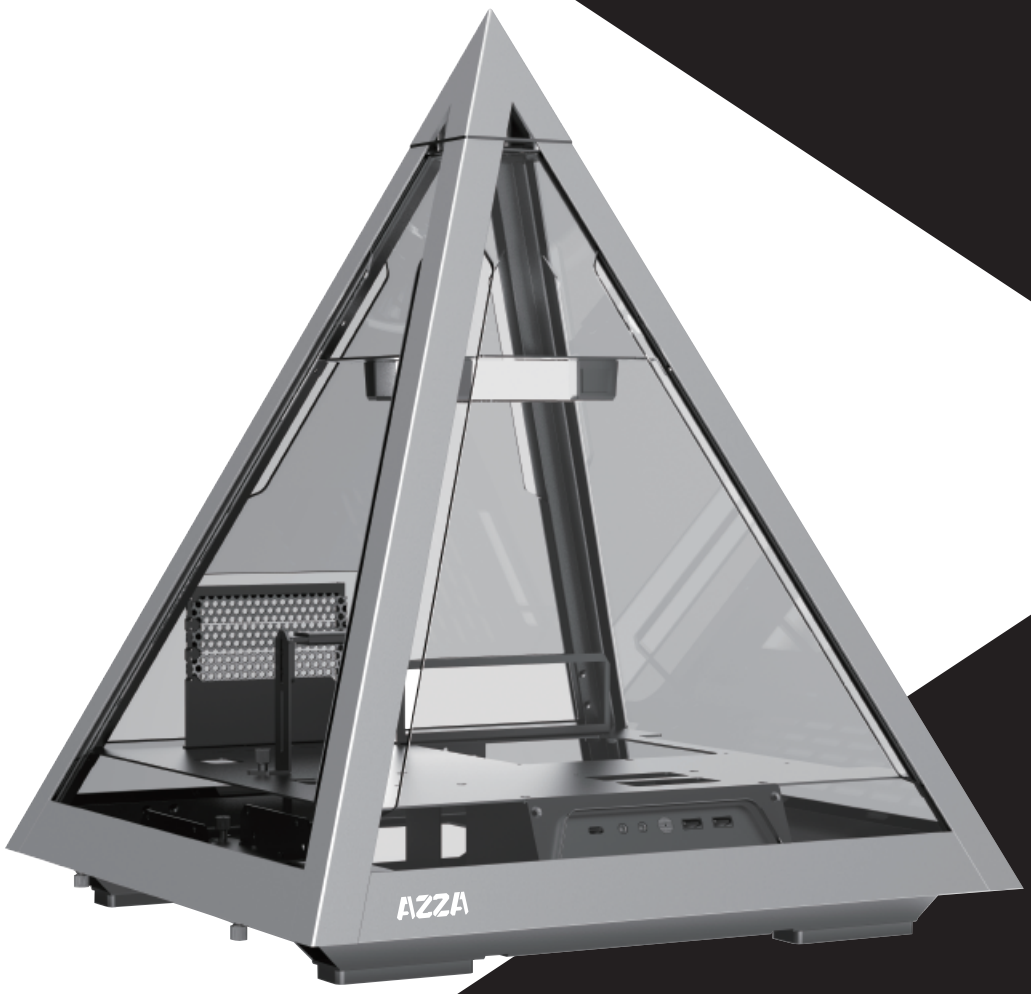

USER MANUAL

1. Specifications
2. Chassis Parts
3. Removing The Top Glass Panel
4. Overview
5. Power Supply Installation
6. 2.5"SSD / 3.5"HDD Installation
7. PCI-E Cable
8. Fan Installation
9. Digital RGB Fan Installation For Motherboard

Specifications

Model	
Model Name:	PYRAMID 804L
Model Number:	CSAZ-804L
Specifications	
Type:	ATX Tower
Color:	1.5~2.0mm SPCC+ 2.5mm Aluminum
Side Panel Window:	4 sides panel are tempered glass
Max. CPU Cooler Height:	UP to 95mm
Max. GPU Length:	L=330 mm / W=150 mm / H=70 mm (Horizontal)
Power Supply:	ATX
Motherboard Compatibility:	<305x280mm E-ATX 、ATX、Micro ATX、Mini-ITX
Expansion	
External 5.25" Drive Bays:	0
Internal 2.5" Drive Bays:	Up to 2
Internal 3.5" Drive Bays:	Up to 1 (Convertible with 2.5"SSDx1)
Expansion Slots:	3
Front Ports:	2xUSB 3.0、 HD Audio、Type C、Metal power button
Physical Specifications	
Metal Chassis Dimensions (HxWxD)	558x490x490/22x19.3x19.3 inch
Dimendion with Case Stand(HxWxD)	585x490x490mm/23x19.3x19.3 inch
Weight:	14.1kg /31.1lbs
Features	
Tempered Glass Side Window:	High-quality tempered glass side window allows for clear visuals to inner components.
Available Fan Ports:	1 x 120mm or 1x140 fan ports in the top(1 x 120mm Hurricane II Digital RGB Fan included) 6 x 120mm fan ports on the bottom
Water Cooling:	Supports radiator up to 360mm on the botton.
Isolated Chamber:	ATX Power supply inside its own isolated chamber, preventing its heat from affecting other components.
Easy Installation Cooler:	A pre-cut hole for easy installation of CPU Cooler, eliminating the need to remove the motherboard.
Accessories:	20cm PCI-E 3.0 extension cable for VGA card(Support EATX 、ATX MB) Adjustable video card holder

Chassis parts

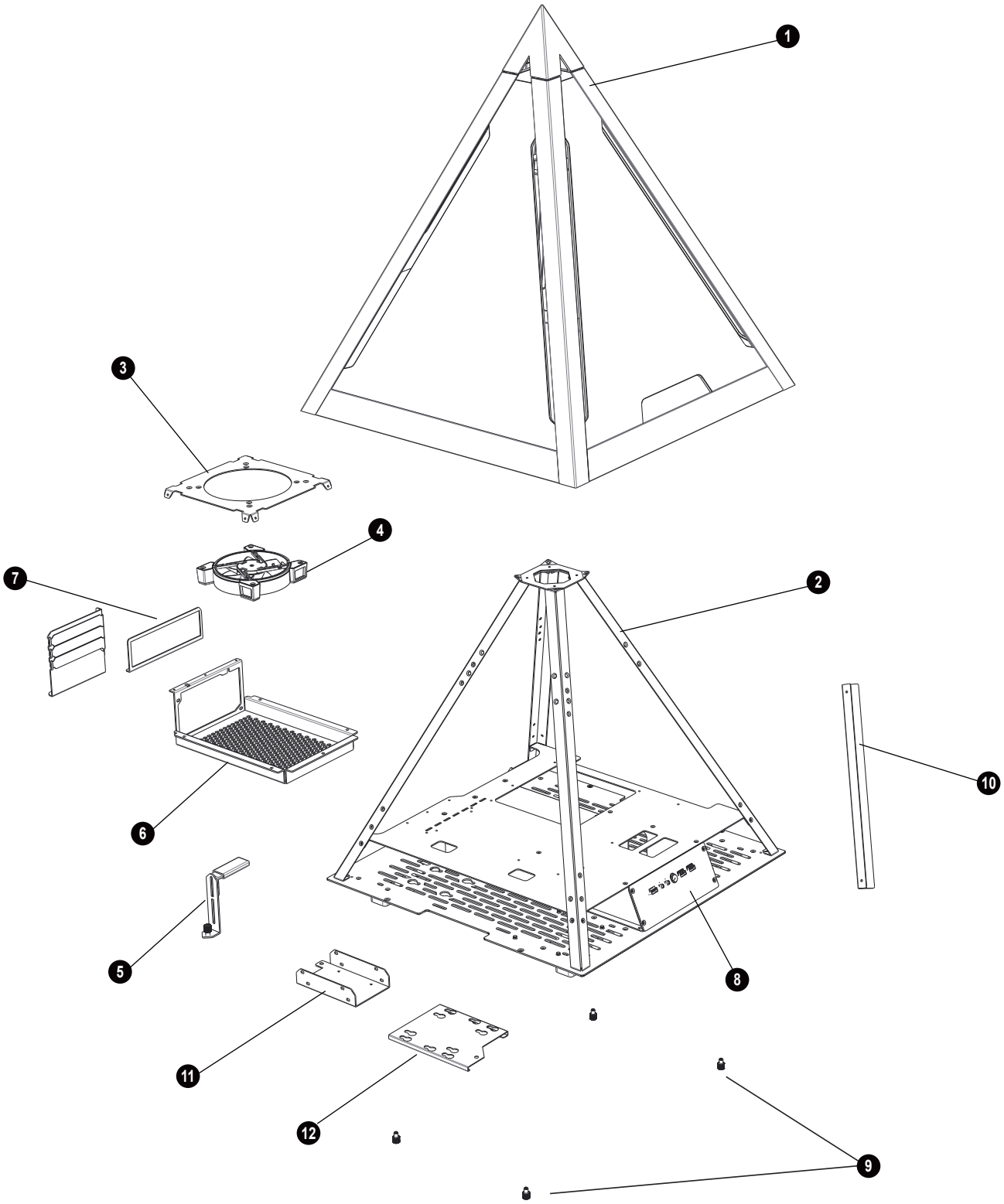

1	TOP tempered glass panel cover	7	Horizontal PCIe slot
2	Pyramid structure	8	I/O Ports: USB 3.0 x 2 , Type C, HD Audio
3	120mm/140mm fan bracket	9	Spring bolt screw of top panel cover
4	12cm ARGB Fan	10	Fan cable management cover
5	Adiustable video card holder	11	2.5"SSD brackets X1
6	Power supply rack	12	3.5"HDD /2.5"SSD spring bolt tray X1

Removing The Top Glass Panel

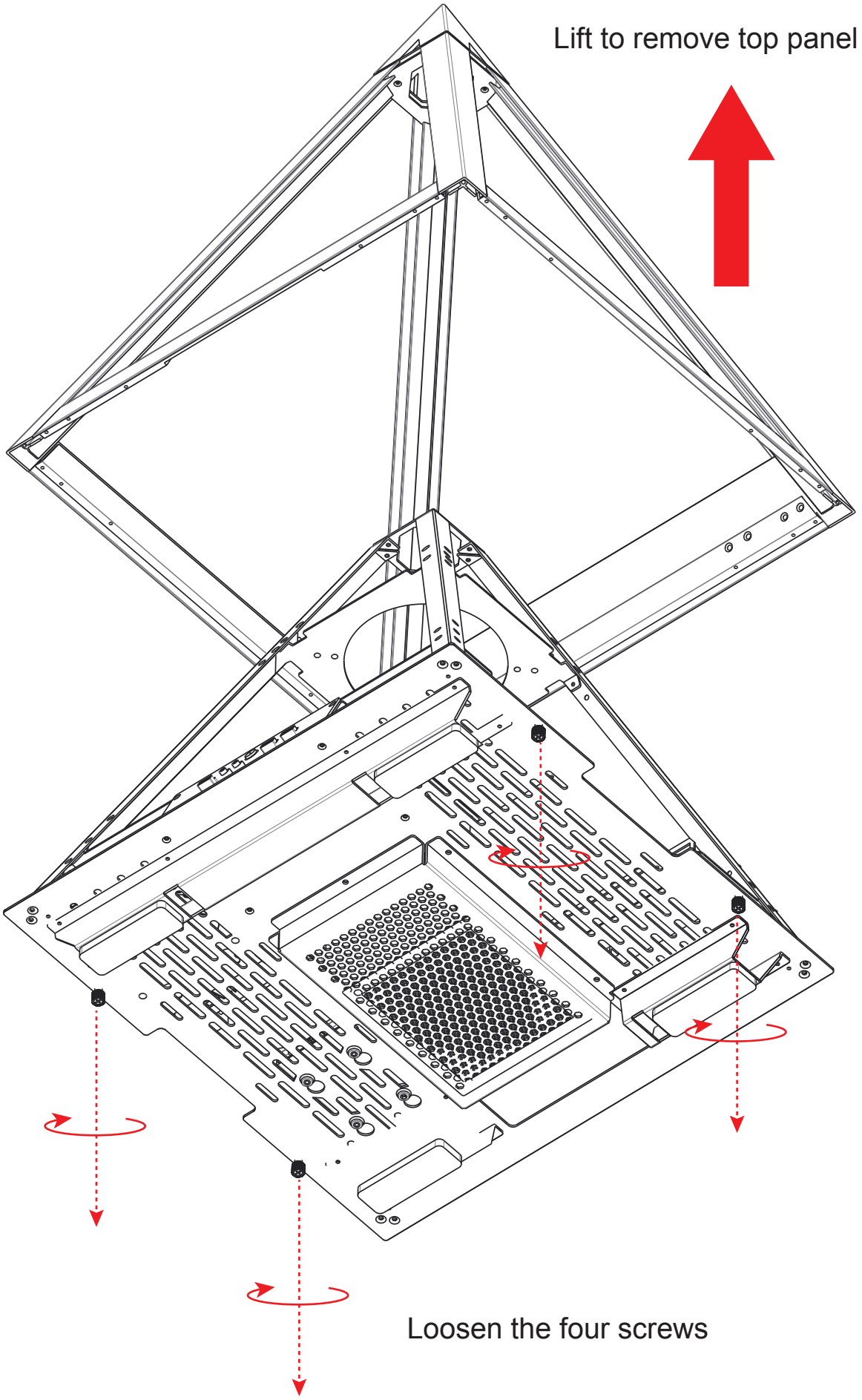

Overview

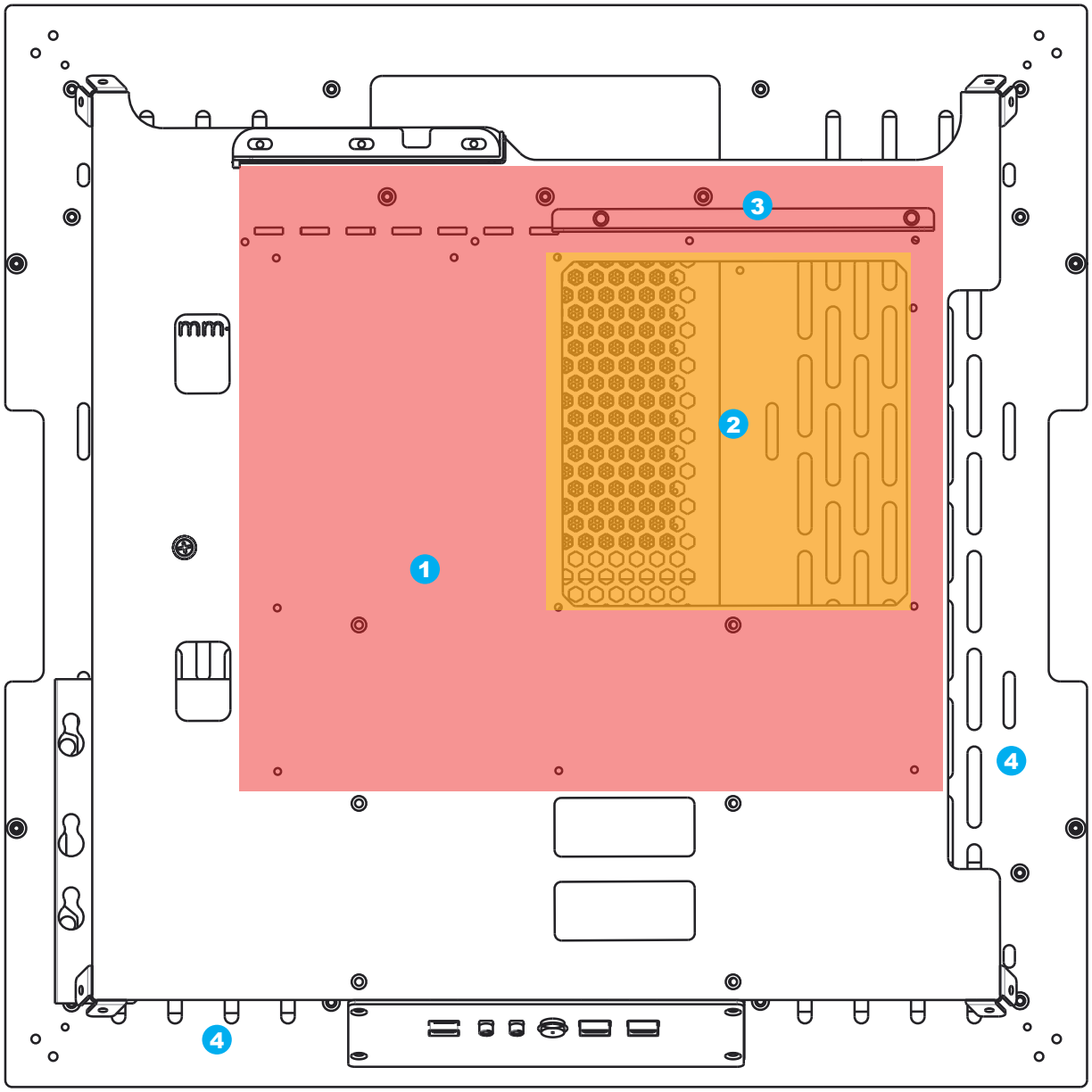

1. motherboard mount
2. Pre-cut hole for CPU cooling
3. Power cord management hole
4. Water radiator management hole

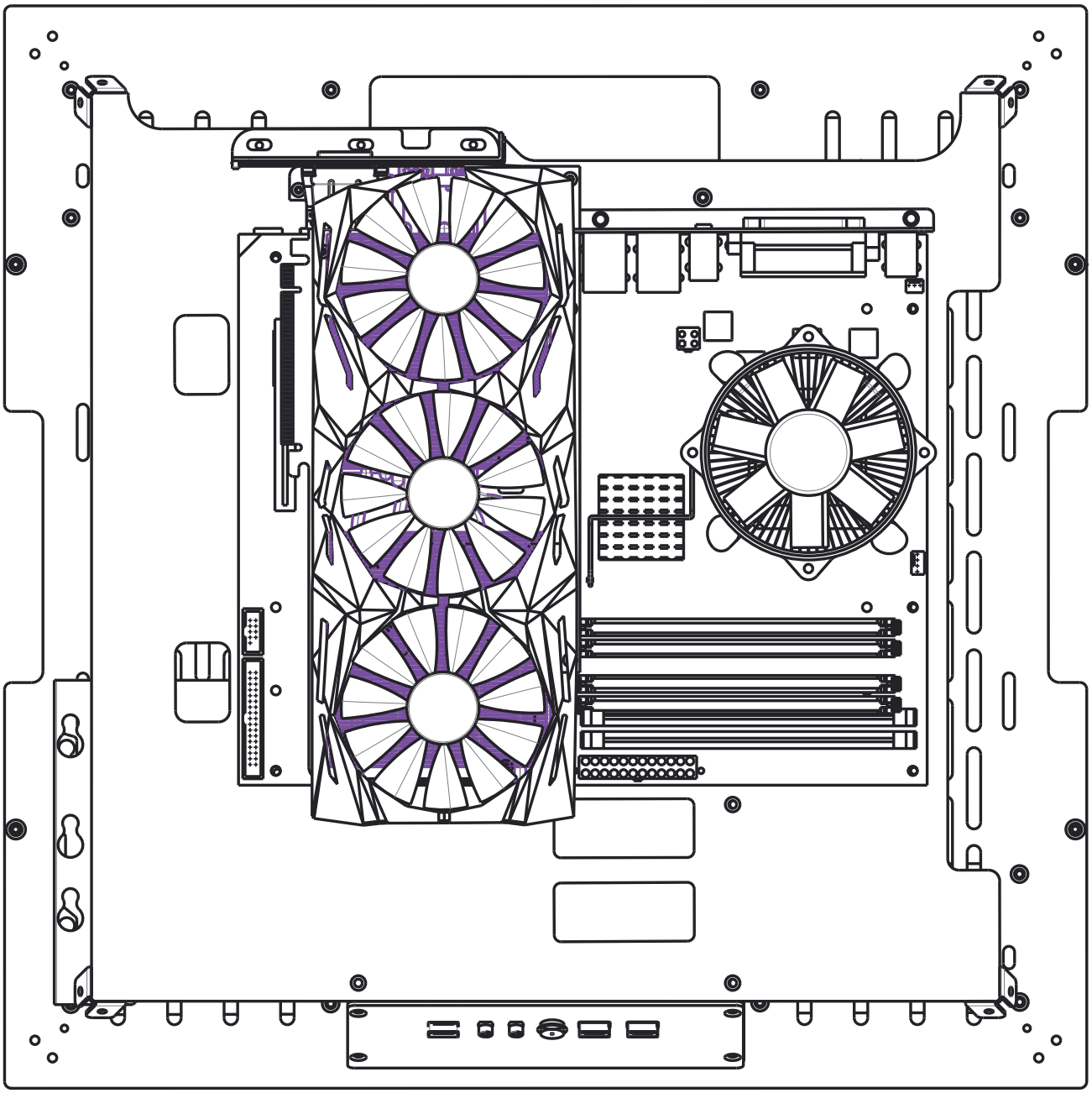

Power Supply Installation

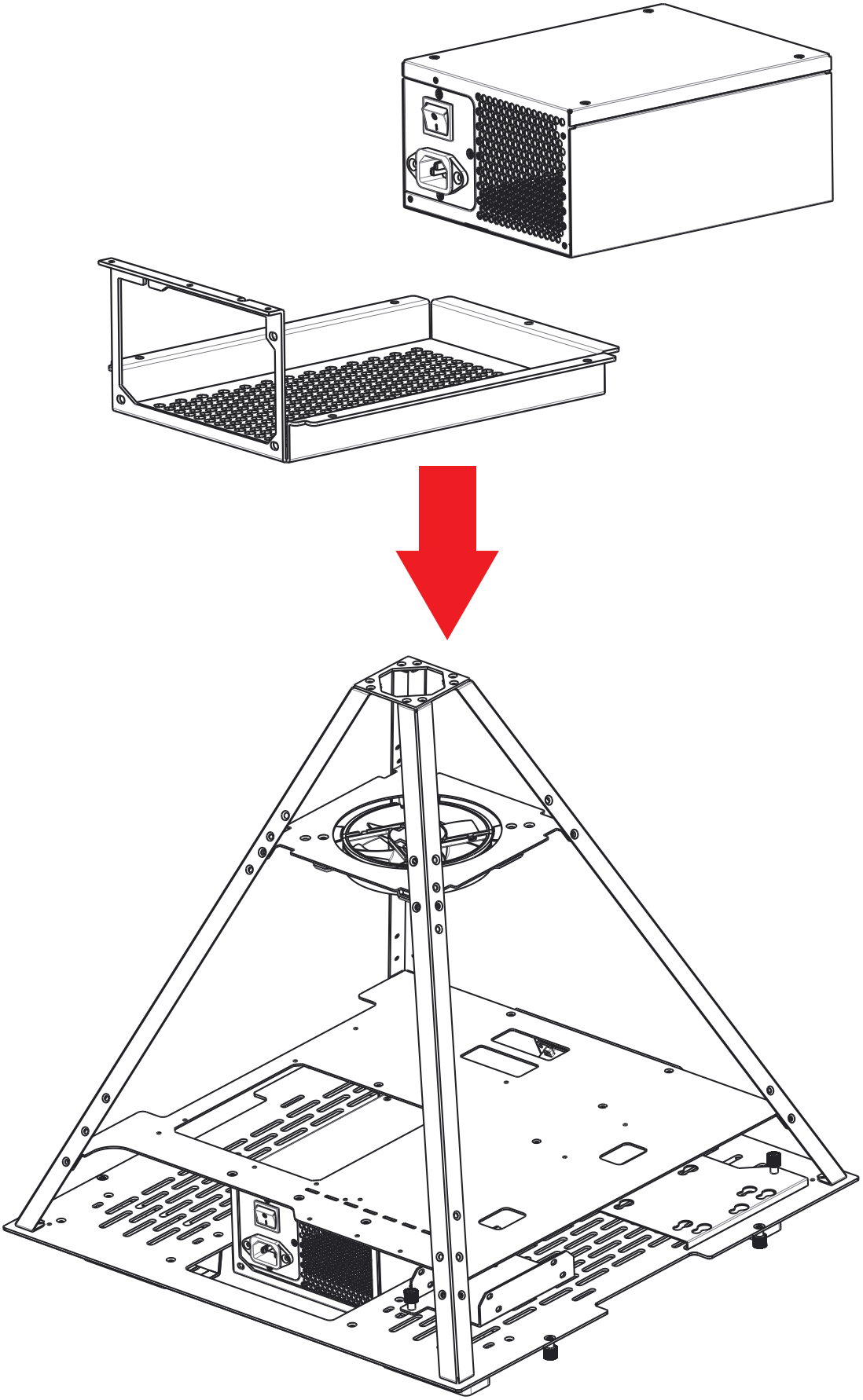

2.5"SSD / 3.5"HDD Installation

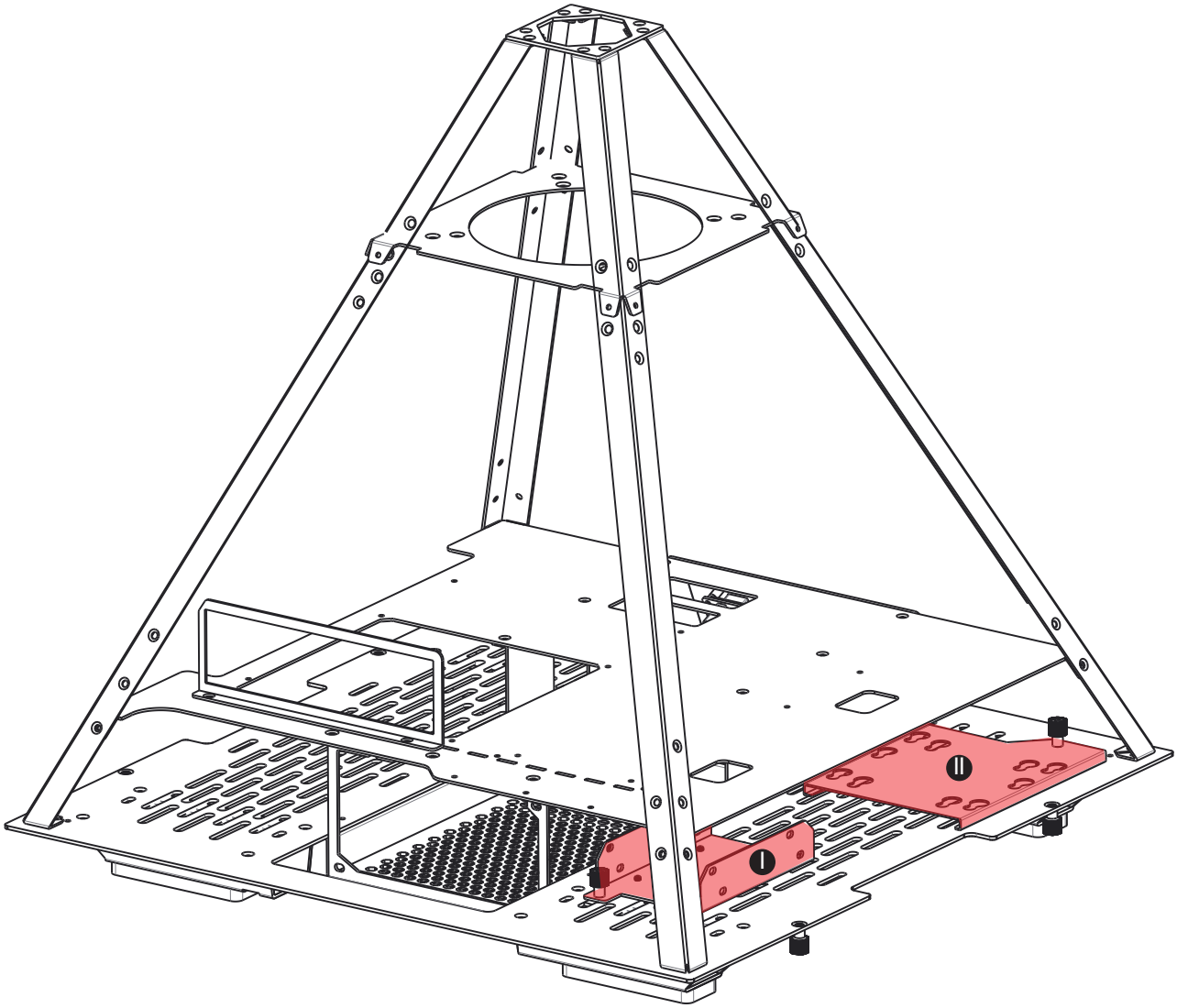

(I) 2.5" SSD spring bolt tray: Supports up to 2.5" SSD x 2

(II) 3.5" HDD spring bolt tray: Supports 3.5 HDD x 1
(also compatible with a 2.5" SSD)

Supports up to 3 x 120mm fan or 360mm radiator on the hard drive bay

PCI-E Cable

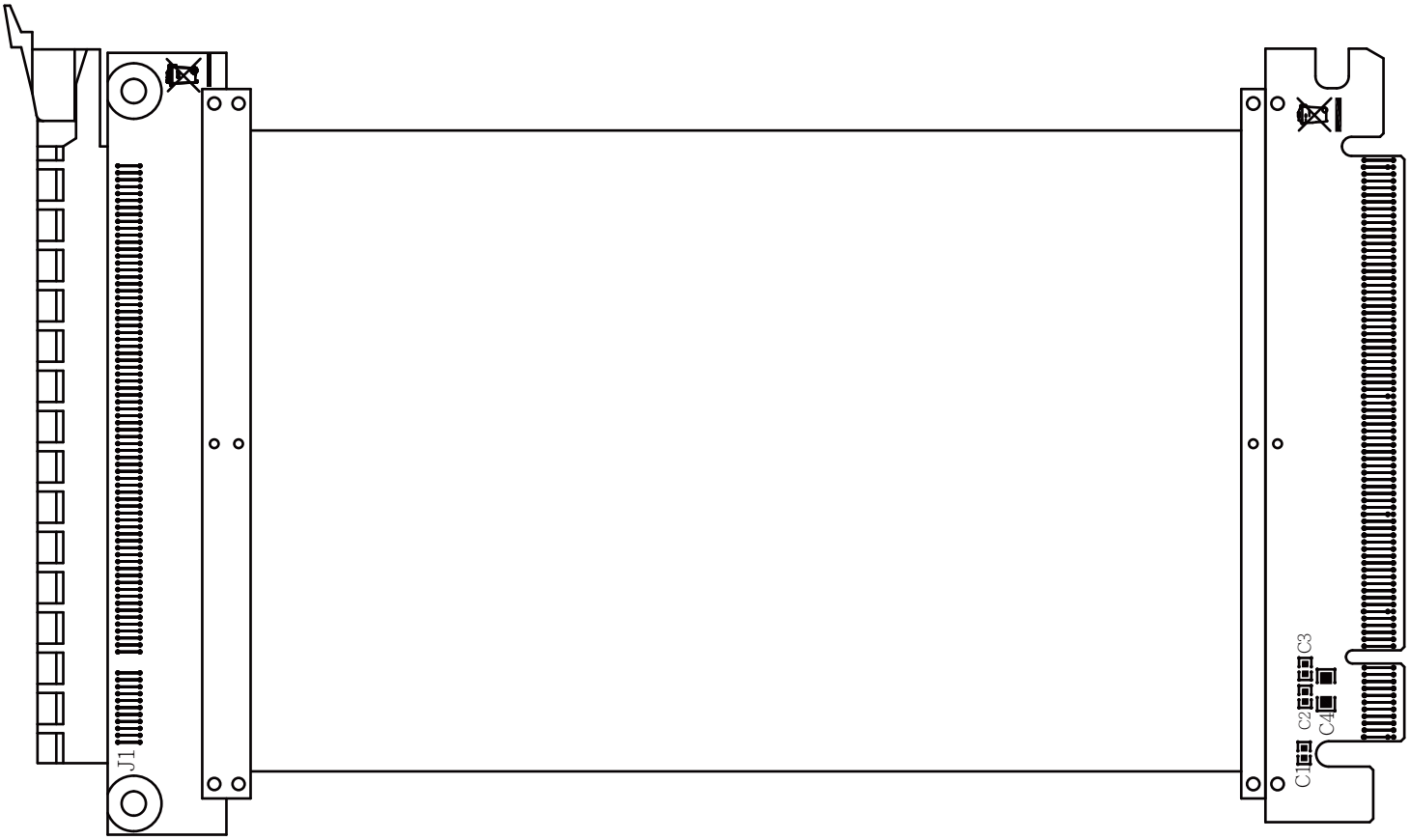

200 mm PCI-E 3.0 Cable(Support EATX、ATX Motherboard)

Fan Installation

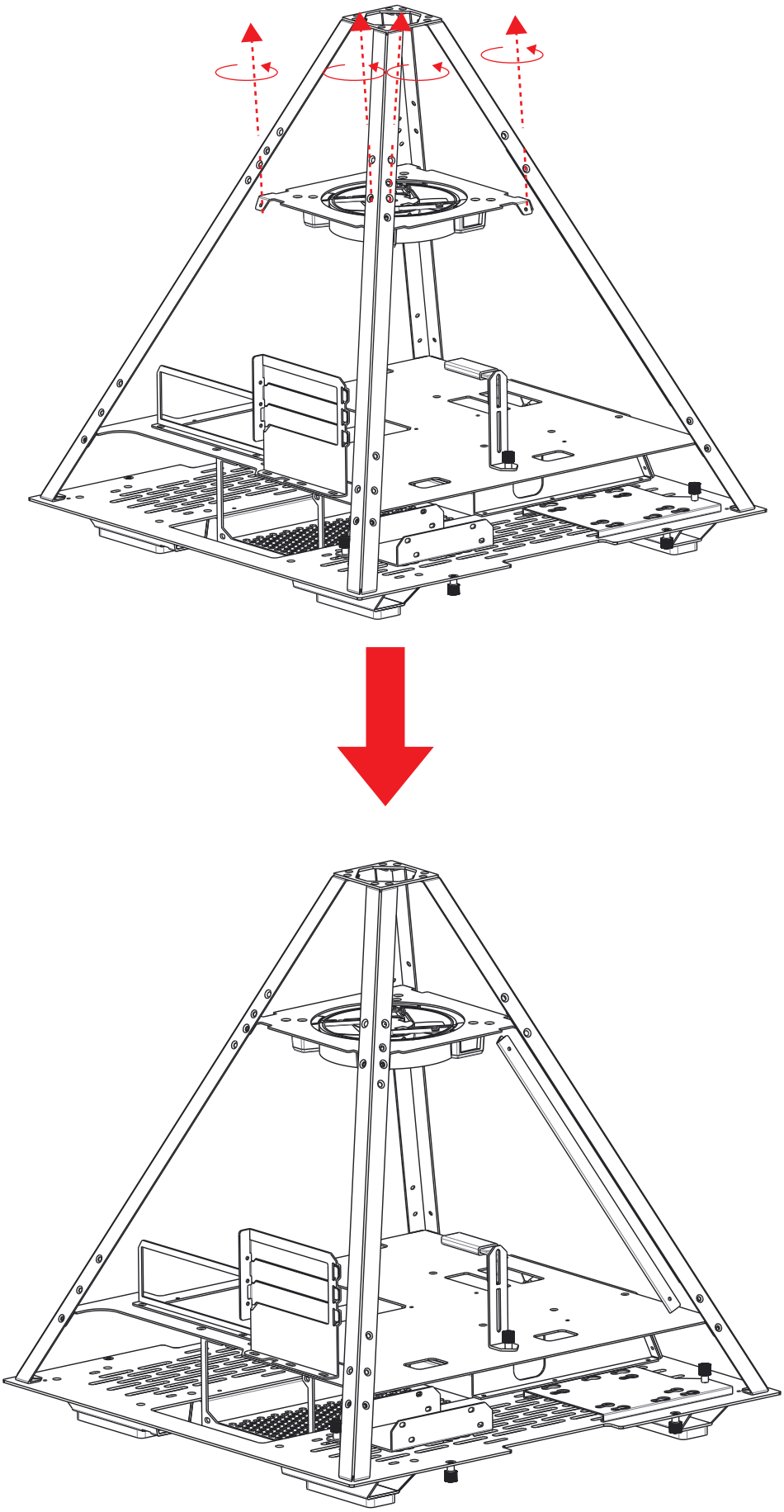

Digital RGB Fan Installation For Motherboard

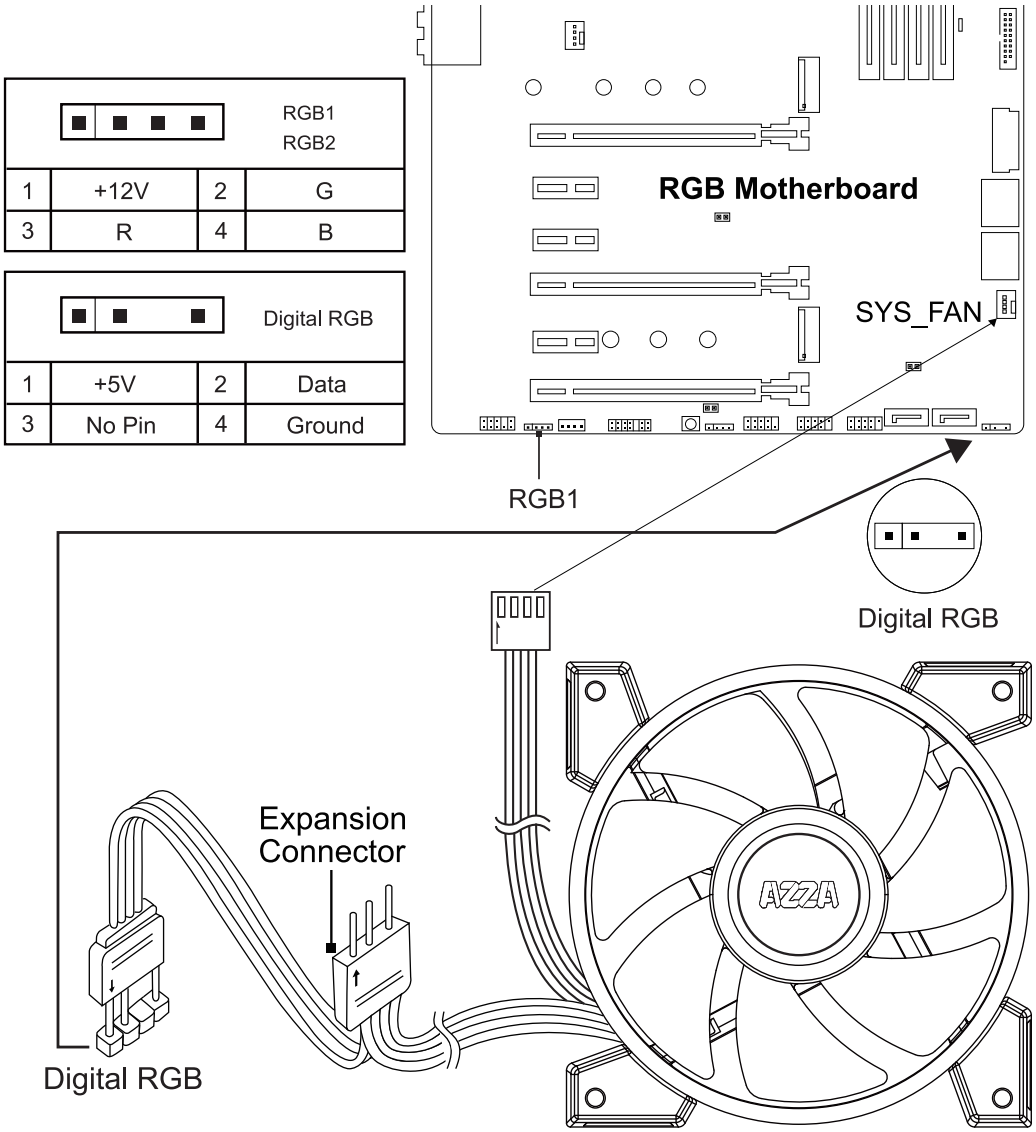

The addressable RGB fans can connect directly to the 5V addressable RGB headers of compatible motherboards, such as those from MSI™, ASUS™, Gigabyte™ and AsRock™.

Please note: Only 5V addressable headers from compatible motherboards are supported. Please do NOT connect the fan to a 12V non-addressable header.

Please check your motherboard’s specifications before use. Do not go past the motherboard’s allowed limits on power rating and LED count when connecting multiple fans/LED strips.

AZZA

ONE VISION.ONE MISSION