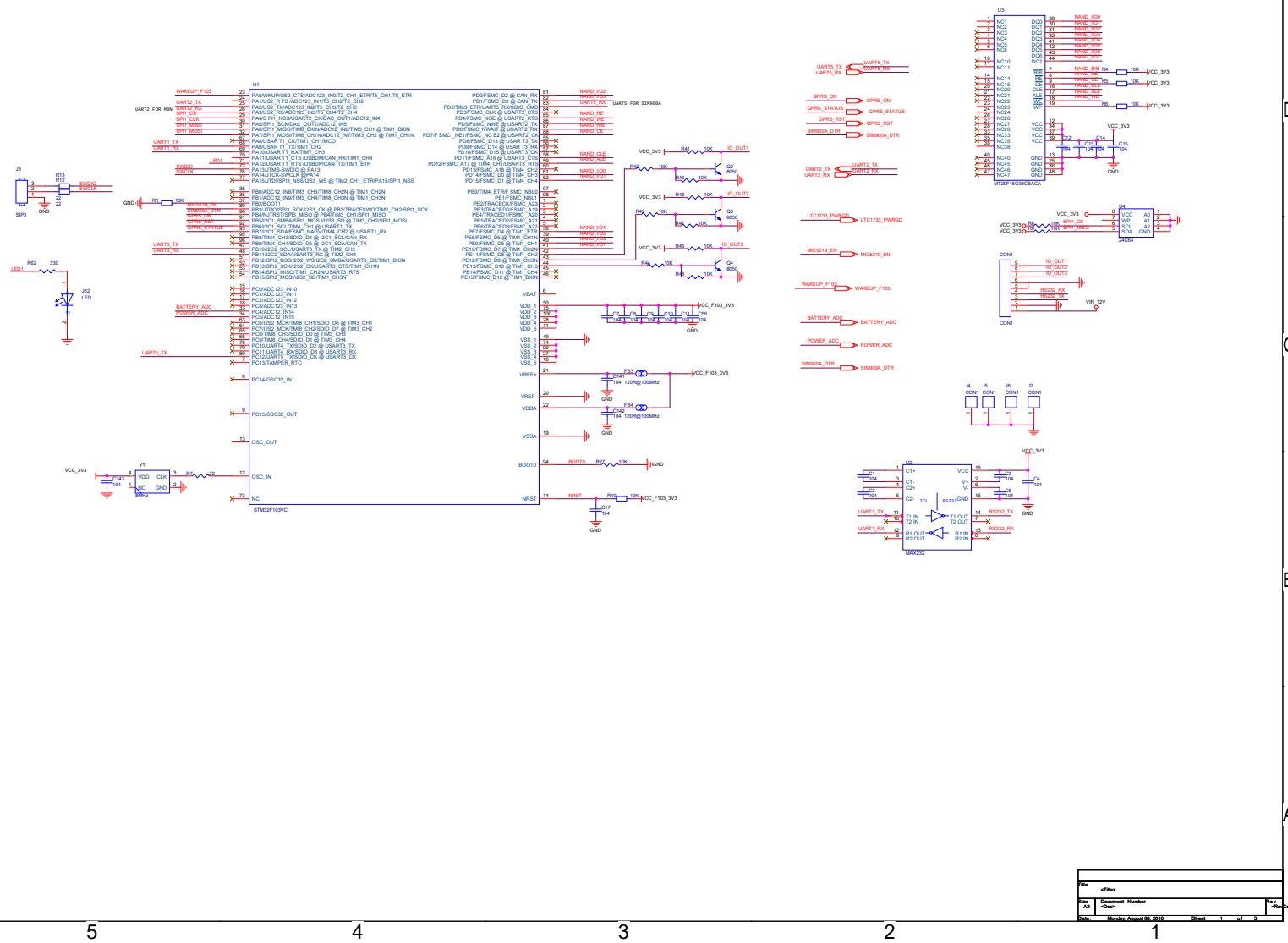

Title	<Title>
Size A2	Document Number <Doc>
Rev	<RevCode>
Date: Monday, August 08, 2016	Sheet 1 of 3

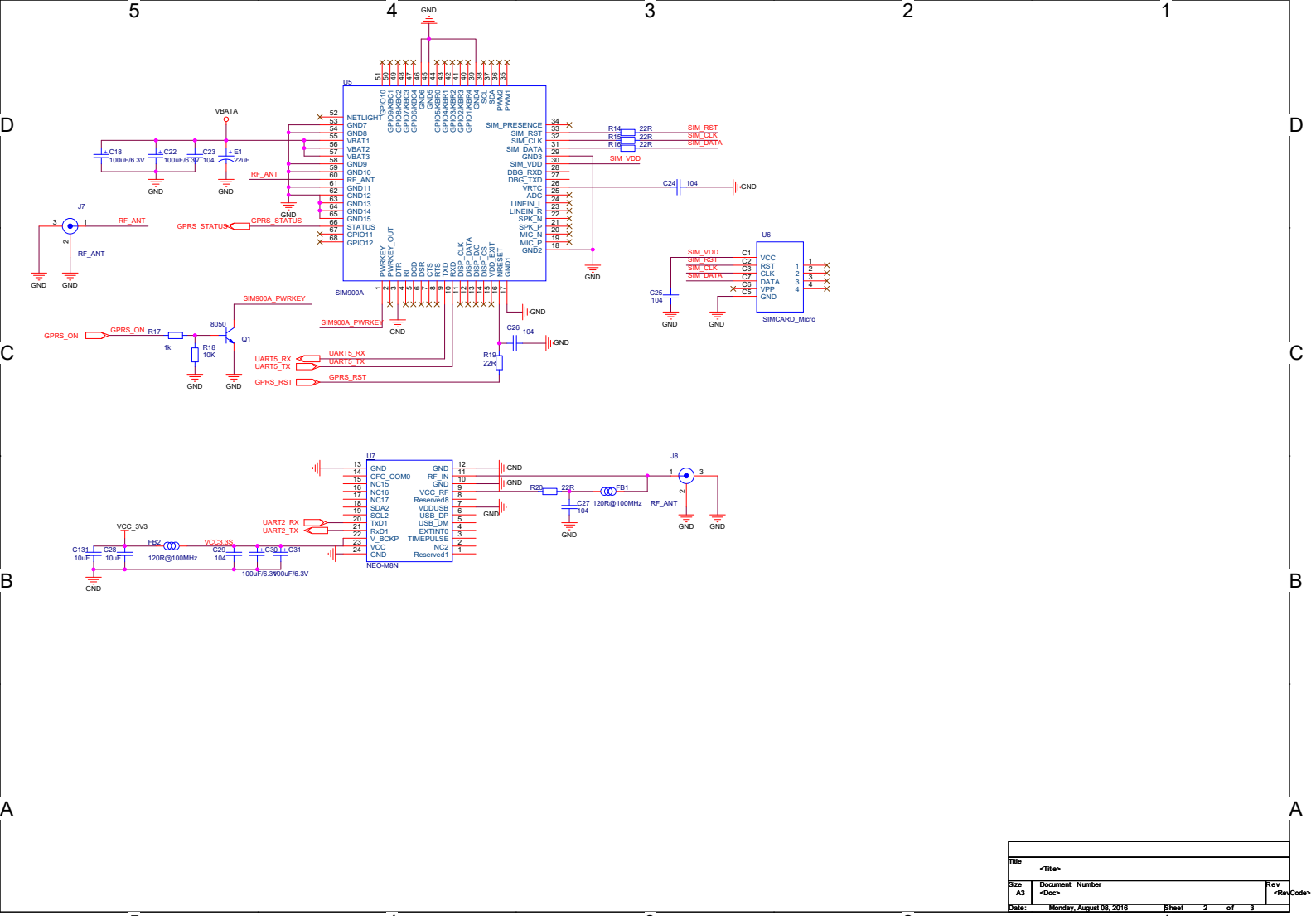

Title	<Title>		
Size A3	Document Number <Doc>		Rev <RevCode>
Date: Monday, August 08, 2016		Sheet 2 of 3	

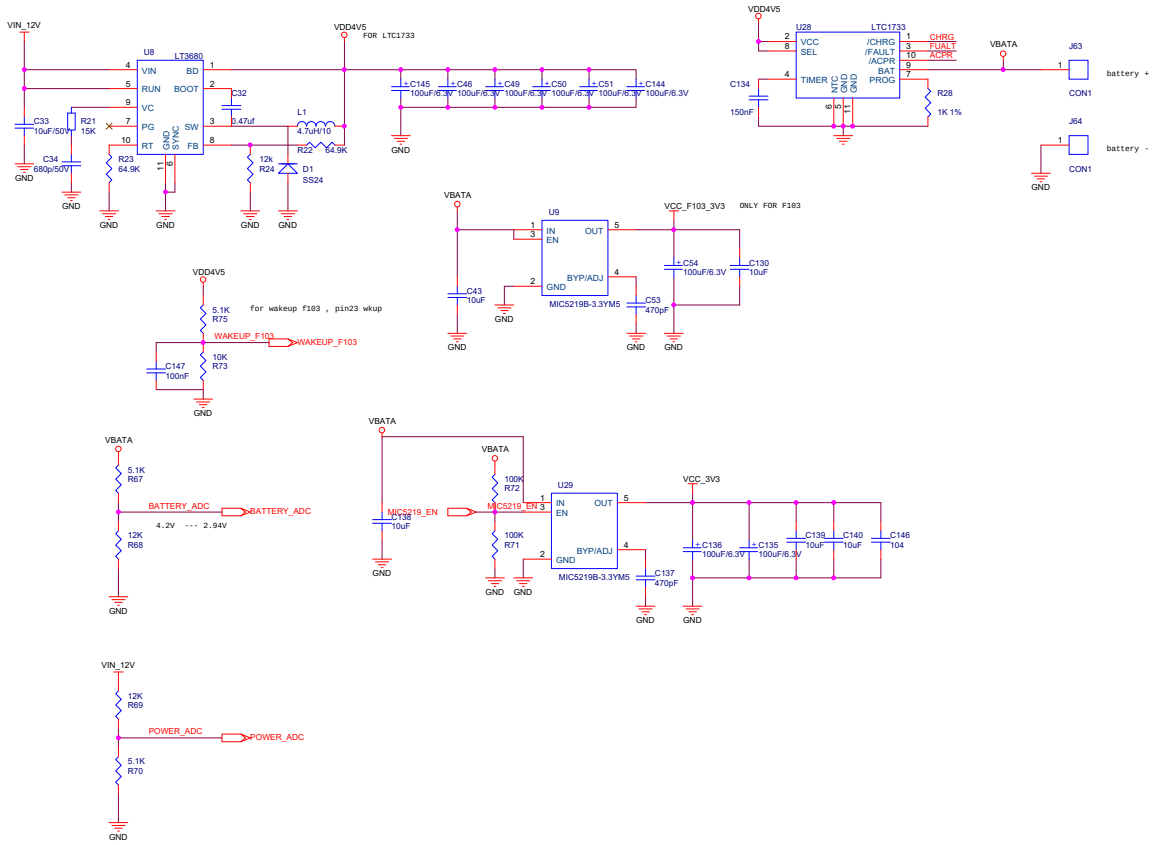

Title	<Title>	
Size A3	Document Number <Doc>	Rev <RevCode>
Date: Monday, August 08, 2016	Sheet 3 of 3	