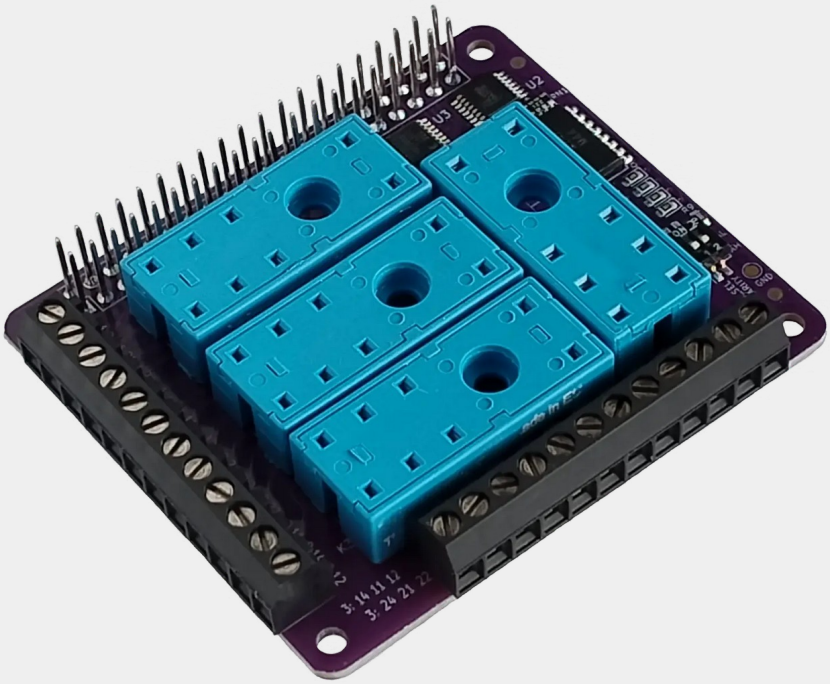

qReCon Flex v1.0

User Manual v1.0
28/11/2025

Please read the instruction manual for safe use and a user experience tailored to your needs.

The qReCon Flex has several connection, setup and feedback points for using it, highlighted in the figure below. For easy identification, the "( )" indicates the subsequent reference numbers. The colour and physical size of the connectors may differ from those shown in the figure below. The points of interest for the qReCon Flex user are shown in the figures below.

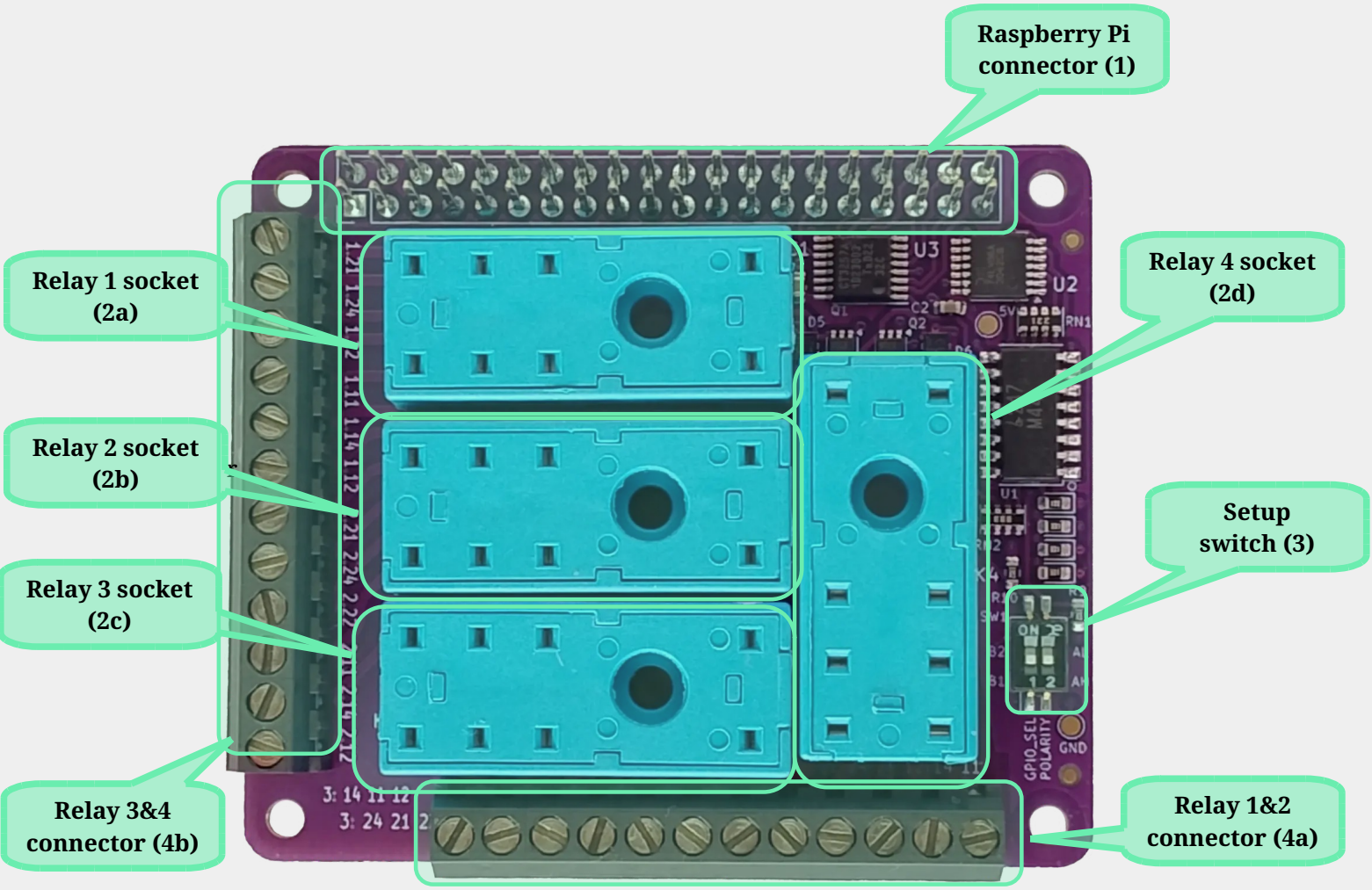

qReCon Flex v1.0 user points

1 Safety regulations

1.1 Personal safety

The qReCon Flex has no replaceable parts - only the manufacturer or an accredited service centre can carry out repairs and maintenance.

1.2 Product safety

The qReCon Flex product should be protected from too high or too low temperatures, direct sunlight. It should be kept in a dry place for 24 hours before installation.

Conductive liquids, plastic materials may cause short circuiting and permanent product damage, therefore avoid installation in such environments.

1.3 Precautions

The system operates from 5V, which is low voltage, so it is protected from electric shock in a life-safety sense. In case of short circuits caused by foreign matter, the contacts may heat up and cause injury!

The relays are suitable for switching voltages up to 250 VAC. If the device is used to control a high voltage device, touching the relay outputs or the (4) terminals is life-threatening. This section is marked with a yellow outline in the diagram below.

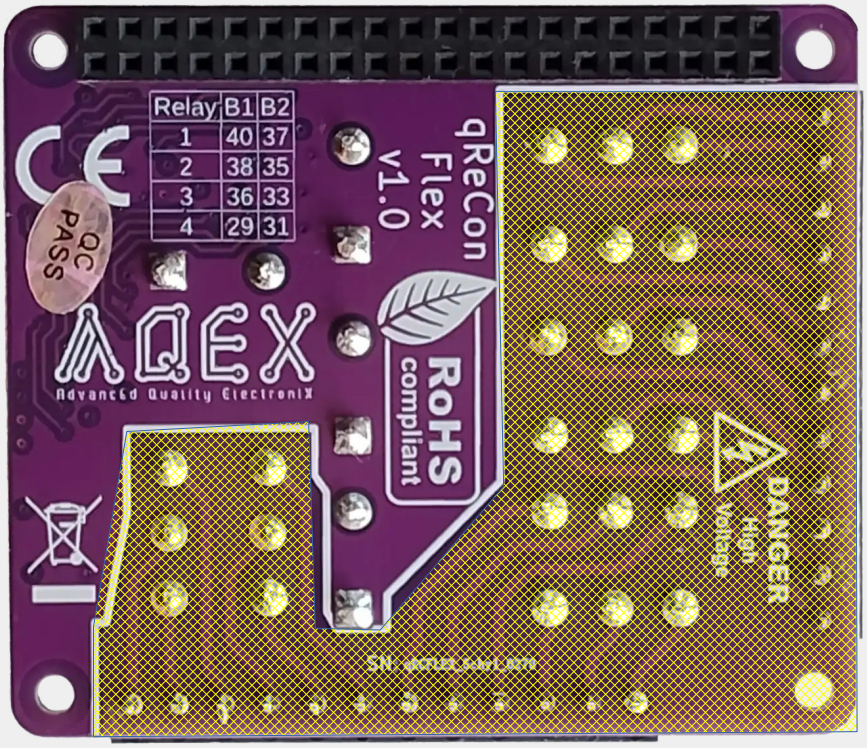

2 Introduction

Thank you for choosing AQEX qReCon Flex to control your electronic devices!

The qReCon Flex has been carefully and thoroughly designed to provide the most efficient way to ensure smooth operation in a wide range of conditions, to meet a wide range of user requirements.

By default, Raspberry Pi compatible microcomputers can only control devices with 3.3V DC, max. 16mA input current consumption via the GPIO port. With qReCon, they are also capable of switching higher voltages, current loads, and external electronic devices with alternating current (AC).

The special feature of the qReCon Flex product is that the type and function of the relays are not fixed, but can be selected and changed by the user, and can be easily replaced in case of failure.

3 Technical details

The high power is switched by 4 high quality relays, which operate 4 independent circuits in paralel. The module does not include relays as standard; these must be inserted into the built-in sockets.

⚠ Only use compatible relays; a list of these is provided in section 5.

On the qReCon Flex product, all 6 pins of the relays are connected to connectors (4).

It is possible to use relays of different types or manufacturers, even simultaneously, if they are compatible with the socket.

The functions of the individual pins of connector (4) are not predefined; they always depend on the type of relay used. See the relay product description for the pin assignment.

The low voltage logic controls the relays according to the settings of switch (2). Opto-isolators between the logic and the relays isolate the 2 systems from each other and the relay input is completely isolated from the output circuit (double isolation).

The maximum voltage and current that can be switched by the relays depends on the type of relay used; see the product description for the exact values.

The qReCon Flex uses 4 GPIO pins on the 2x20 pin connector for control. For flexibility, 2 groups of 4 pins can be selected. Details in section 4.3.1.1.1.

It is also possible to set the “Active level”. Details in section 4.3.1.1.2 pontban.

4 Commissioning

Before using the qReCon Flex product, please connect the relays to the appropriate sockets (2). The product can then be put into operation immediately. For computers using a Raspberry PI compatible 40 pin header, the connection is plug-and-play based, while in other cases the two pin +/- connection and the chosen 4 pins can be used.

4.1 Power supply

The qReCon Flex is powered by the corresponding 5V legs of the 40 pin connector (1).

4.2 Connections

The controlling device can be connected to the qReCon Flex product in different ways.

4.2.1 Single board computers (SBC)

If the SBC is equipped with a Raspberry PI compatible 40 pin header, the qReCon Flex product is suitable for HAT connection. Simply plug the qReCon Flex's connector (1) onto the computer's pin header as shown in the picture below.

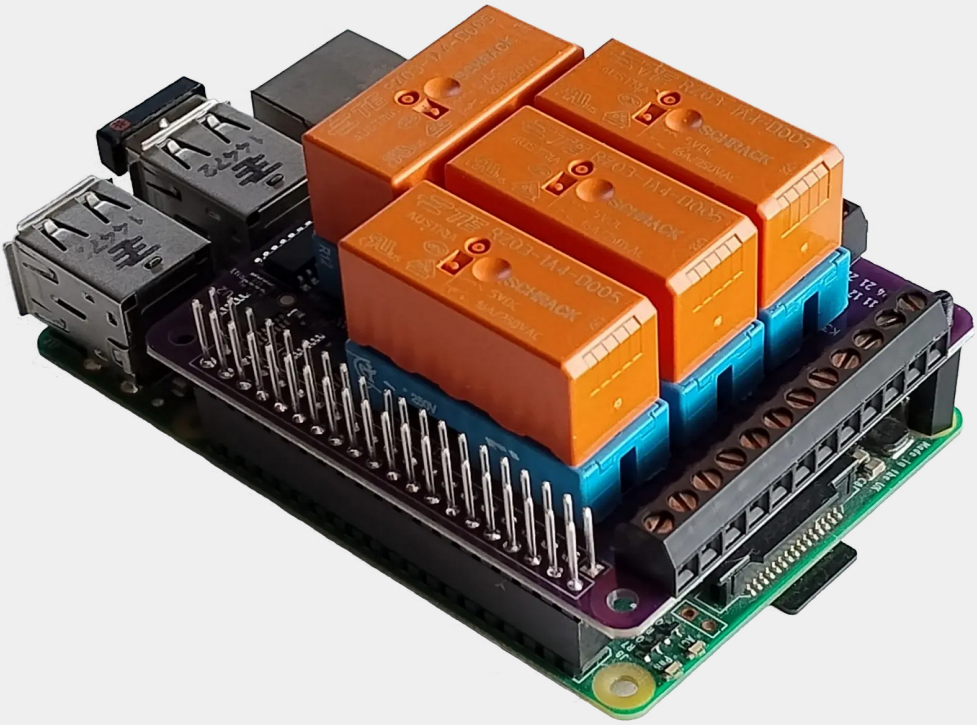

4.2.2 Other devices

Any device, that can supply 5V DC, can be connected to the qReCon Flex product using the appropriate contacts on the 40-pin header (1).

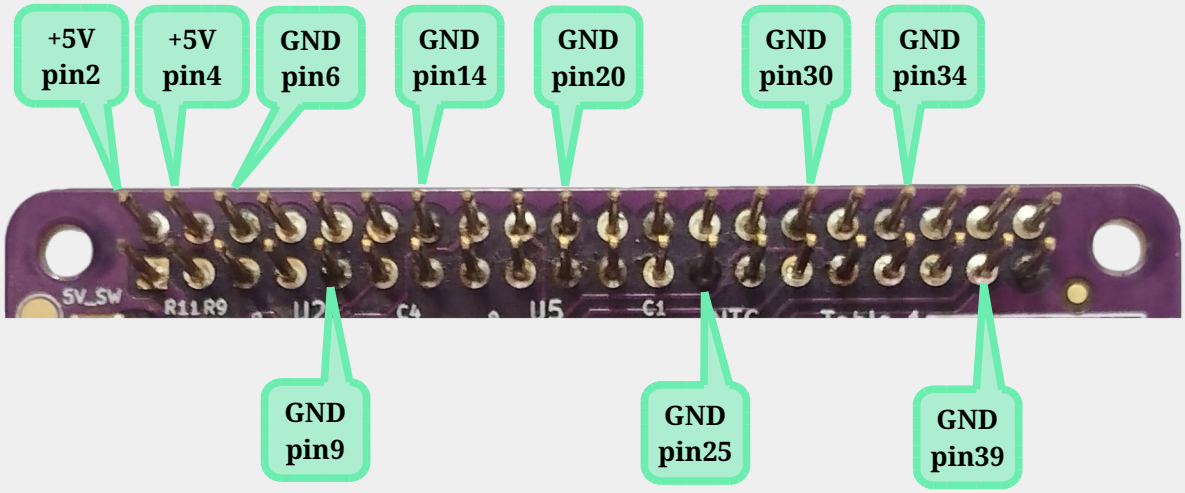

4.2.3 GPIO pins

The relays can be controlled via the corresponding pins of the connector (1).

All pins of connector (1) can be accessed on the top side of qReCon Flex. All but the 4 GPIO pins selected on switch (3) are free to be used for any other purpose.

If the product is not controlled by a Raspberry compatible device, the relays can be controlled by 3.3V or 5V logic connected to the selected GPIO pins.

4.3 Setup

4.3.1 Hardware setup

The properly connected system will work under normal conditions with default settings. The Setup switch (3) allows for alternative modes of operation.

4.3.1.1 2 circuit „Setup switch” (2) – DIP switch

The qReCon Flex product has a 2-circuit two-position switch, which controls 2 system parameters:

- Control pin assignment (GPIO_SEL). Details in section 3.3.1.1.1.

-„Active level” setup (POLARITY). Details in section 3.3.1.1.2.

4.3.1.2 Control pins selection

The qReCon Flex product uses 4 GPIO pins to control the Raspberry Pi in a flexible and configurable way.

The 4 selected pins are determined by the position of the GPIO_SEL switch as shown in the table below:

DIP switch position	GPIO BCM / BOARD láb (40 pin connector)			
GPIO_SEL	Relay 1	Relay 2	Relay 3	Relay 4
OFF (B1)	GPIO21 / Pin 40	GPIO20 / Pin 38	GPIO16 / Pin 36	GPIO5 / Pin 29
ON (B2)	GPIO17 / Pin 37	GPIO19 / Pin 35	GPIO13 / Pin 33	GPIO6 / Pin 31

2. táblázat

By default, when controlled by Raspberry Pi, relays 1-2-3 are inactive at boot phase, but relay 4 (GPIO5 and GPIO6) are active due to weak pull-up resistance.

This operation can be modified by configuring the Raspberry OS boot process. The boot configuration file (/boot/firmware/config.txt) can be set using the following GPIO configuration commands: gpio=X=mode,state

For example, to change GPIO 5 to low (inactive): gpio=5=op,dl

4.3.1.2.1 ”Active level” setup

When the dip switch is in the “OFF” position, the relays are set to “Active high” and when it is in the ‘ON’ position, the relays are set to “Active low”. See the table below for the relay contacts associated with each setting.

DIP switch position	GPIO level	
POLARITY	0 (False)	1 (True)
OFF (AH)	COM-NC	COM-NO
ON-(AL)	COM-NO	COM-NC

3. táblázat

4.3.2 Software setup

The operating system or program running on the control device can be prepared to switch the relay outputs of the qReCon Flex product via the GPIO connectors corresponding to the configured footprint.

For more information and C and shell based utilities can be found on the https://github.com/aqexhu/qReCon page.

5 *Compatible relay models*

The following non-exhaustive list contains relays that are compatible with the qReCon Flex product:

- Finder 40.51.9.005.xxxx
- Finder 40.52.9.005.xxxx
- Finder 40.61.9.005.xxxx

- Omron G2RL-1A-E(-HA, -PW1) család 5V DC coil
- Omron G2RL-1A4-E, G2RL-1A-E-CV(-HA) család 5V DC coil
- Omron G2RL-1A-E-ASI család 5V DC coil
- Omron G2RL-1-E(-ASI, -HA, -PW1) család 5V DC coil
- Omron G2RL-14-E család 5V DC coil
- Omron G2RL-2A(-HA, -PW1), G2RL-2A4 család 5V DC coil
- Omron G2RL-2(-HA, -PW1), G2RL-24, család 5V DC coil
- Omron G2RL-2-ASI család 5V DC coil
- Omron G5RL-1A-E-LN család 5V DC coil
- Omron G5RL-1A-E-HR család 5V DC coil
- Omron G5RL-1A-E-TV8 család 5V DC coil
- Omron G5RL-1-E család 5V DC coil
- Omron G5RL-1-E-HR család 5V DC coil

- TE Connectivity / Schrack RT2xx005x
- TE Connectivity / Schrack RT3xx005x
- TE Connectivity / Schrack RT4xx005x
- TE Connectivity / Schrack RTCxx005x
- TE Connectivity / Schrack RTDxx005x
- TE Connectivity / Schrack RTExx005x
- TE Connectivity / Schrack RZx2-xxx-D005x
- TE Connectivity / Schrack RZx3-xxx-D005x
- TE Connectivity / Schrack RZxH-xxx-D005x

⚠ The product can only drive relays with a nominal coil voltage of 5V DC.

6 Troubleshooting

Symptom	Cause of error	Solution