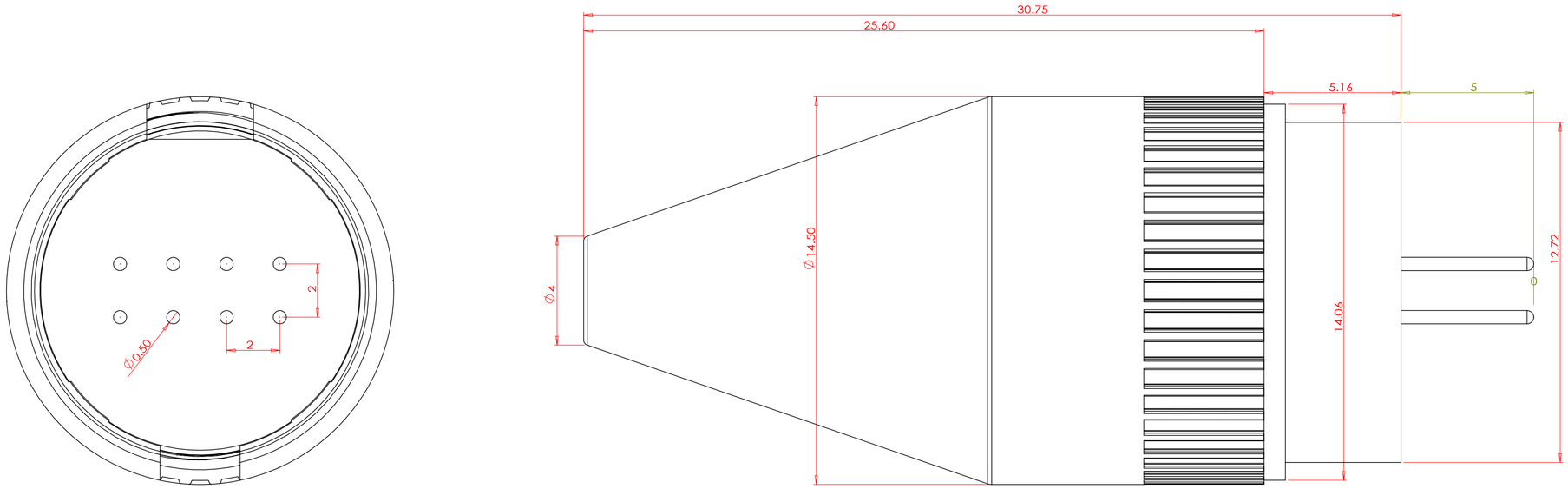

2013/8/20

A
1

1