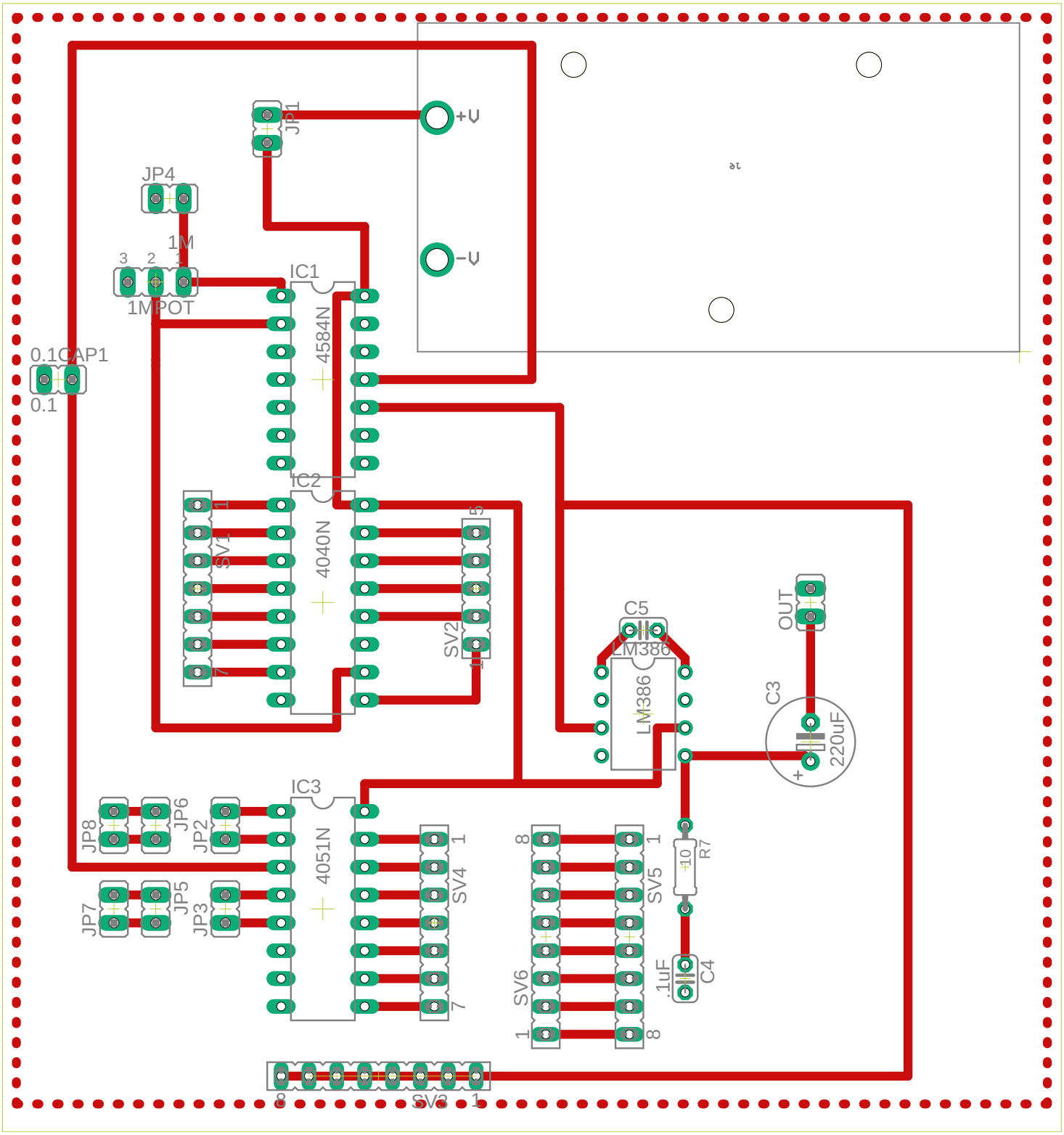
JP1
+V
-V
JP4
1M
3 2 1
1MPOT
IC1
4584N
0.1CAP1
0.1
IC2
4040N
SV1
SV2
C5
LM386
LM386
OUT
C3
220uF
IC3
4051N
JP8
JP6
JP2
JP7
JP5
JP3
SV4
SV5
SV6
R7
10
.1uF
C4
SV3