ME 119 Engineering Drawing

INTRODUCTION

Prof. Sushil Mishra, Department of Mechanical Engineering, IIT Bombay

Lectures : Fridays 9:30 AM - 11:00 AM

Labs : Tuesday 2:00 PM - 05:00 PM

Task for Labs shared through MS Teams after lectures

Lectures and Labs through MS Teams

Announcements and Lab submissions through MS Teams

For Labs

Use any drawing sheet as per your convenience, A4 or A3

Use separate drawing sheet for every question for A4

Scan or take photos **of drawings merge in single file**

Rename files : RollNumber_X

X is Lab number

Example : 210100001_1

Upload files in Dropbox anytime before end of Lab

For correcting a file uploaded by mistake, upload another file named RollNumber_Xa, RollNumber_Xb etc.

PENCIL

4H 3H 2H 1H HB B1 B2 B3 B4

Object lines :

Dark lines (Visible and hidden)

Construction lines :

Lighter lines, Centre lines, Dimension lines

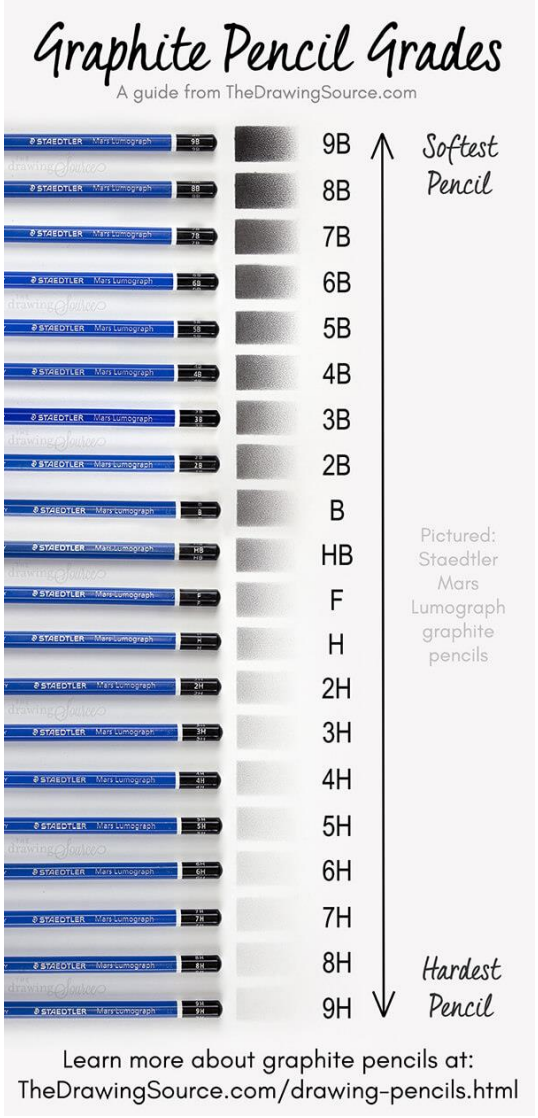

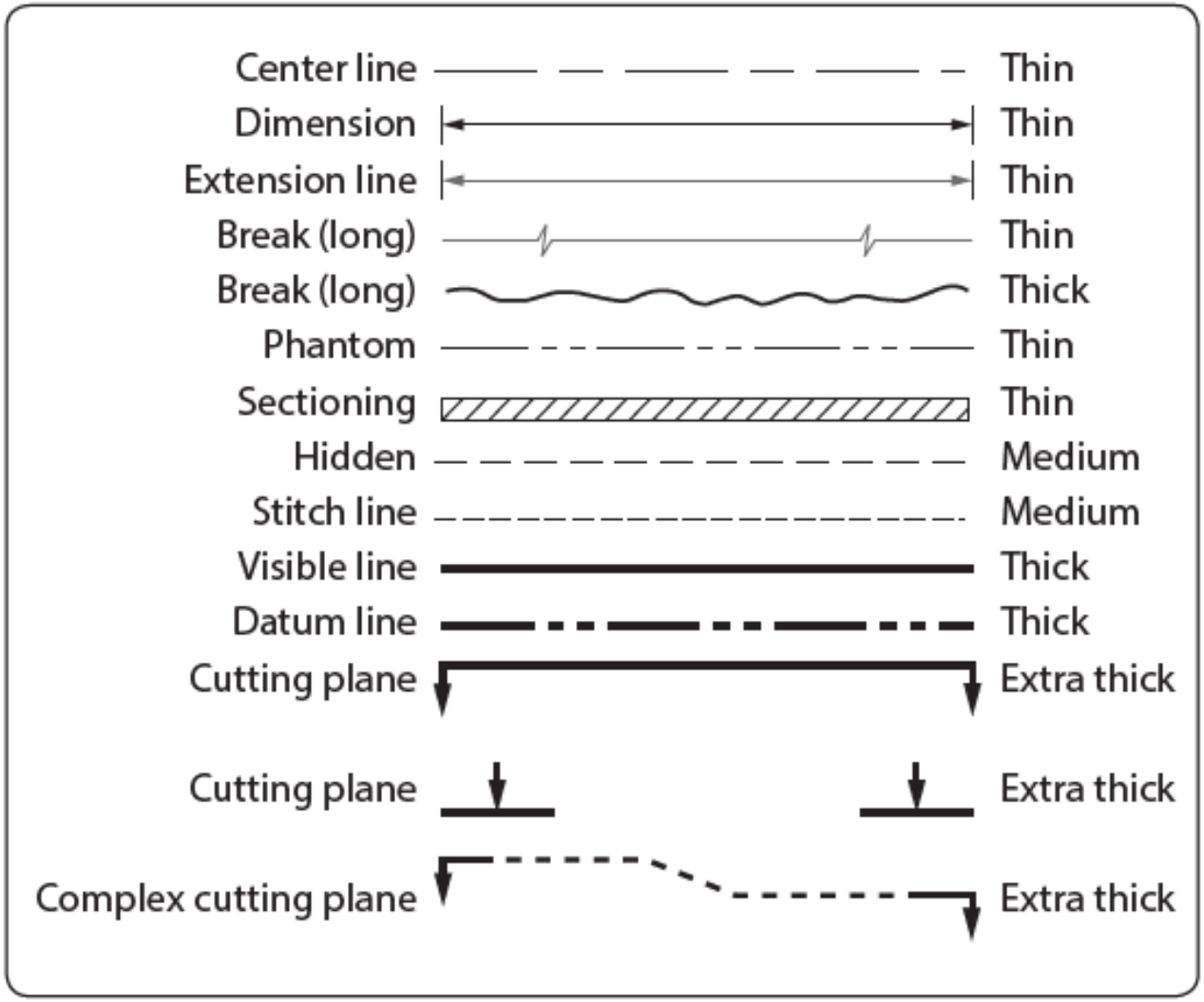

Datum line : a reference point, surface, or axis on an object against which measurements are made.
Phantom line: a imaginary position of the object/line

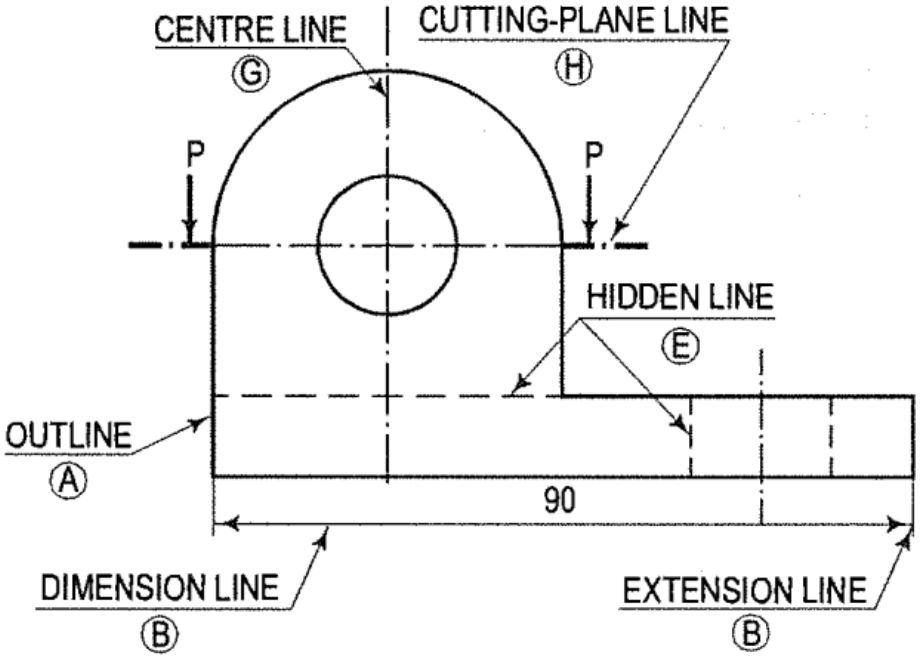
CENTRE LINE
G
CUTTING-PLANE LINE
H
P
P
HIDDEN LINE
E
OUTLINE
A
90
DIMENSION LINE
B
EXTENSION LINE
B

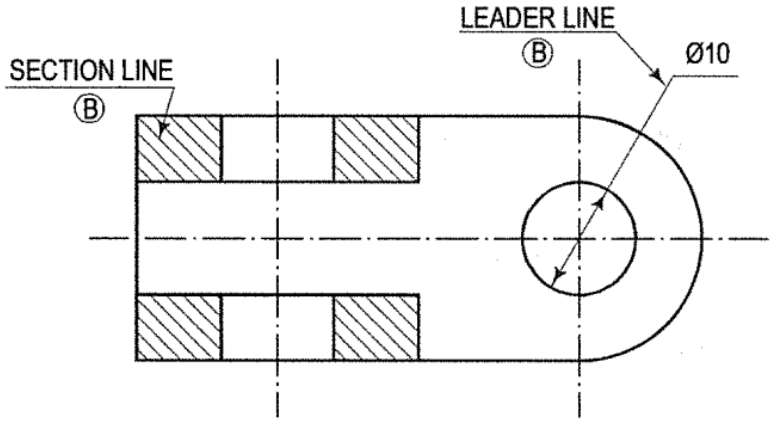
LEADER LINE
B
Ø10
SECTION LINE
B

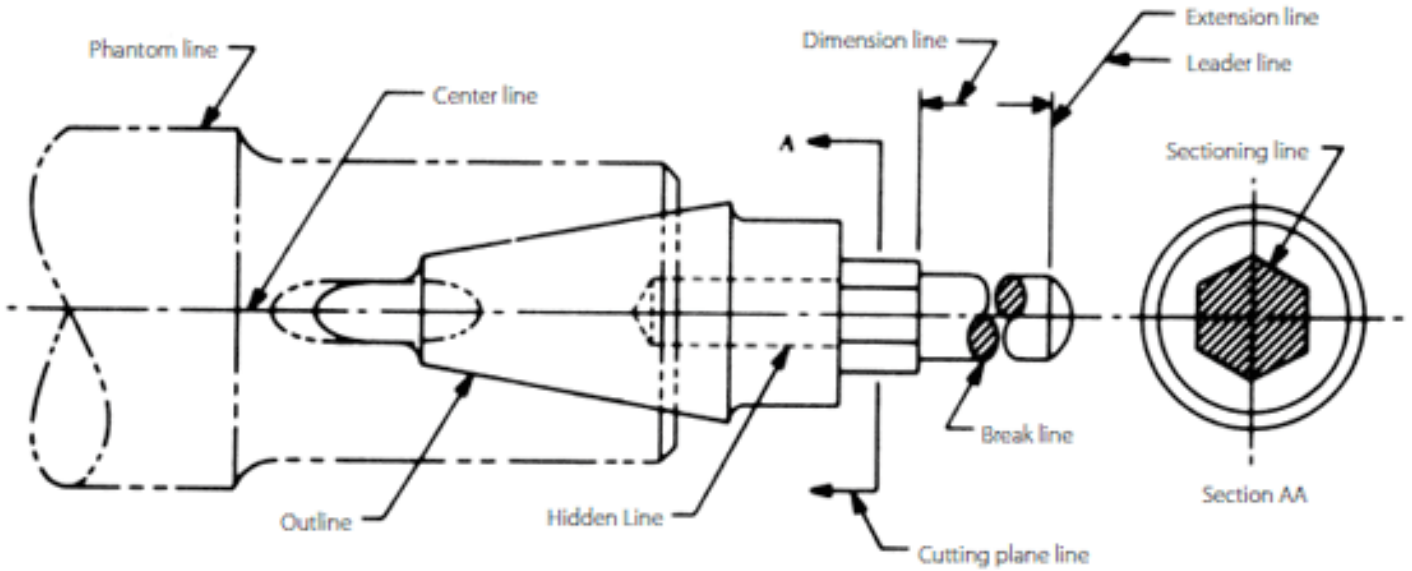
Phantom line
Center line
Dimension line
Extension line
Leader line
Sectioning line
A
Break line
Section AA
Outline
Hidden Line
Cutting plane line

Basis of evaluation of Lab submissions :

Correctness + Neatness + Viva

Basis of evaluation of tests :

Viva/quiz → Correctness→ neatness.

Lecture No.	Topic	Lab No.	Topic	Weightage (%)
1	Orthographic projections	1	Orthographic projections	6.25
2	Projection of Points/ Lines			
	Additional lecture on Auxiliary Planes	2	Projection of Lines	6.25
3	Projection of Planes	3	Projection of Planes	6.25
4	Projection of Solids	4	Projection of Solids	6.25
	TEST 1		Labs 1 to 4	25
5	Sections of Solids	5	Sections of Solids	6.25
6	Development of Surfaces	6	Development of Surfaces	6.25
7	Intersection of Solids	7	Intersection of Solids	6.25
8	Isometric projections	8	Isometric projections	6.25
	TEST 2		Labs 5 to 8	25

Text Book : N. D. Bhatt and V. M. Panchal, Engineering Drawing, Charotar Publishers

Reference Books :

Warren J. Luzadder and Jon M. Duff, Fundamentals of Engineering Drawing, Prentice-Hall of India

Thomas E. French, Charles J. Vierck and Robert Foster, Engineering Drawing and Graphic Technology, McGraw Hill

Dhananjay A. Jolhe, Engineering Drawing,
Tata McGraw Hill Publishing Co. Ltd.

M. B. Shah and B. C. Rana, Engineering Drawing, Dorling Kindersley (India) Pvt. Ltd., Pearson Education

Narayana. K. L., and Kannaiah, P. E., Engineering Graphics, Scitech Publications

ORTHOGRAPHIC PROJECTIONS

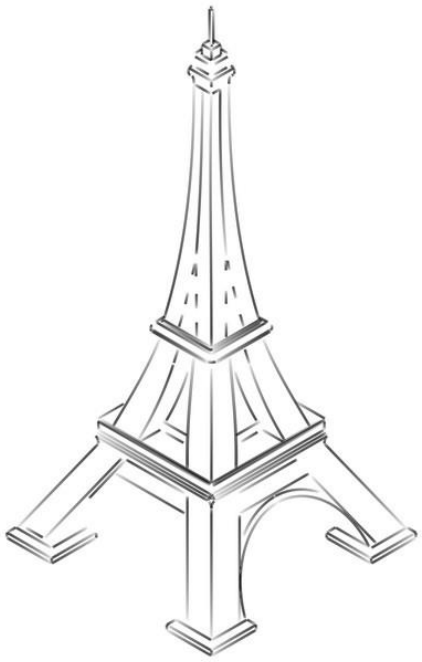

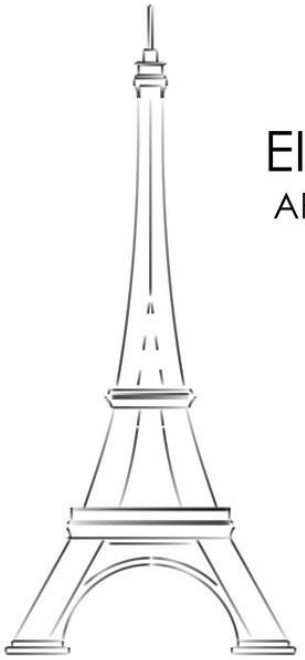

EIFFEL TOWER

ARTISTIC SILHOUETTE

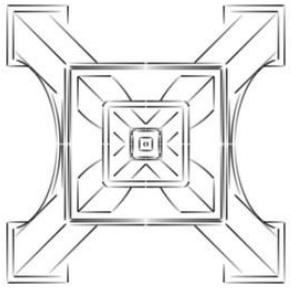

VectorStock®

VectorStock.com/26638246

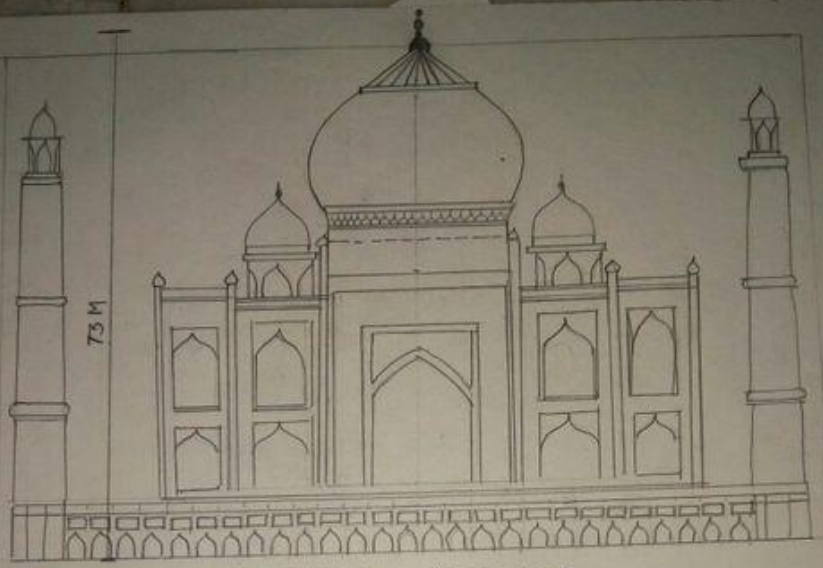

TAJ MAHAL (ELEVATION)

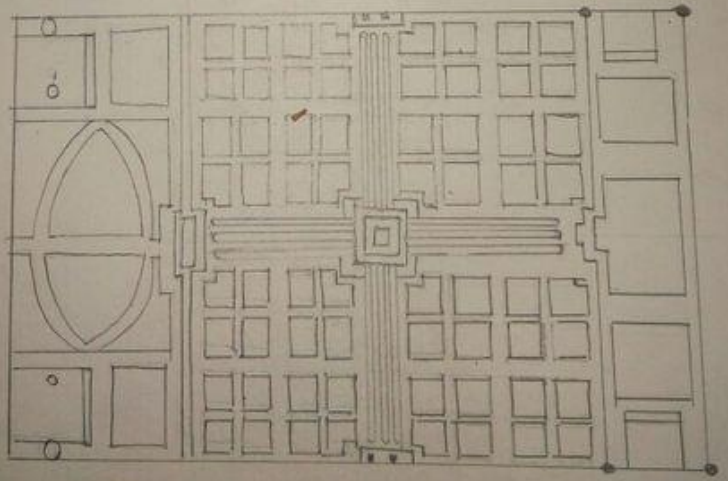

TAJ MAHAL PLAN

Perspective Projection

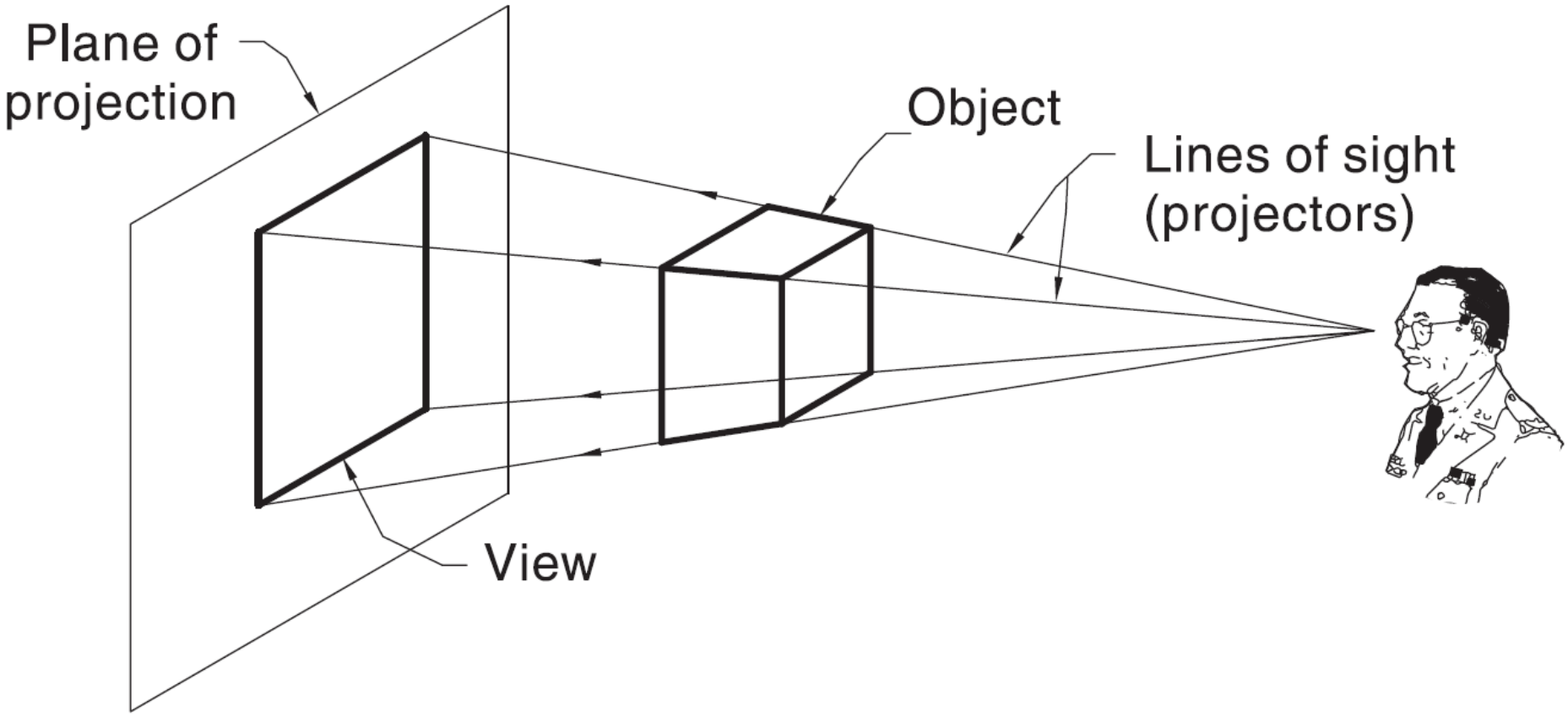

Oblique Projection

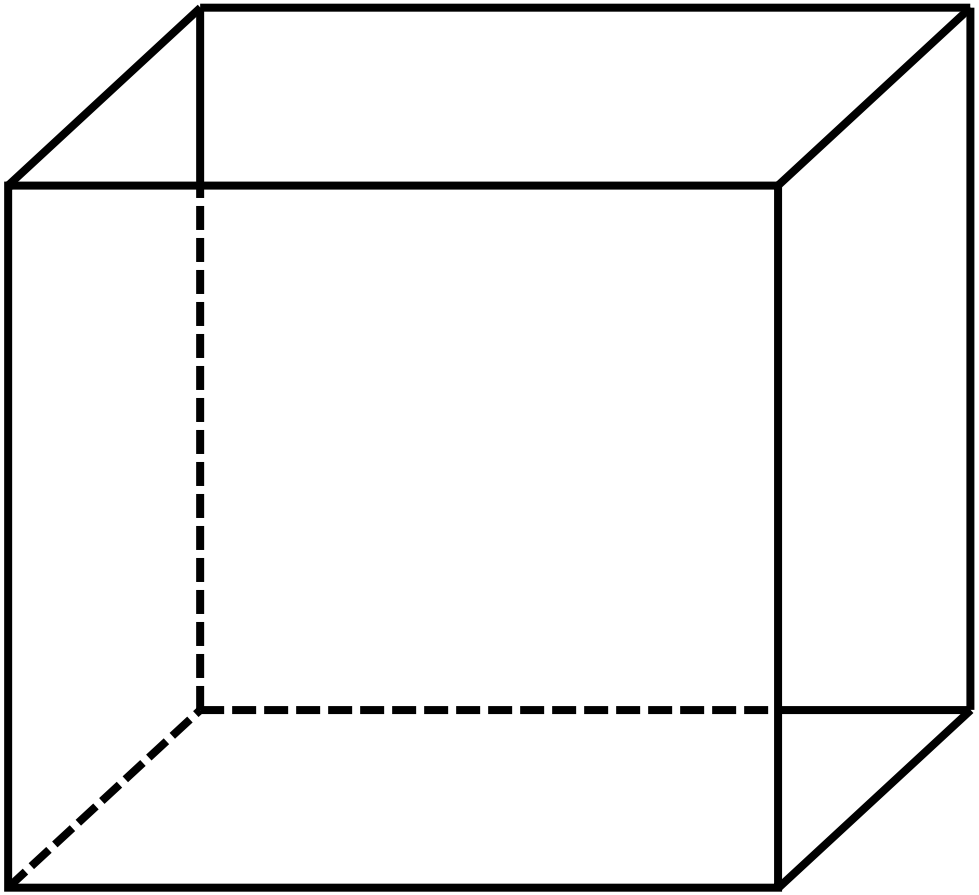

Methods of Projection

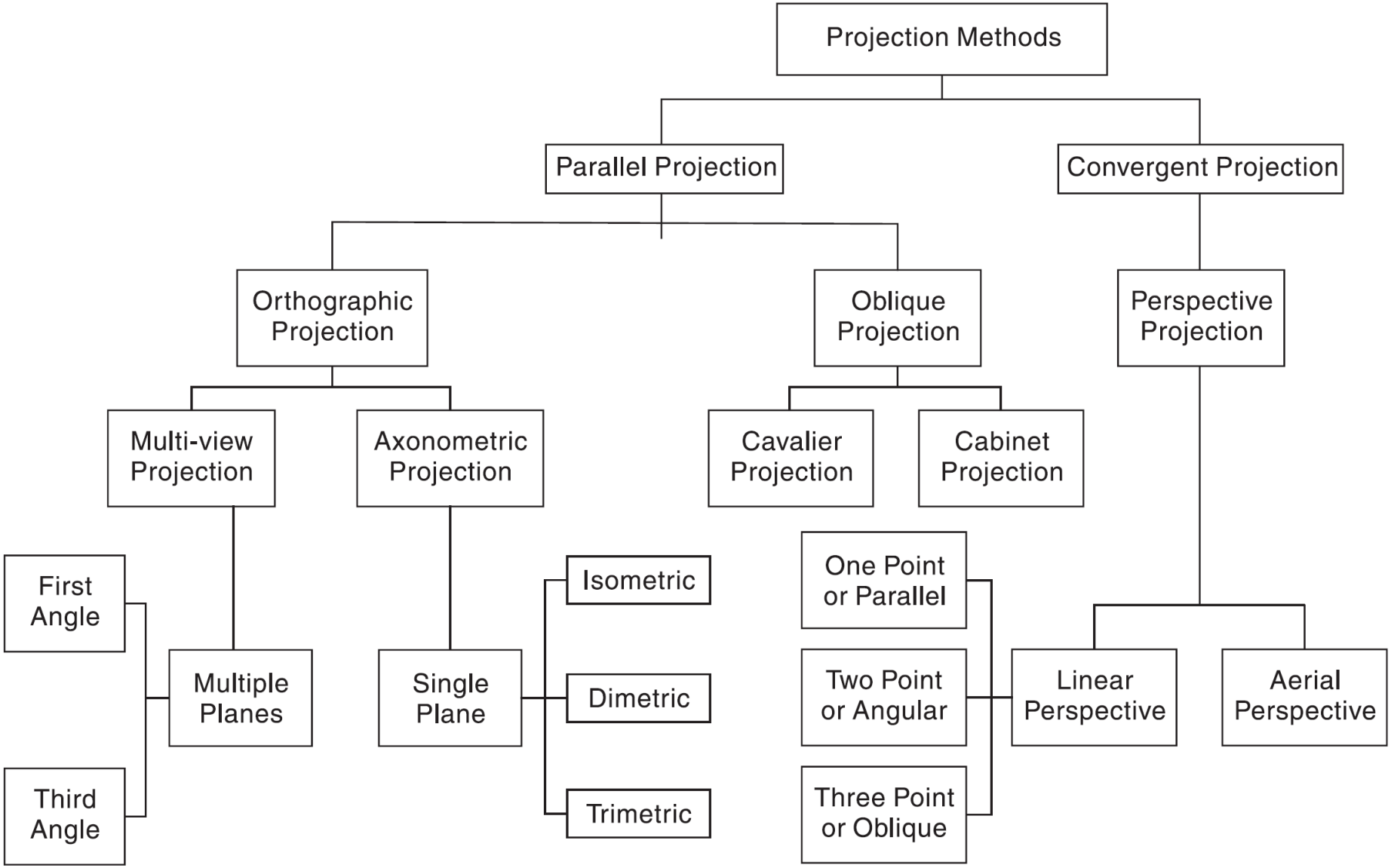

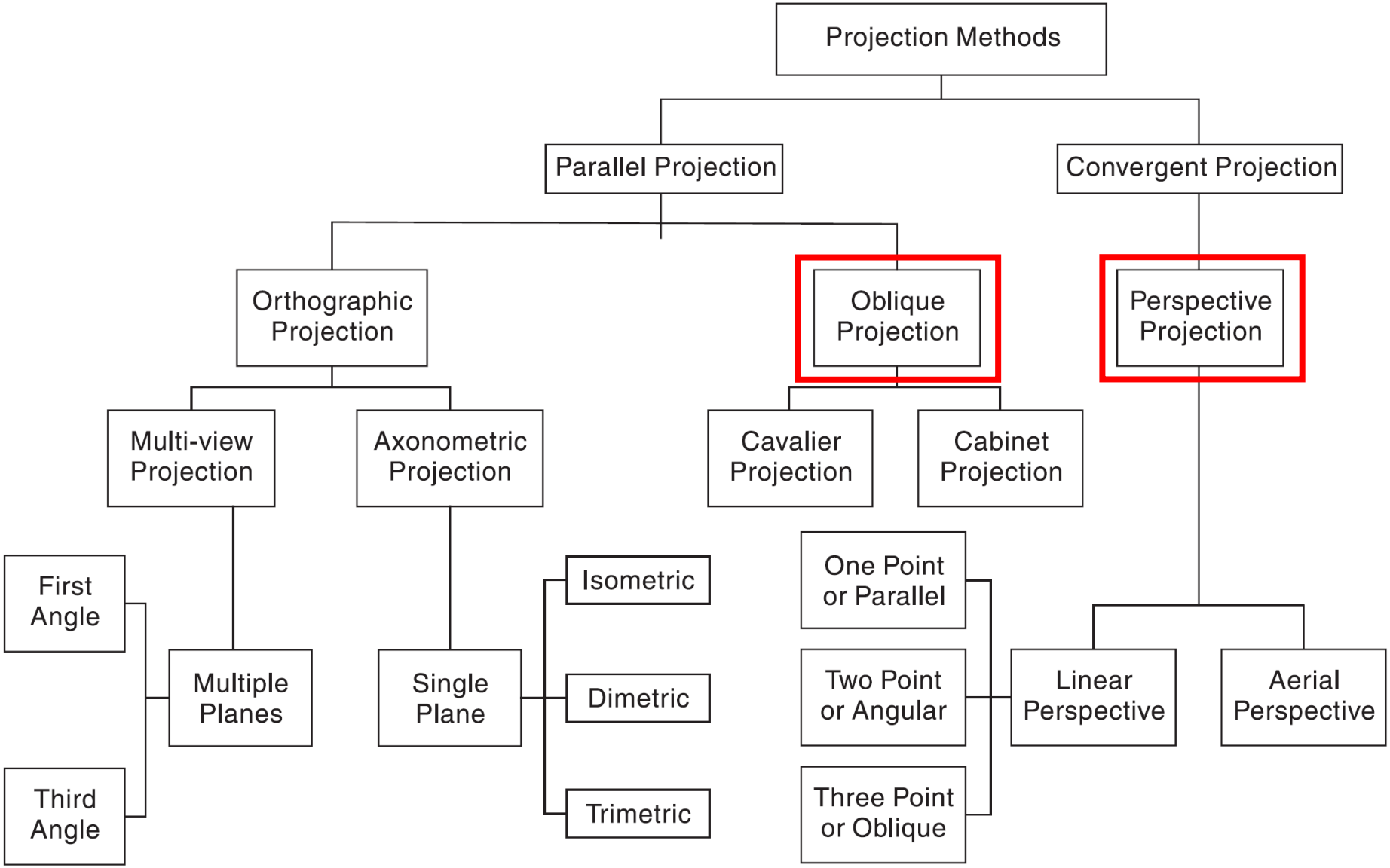
Projection Methods
Parallel Projection
Convergent Projection
Orthographic Projection
Oblique Projection
Perspective Projection
Multi-view Projection
Axonometric Projection
Cavalier Projection
Cabinet Projection
First Angle
Third Angle
Multiple Planes
Single Plane
Isometric
Dimetric
Trimetric
One Point or Parallel
Two Point or Angular
Three Point or Oblique
Linear Perspective
Aerial Perspective

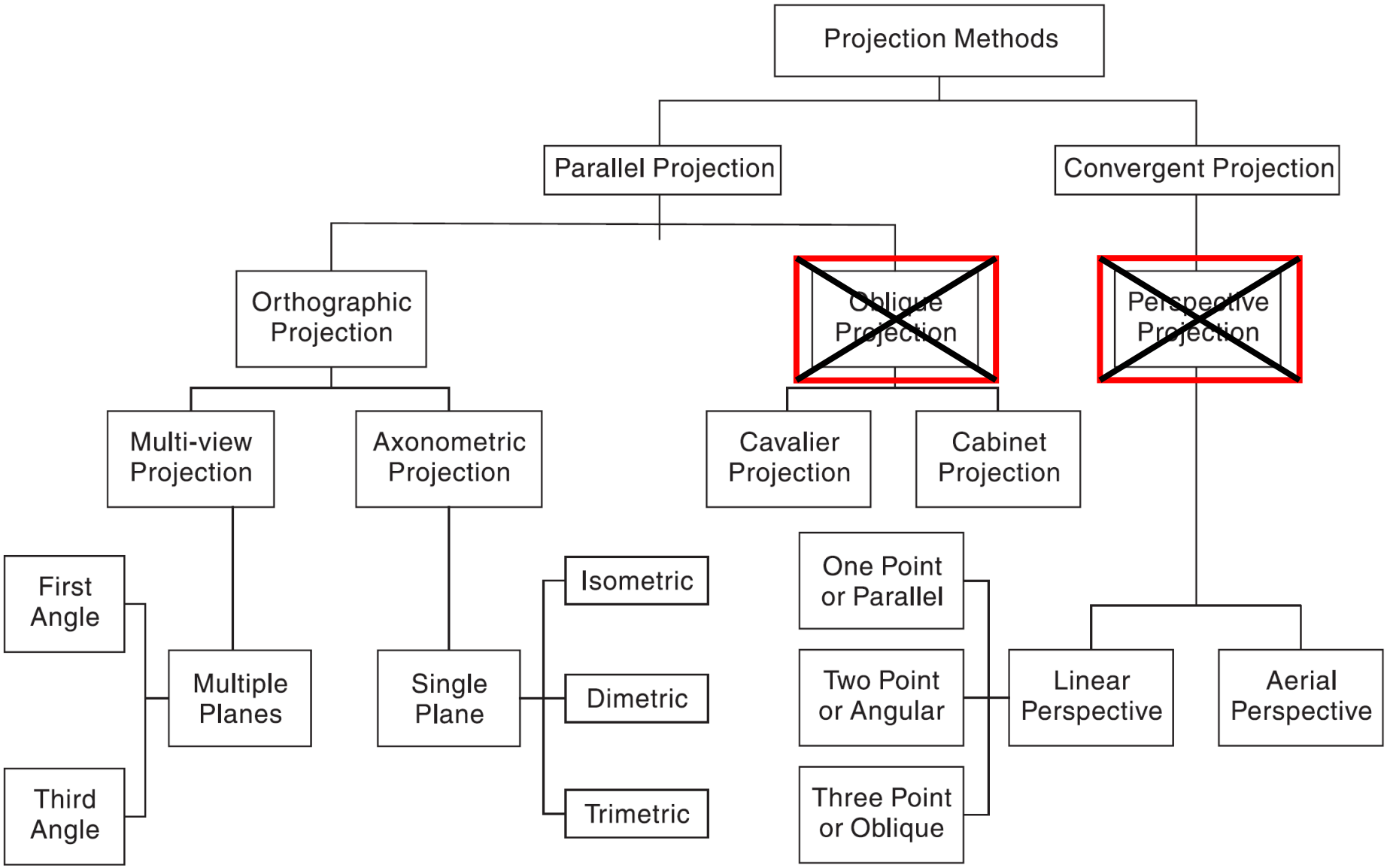
Projection Methods
Parallel Projection
Convergent Projection
Orthographic Projection
Oblique Projection
Perspective Projection
Multi-view Projection
Axonometric Projection
Cavalier Projection
Cabinet Projection
First Angle
Third Angle
Multiple Planes
Single Plane
Isometric
Dimetric
Trimetric
One Point or Parallel
Two Point or Angular
Three Point or Oblique
Linear Perspective
Aerial Perspective

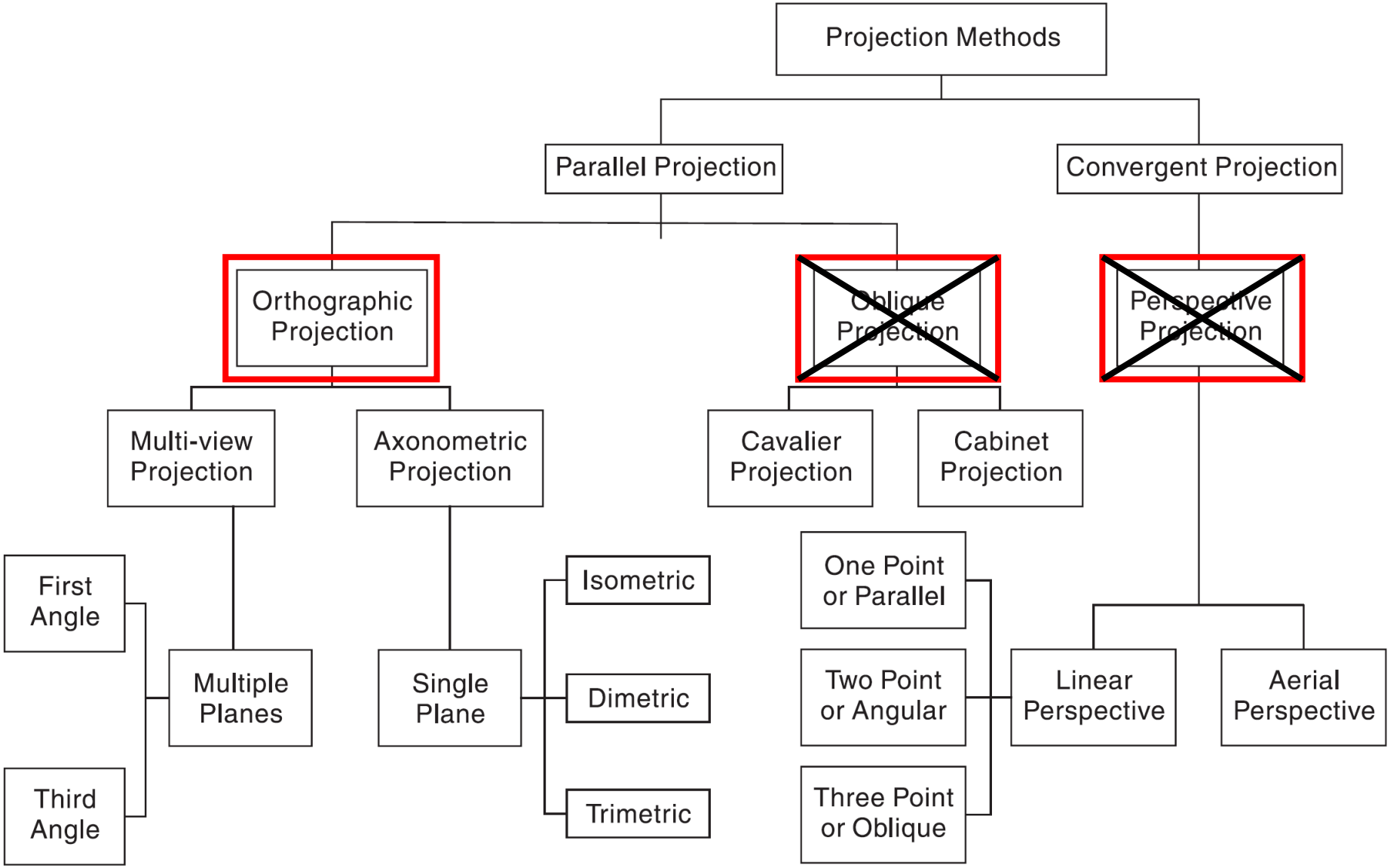
Projection Methods
Parallel Projection
Convergent Projection
Orthographic Projection
Oblique Projection
Perspective Projection
Multi-view Projection
Axonometric Projection
Cavalier Projection
Cabinet Projection
First Angle
Third Angle
Multiple Planes
Single Plane
Isometric
Dimetric
Trimetric
One Point or Parallel
Two Point or Angular
Three Point or Oblique
Linear Perspective
Aerial Perspective

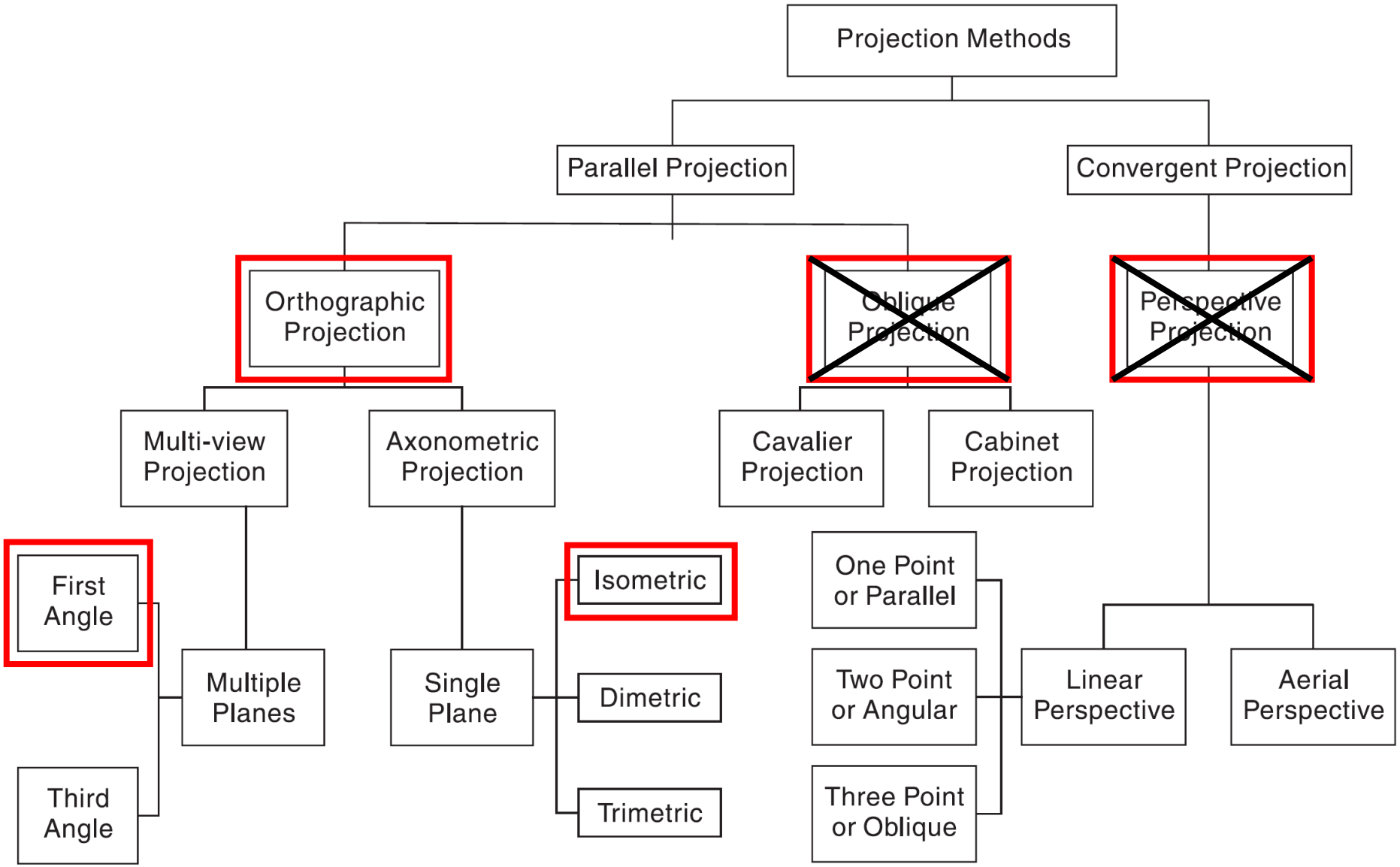
Projection Methods
Parallel Projection
Convergent Projection
Orthographic Projection
Oblique Projection
Perspective Projection
Multi-view Projection
Axonometric Projection
Cavalier Projection
Cabinet Projection
First Angle
Third Angle
Multiple Planes
Single Plane
Isometric
Dimetric
Trimetric
One Point or Parallel
Two Point or Angular
Three Point or Oblique
Linear Perspective
Aerial Perspective

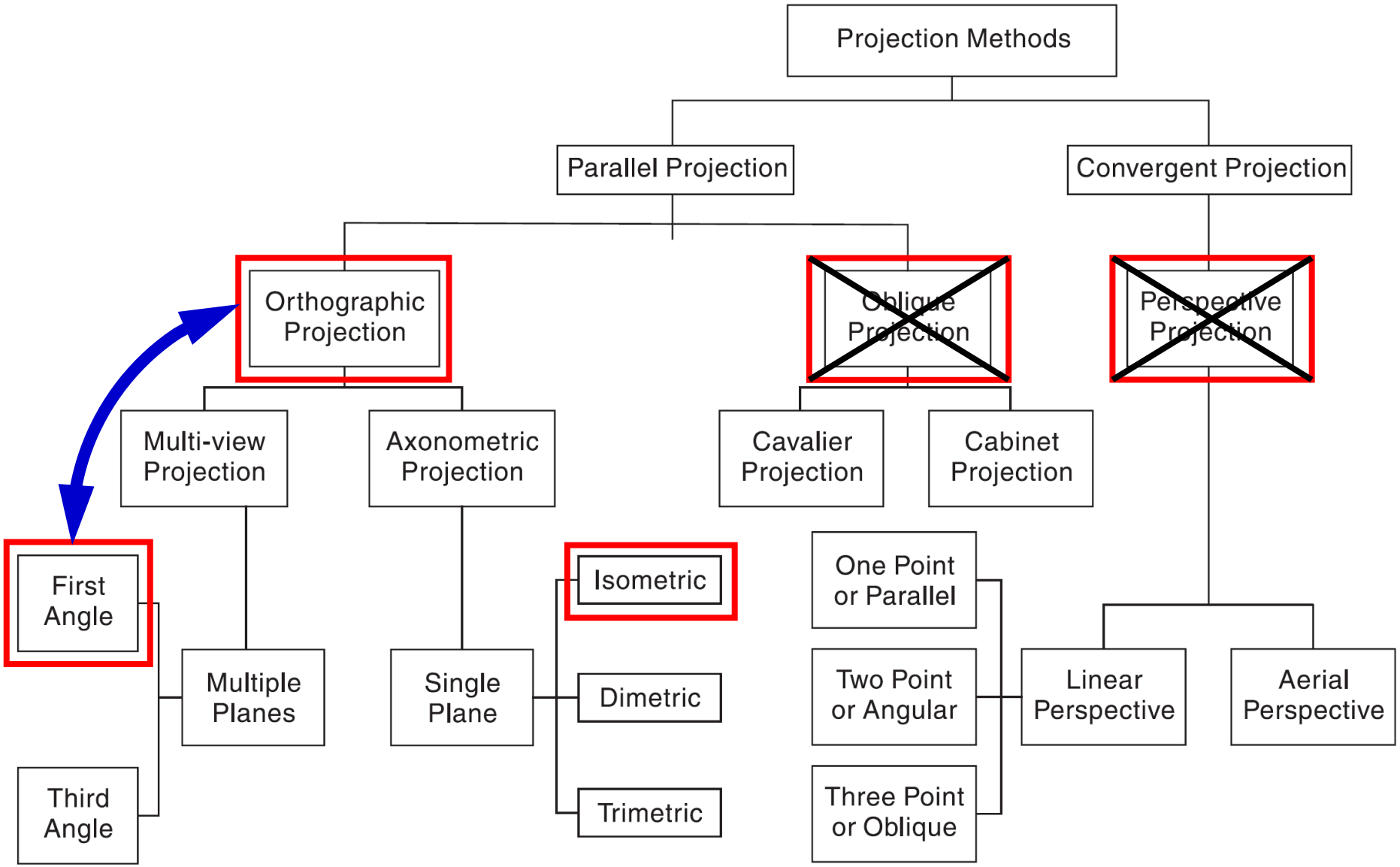
Projection Methods
Parallel Projection
Convergent Projection
Orthographic Projection
Oblique Projection
Perspective Projection
Multi-view Projection
Axonometric Projection
Cavalier Projection
Cabinet Projection
First Angle
Third Angle
Multiple Planes
Single Plane
Isometric
Dimetric
Trimetric
One Point or Parallel
Two Point or Angular
Three Point or Oblique
Linear Perspective
Aerial Perspective

Multiview Orthographic Projections

- **Orthographic Projection**: The projectors are perpendicular to the projection plane

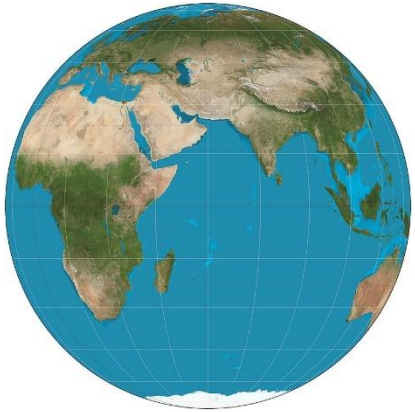

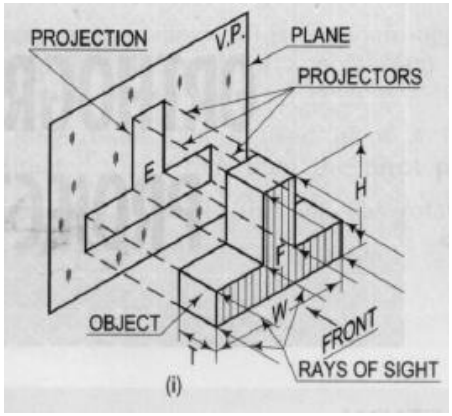

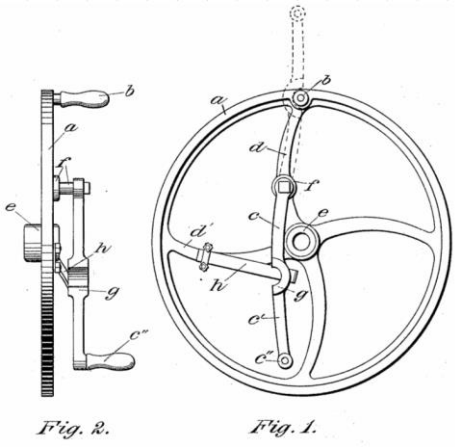

- **Multiview Projection**: More than one view of the object are shown

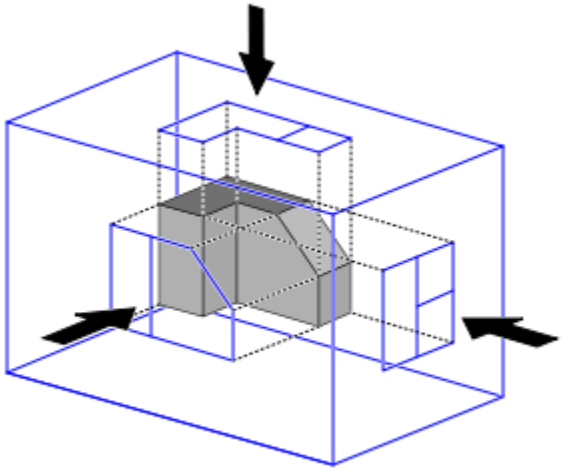

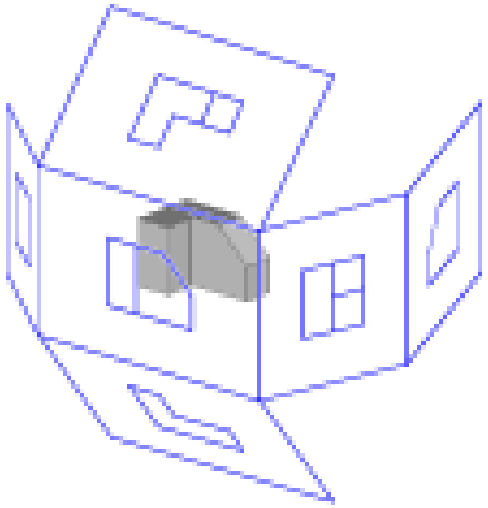

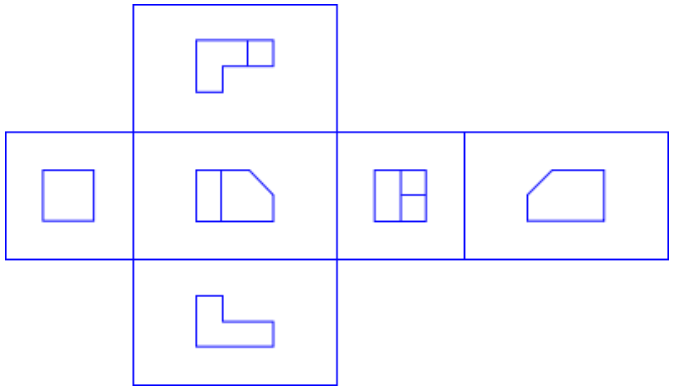

Orthographic Projection

Projectors are parallel to each other and perpendicular to the plane of projection

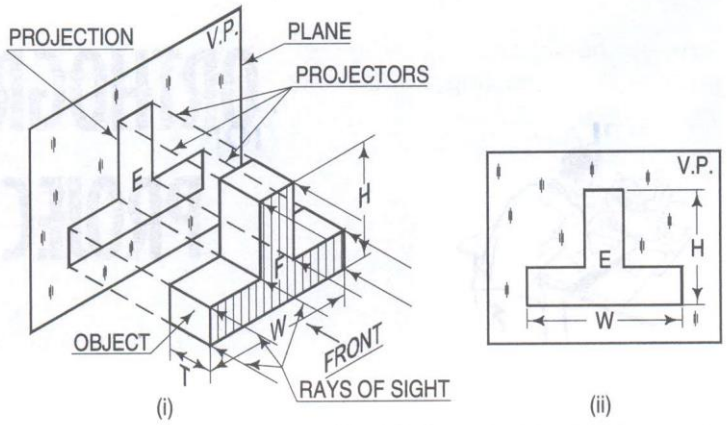

FIG. 8-1

Reference Line

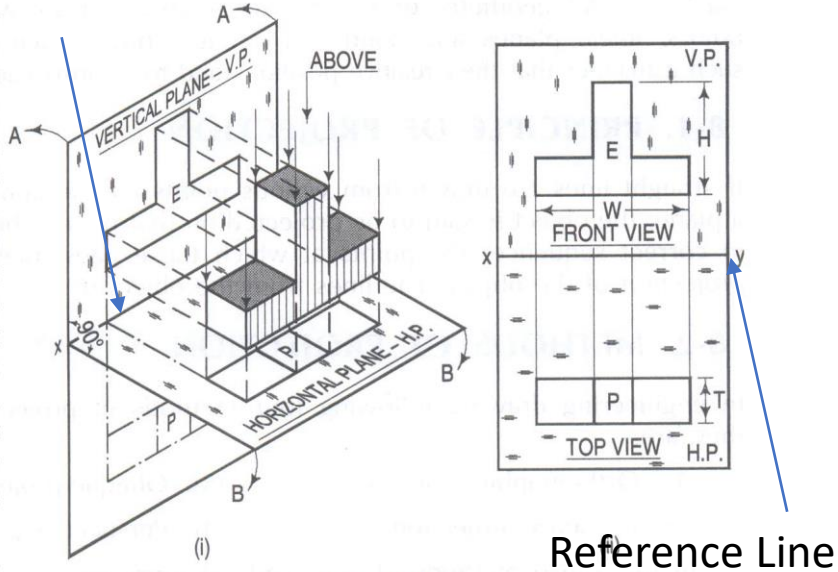

FIG. 8-2

Reference Line

Two major reference or principal planes of projection

V.P. – vertical (frontal) plane

H.P. – horizontal plane

Projections are drawn from relevant **points**

- Typically intersection of **edges** in 3D figure

Projection on V.P. – front view or elevation

Projection on H.P. – top view or plan

Intersection of the V.P. and the H.P. is called the reference line and is denoted by xy

Note: Generally we will also need a side view

Ref: Engineering Drawing by N. D. Bhatt et. al

Orthographic Projection: Additional Points

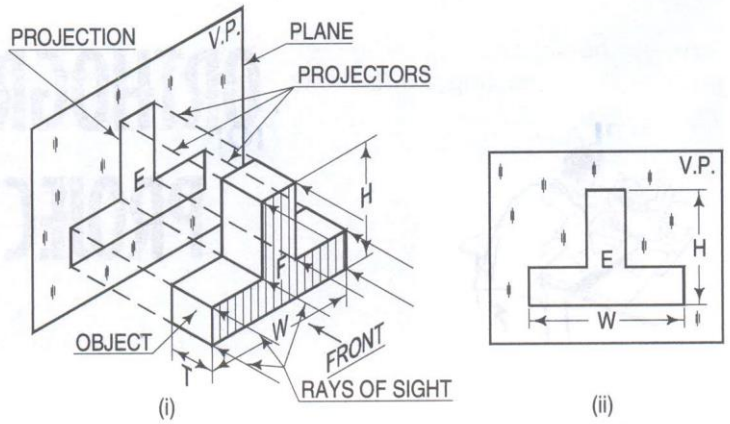

FIG. 8-1

Reference Line

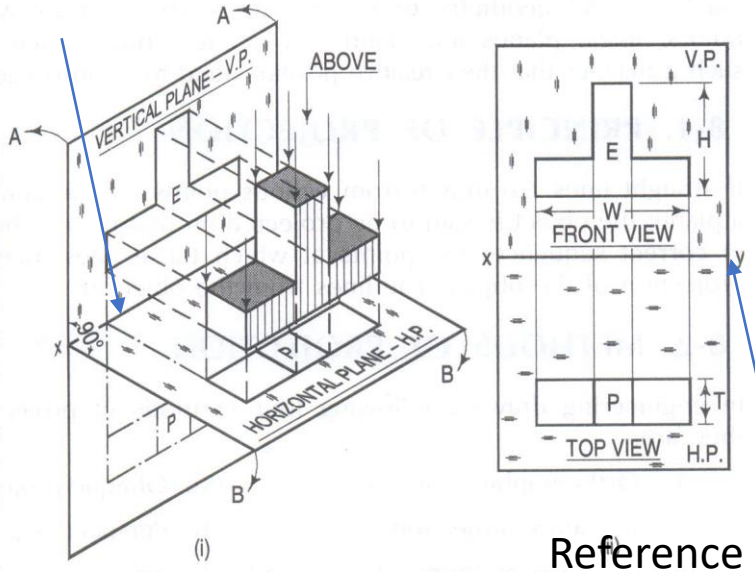

FIG. 8-2

Reference Line

- The HP and VP are **infinite in extent**
  - They extend to infinity towards both +ve and –ve directions of the respective axes
- Either AA or BB are opened out to get the multiview drawings on 2D plane
- Once one of the principal planes is opened out, the "location" of the 3D object is undefined (and irrelevant) on the 2D plane
- Main **direction of observation (arrow)** needs to be specified
  - This decides which view is the Front View

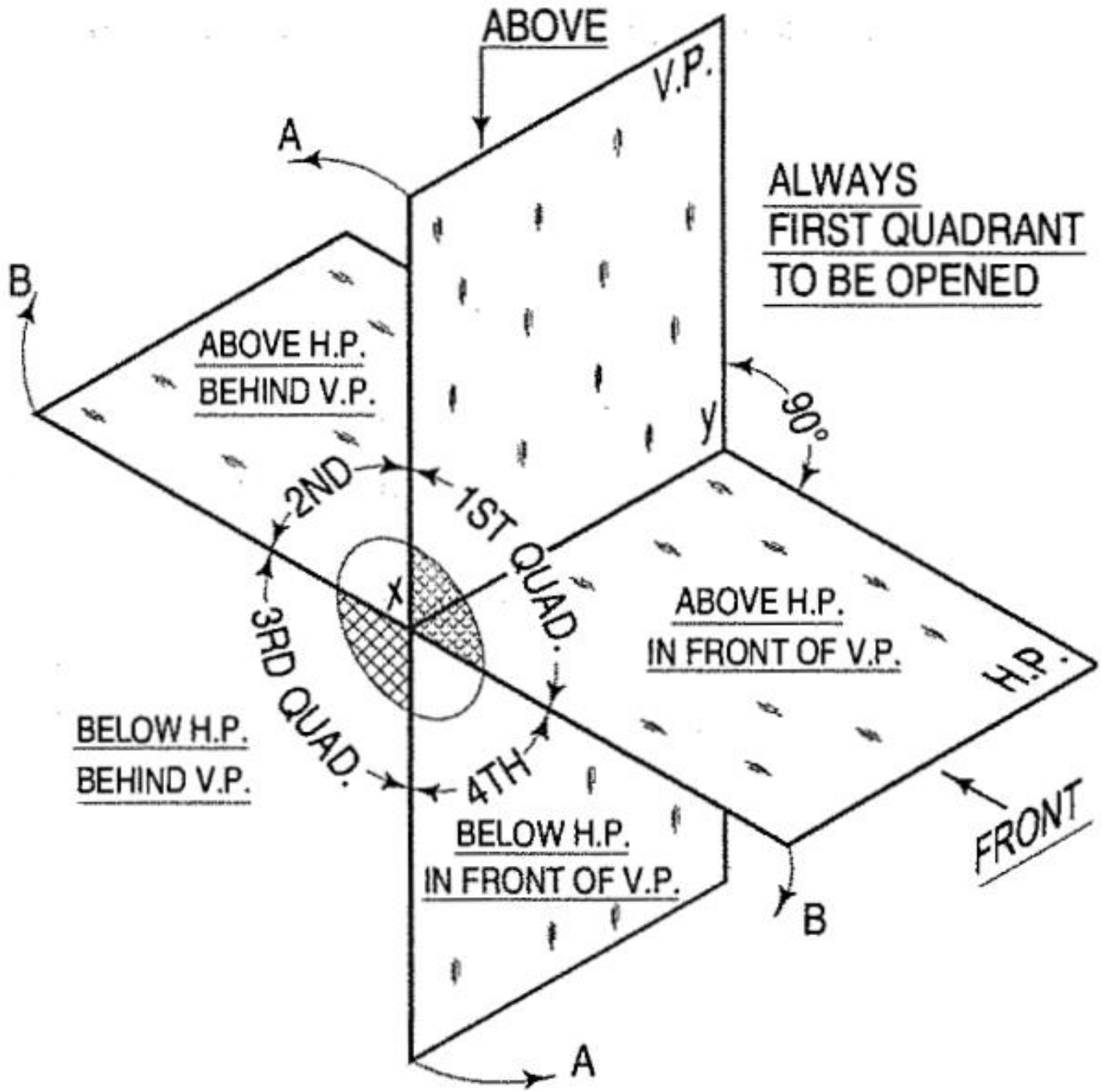
ABOVE
V.P.
A
ALWAYS
FIRST QUADRANT
TO BE OPENED
B
ABOVE H.P.
BEHIND V.P.
y
90°
2ND
1ST QUAD.
X
ABOVE H.P.
IN FRONT OF V.P.
H.P.
3RD QUAD.
BELOW H.P.
BEHIND V.P.
4TH
BELOW H.P.
IN FRONT OF V.P.
FRONT
B
A

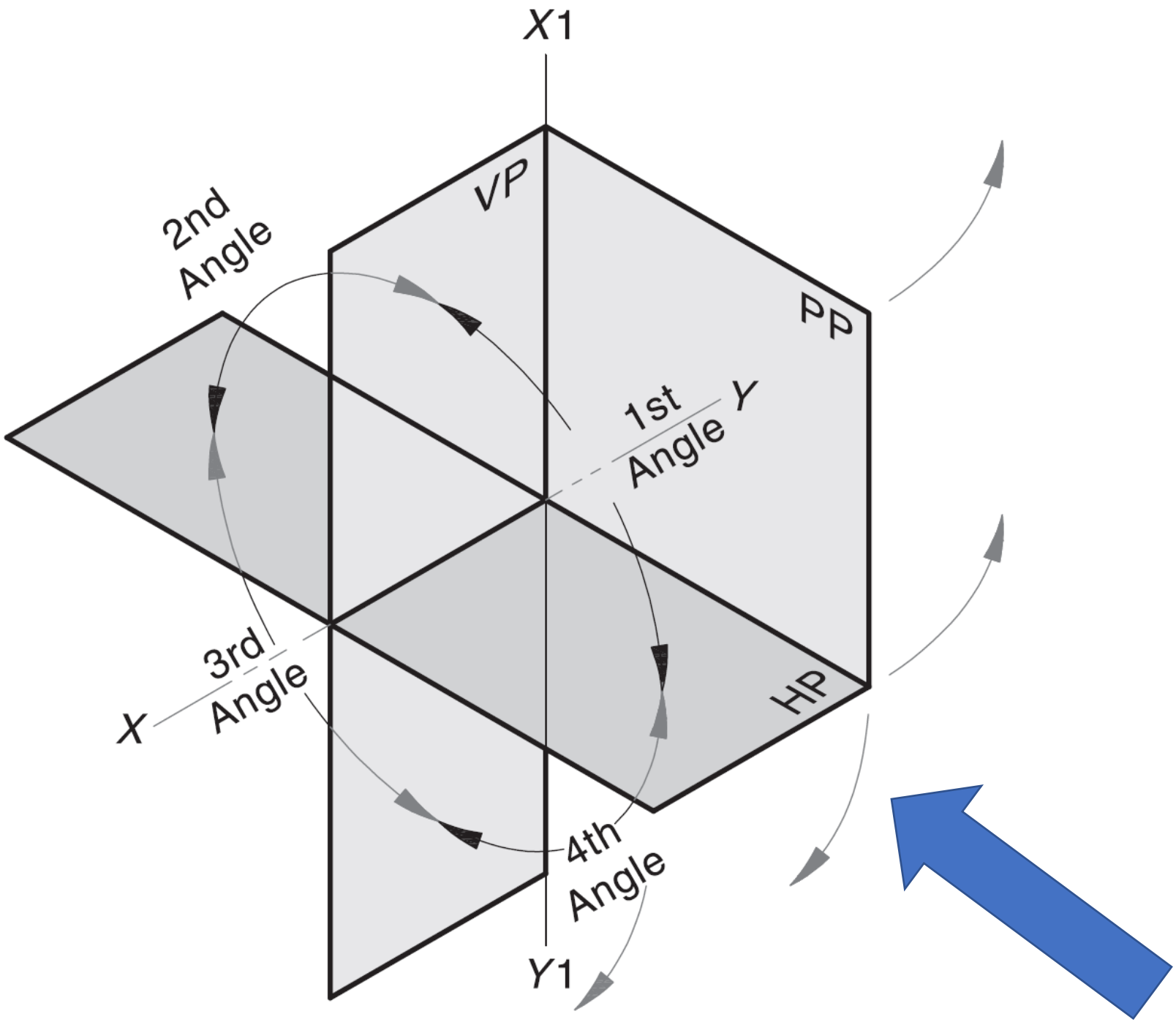
X1
VP
2nd
Angle
PP
1st
Angle
Y
3rd
Angle
X
HP
4th
Angle
Y1

FIRST ANGLE PROJECTION

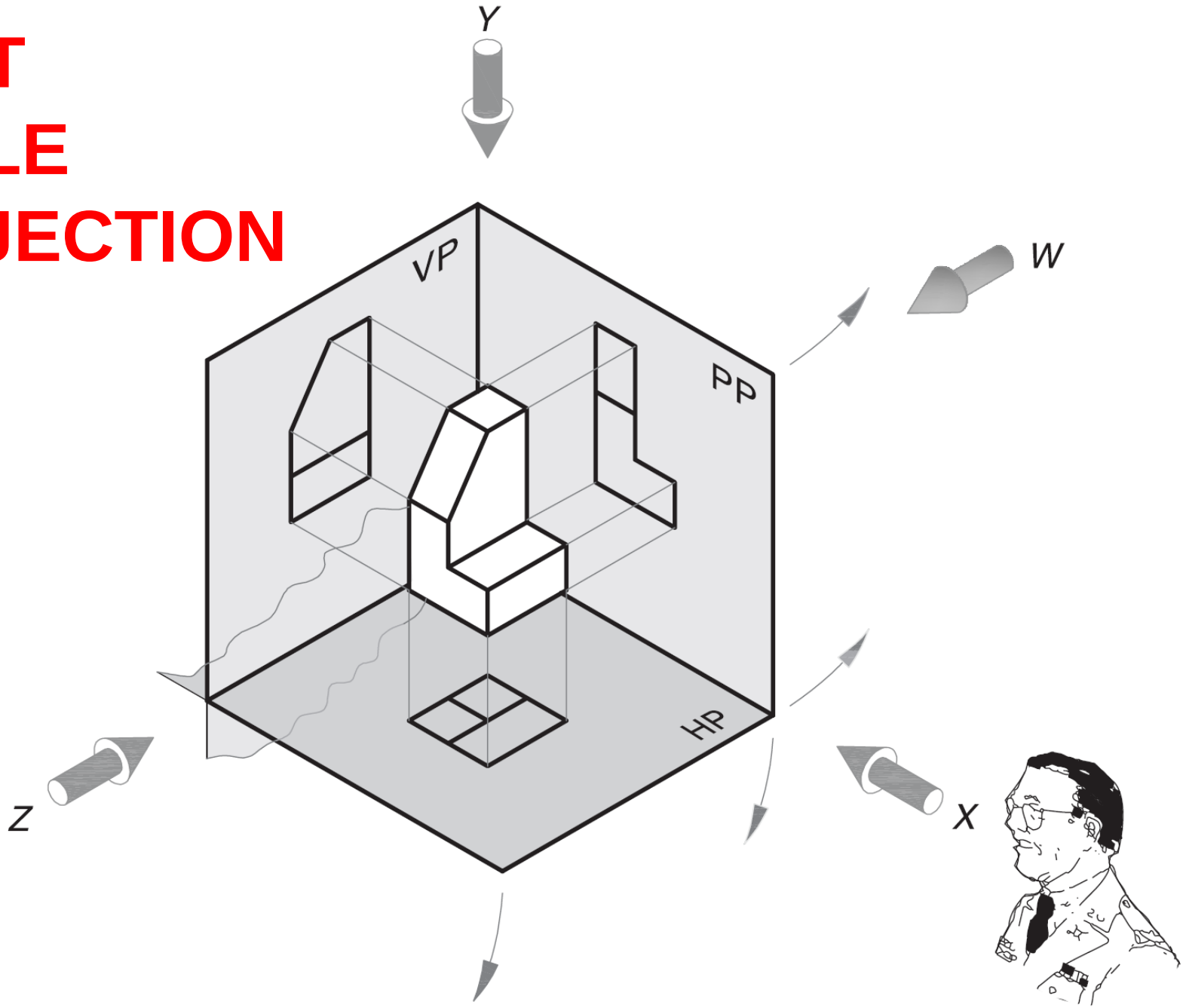

(a) Object in First Angle

First Angle Projection

- **<u>Object</u>** is between **2D plane** (“paper”) and **observer**
  - Front view (F.V.) is at center
  - Top view (T.V.) is at bottom
  - Left hand side view (L.H.S.V.) is on the right
  - Right hand side view (R.H.S.V.) is on the left

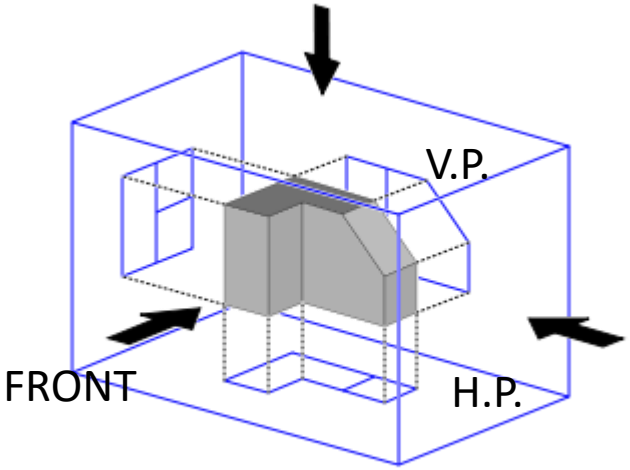

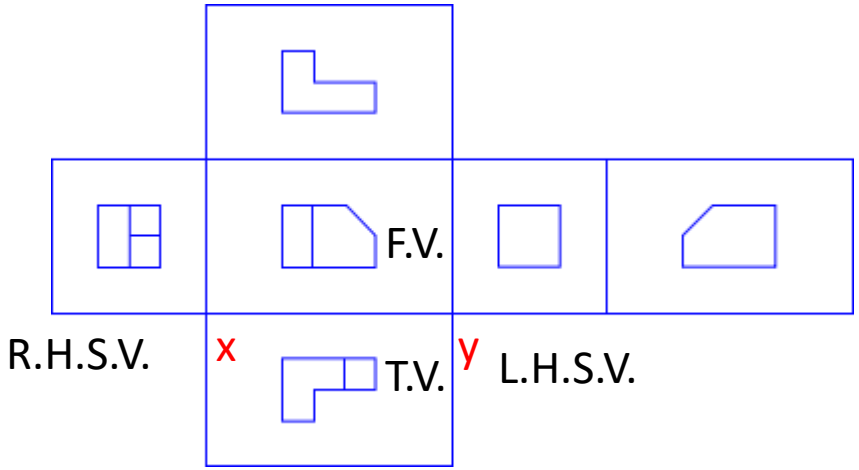

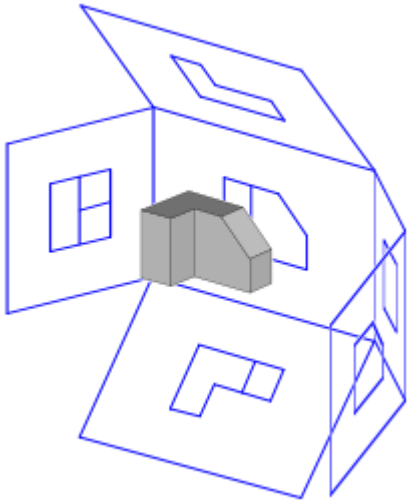

Used In India

Third Angle Projection

- **<u>2D Plane</u>** (“paper”) is between **object** and **observer**
  - Front view (F.V.) is at center
  - Top view (T.V.) is at top
  - Left hand side view (L.H.S.V.) is on the left
  - Right hand side view (R.H.S.V.) is on the right

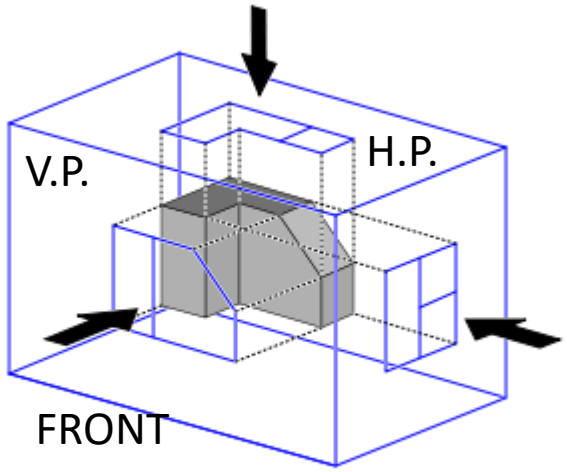

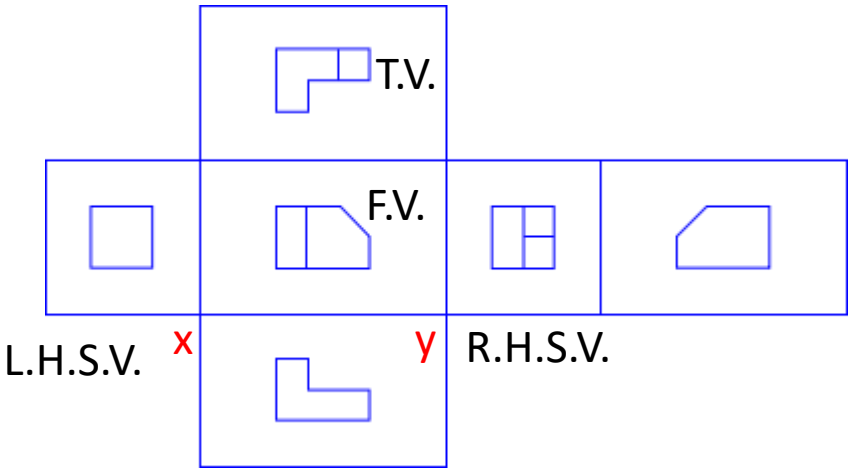

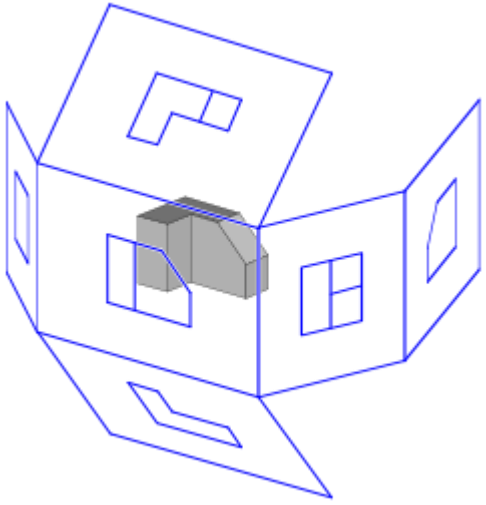

First angle projection

Object lies between projection plane and observer

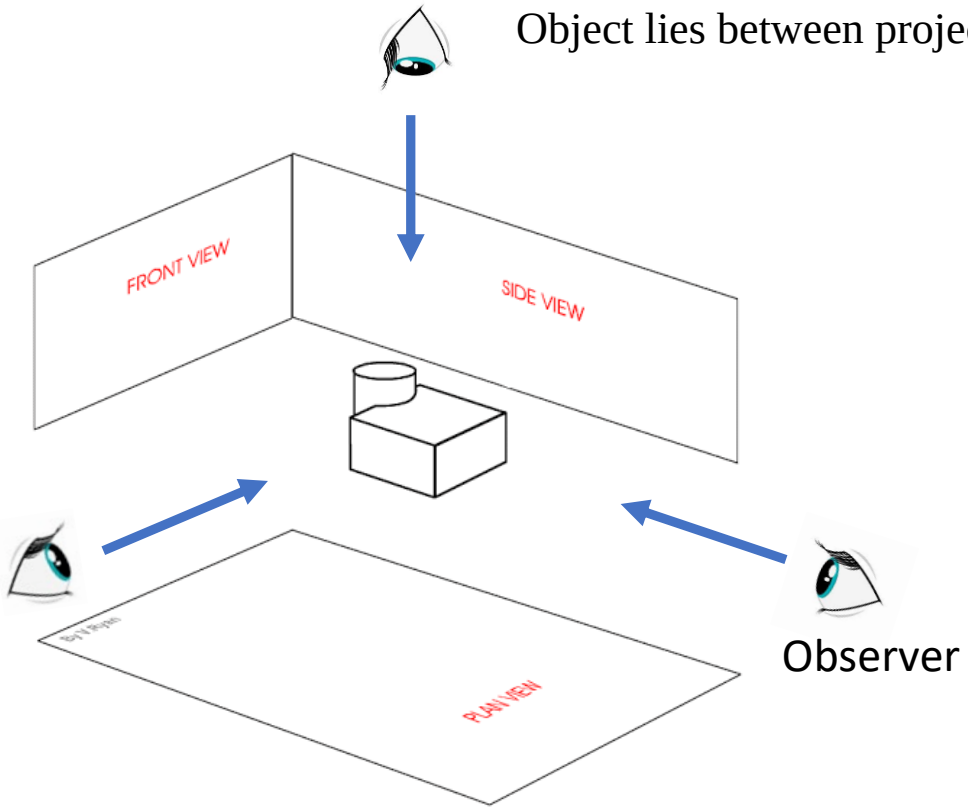

Observer

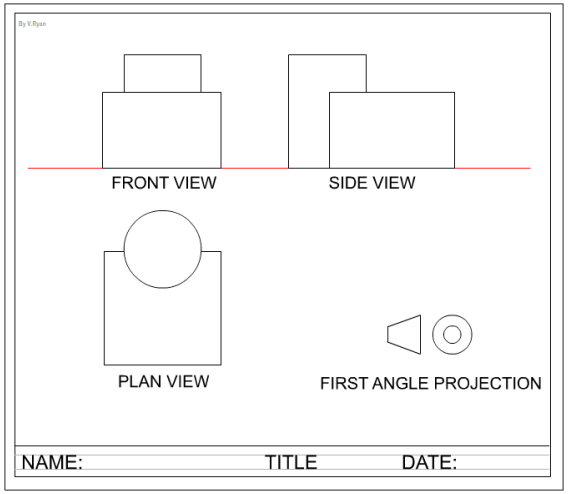

Typical drawing sheet drawn in first angle projection

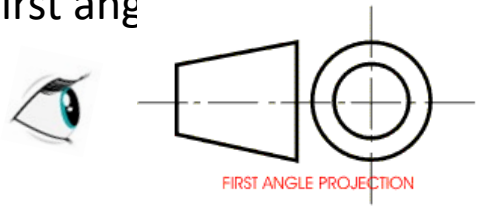

symbol

https://technologystudent.com/designpro/ortho1.htm

Third angle projection

Projection plane lies between object and observer

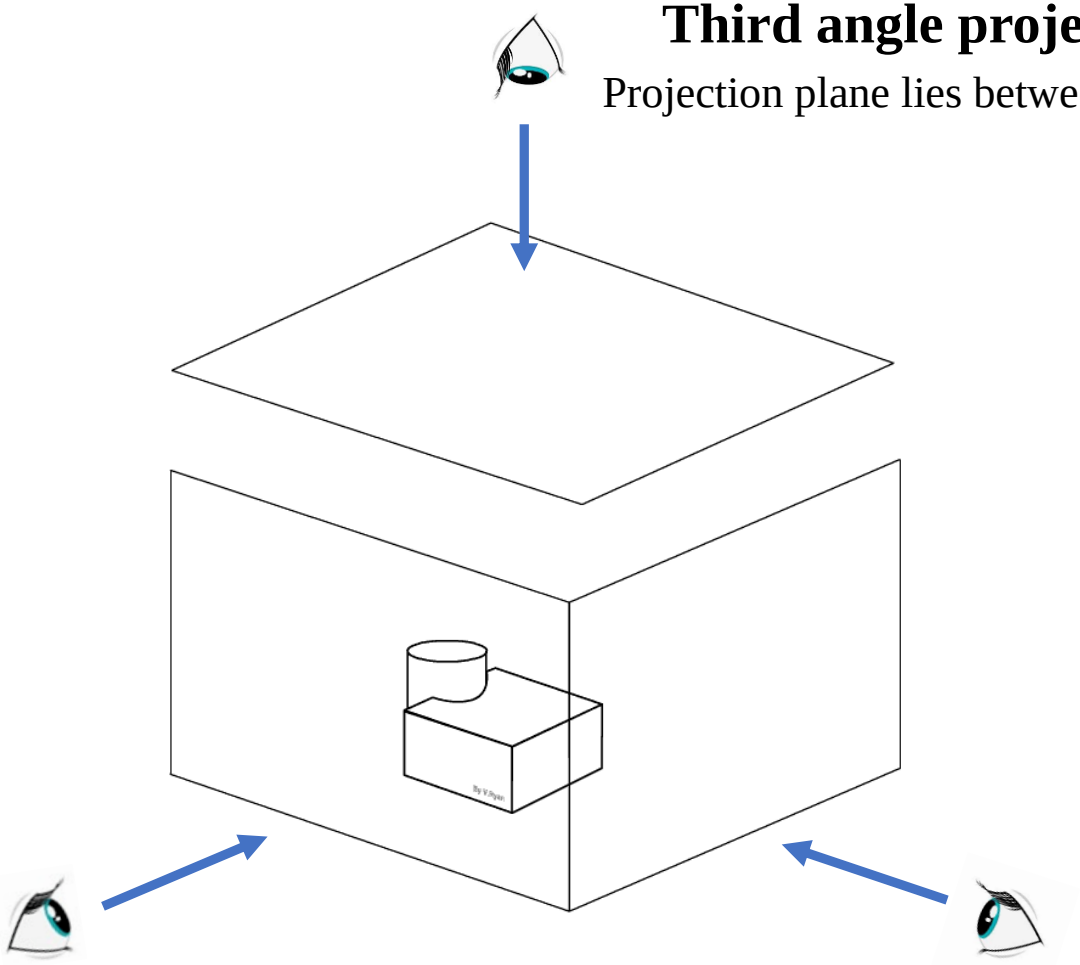

Observer

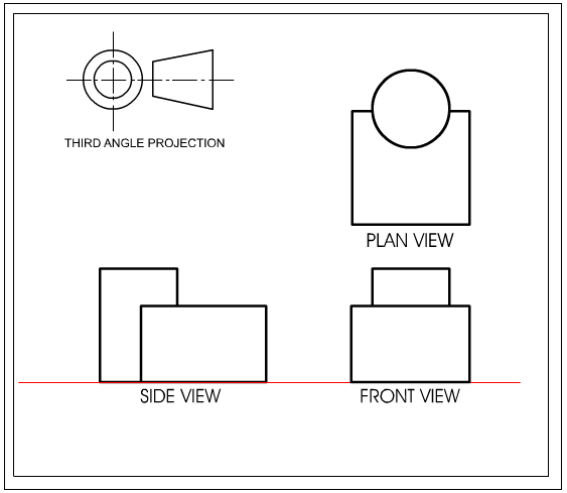

Typical drawing sheet drawn in third angle projection

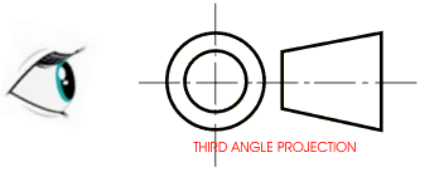

symbol

https://technologystudent.com/designpro/ortho2.htm

First angle projection	Third angle projection
• Front view (FV) is above the top view (TV) • Left hand side view (LHSV) is on the right of front view • Right hand side view (RHSV) is on the left of front view	• Front is below the top view • Left hand side view (LHSV) is on the left of front view • Right hand side view (RHSV) is on the right of front view

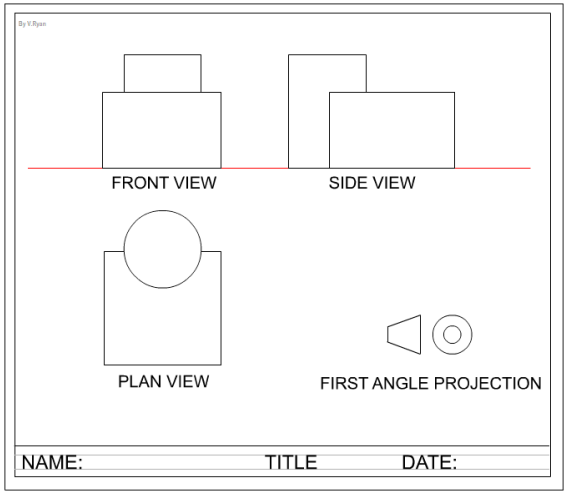

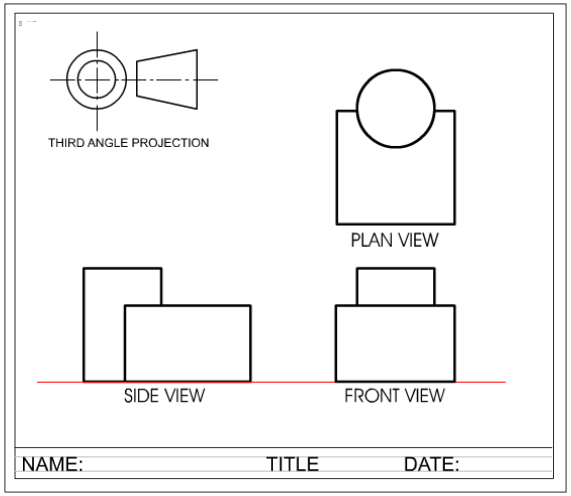

In India, usually First Angle Projection is used

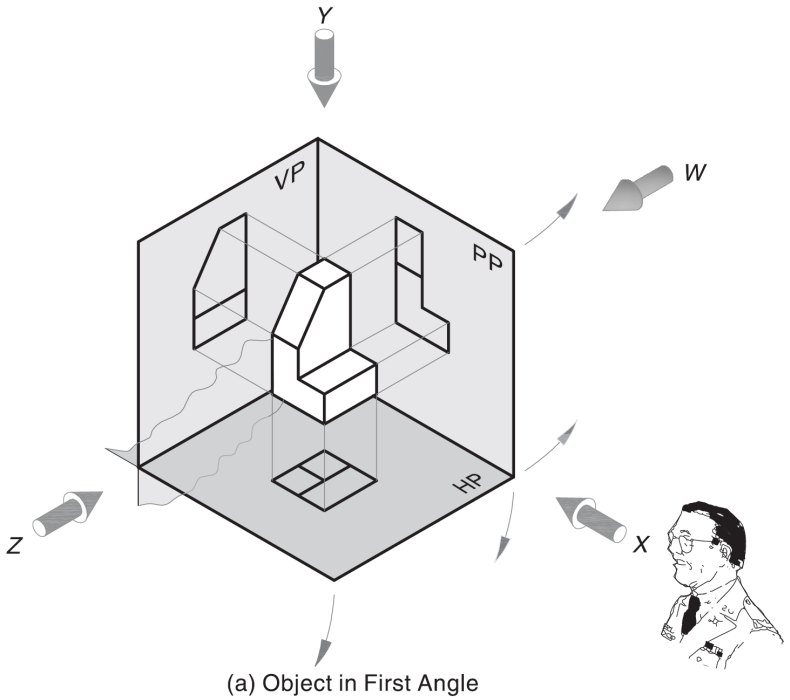

(a) Object in First Angle

FIRST ANGLE PROJECTION

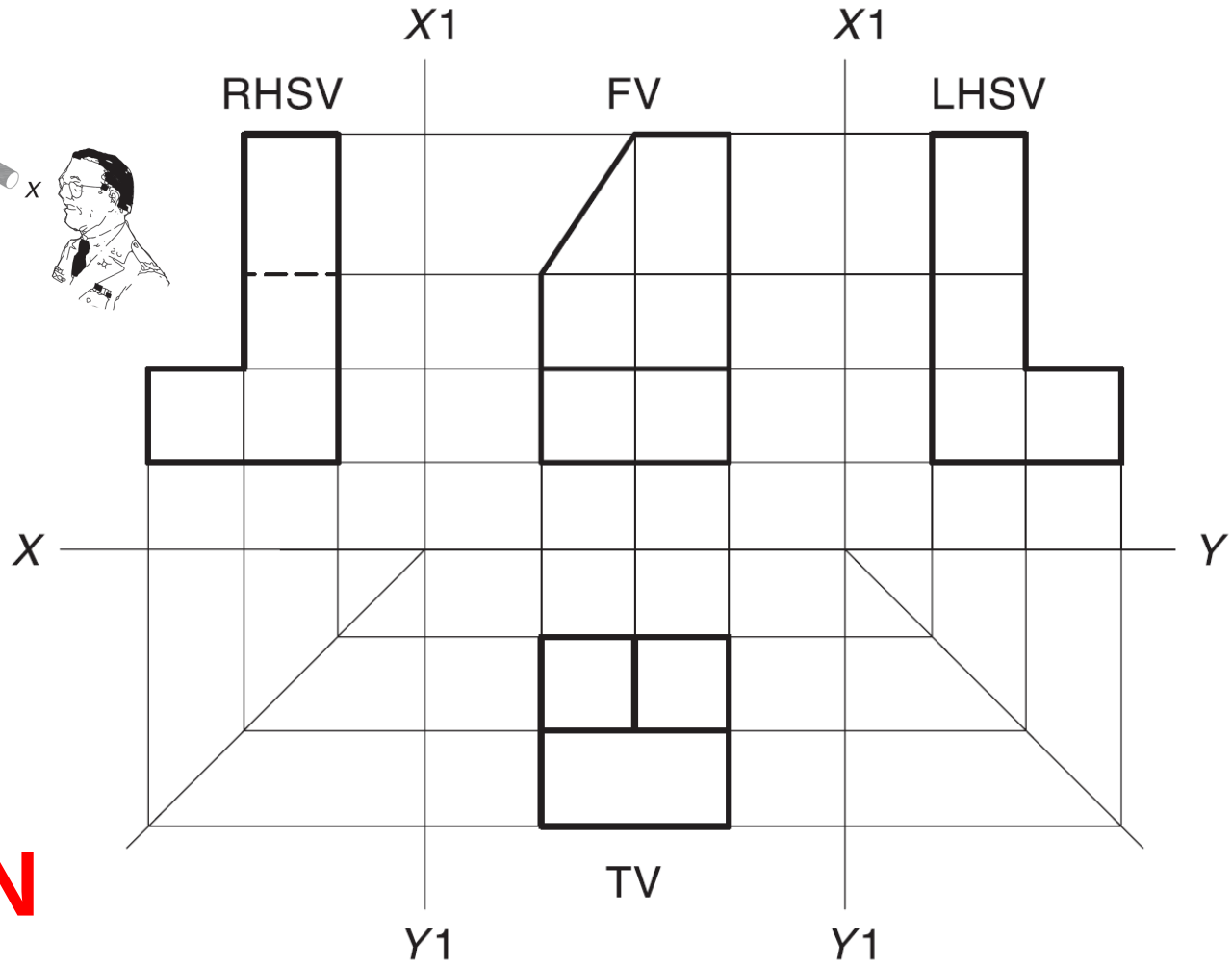

(b) Location of the Principal Views

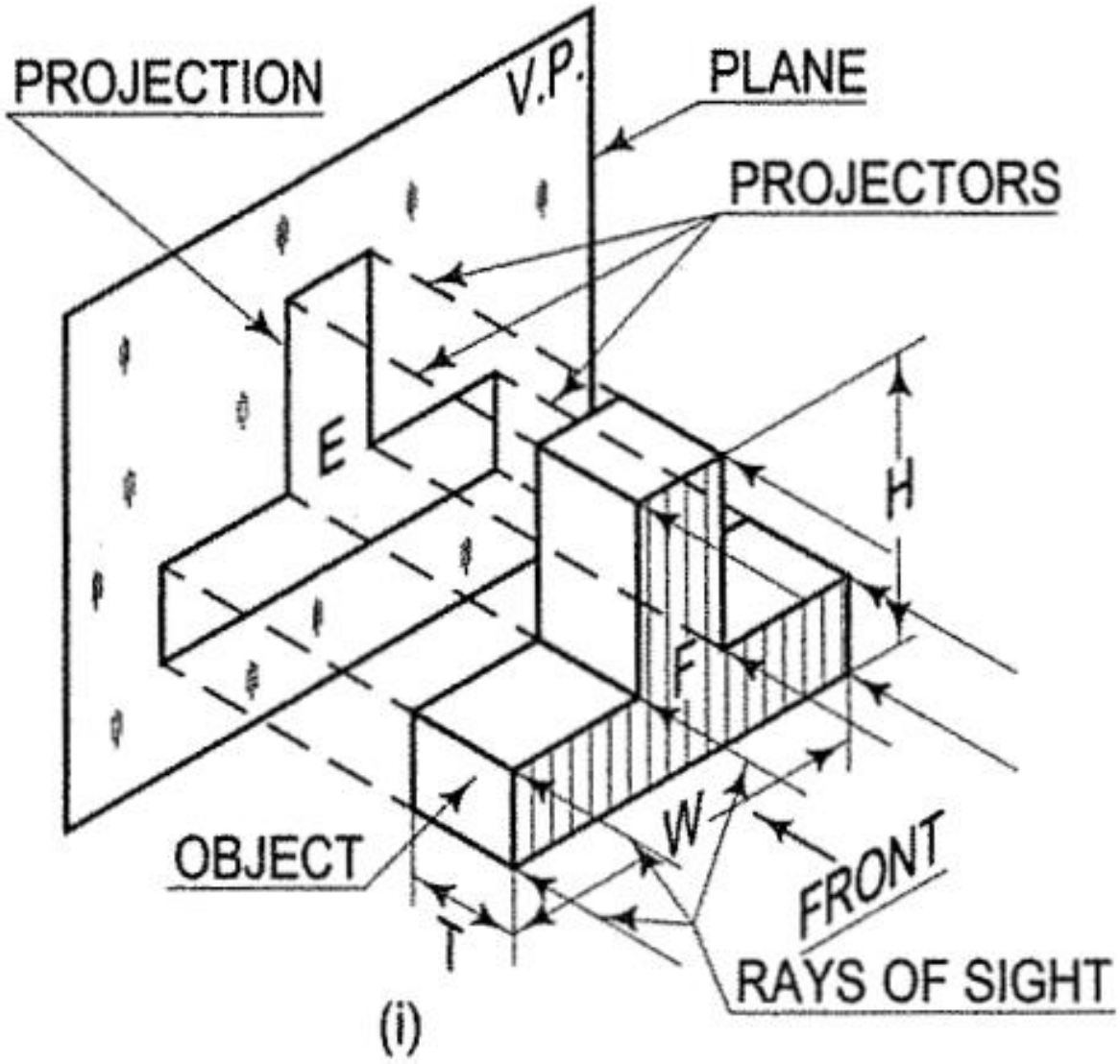
PROJECTION
V.P.
PLANE
PROJECTORS
E
H
F
W
OBJECT
FRONT
T
RAYS OF SIGHT

(i)

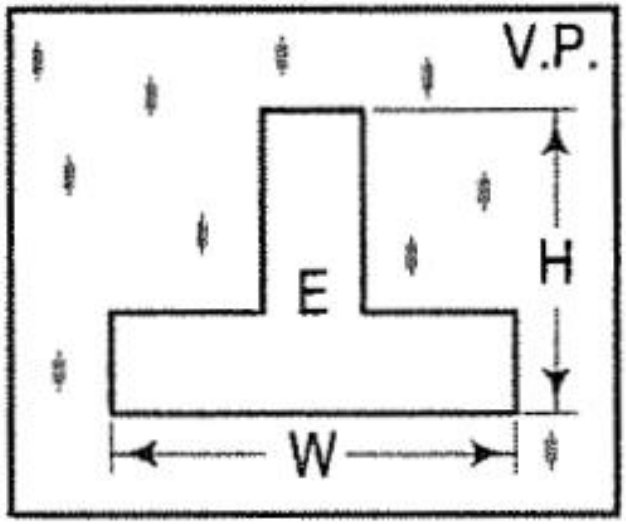
V.P.
H
E
W

(ii)

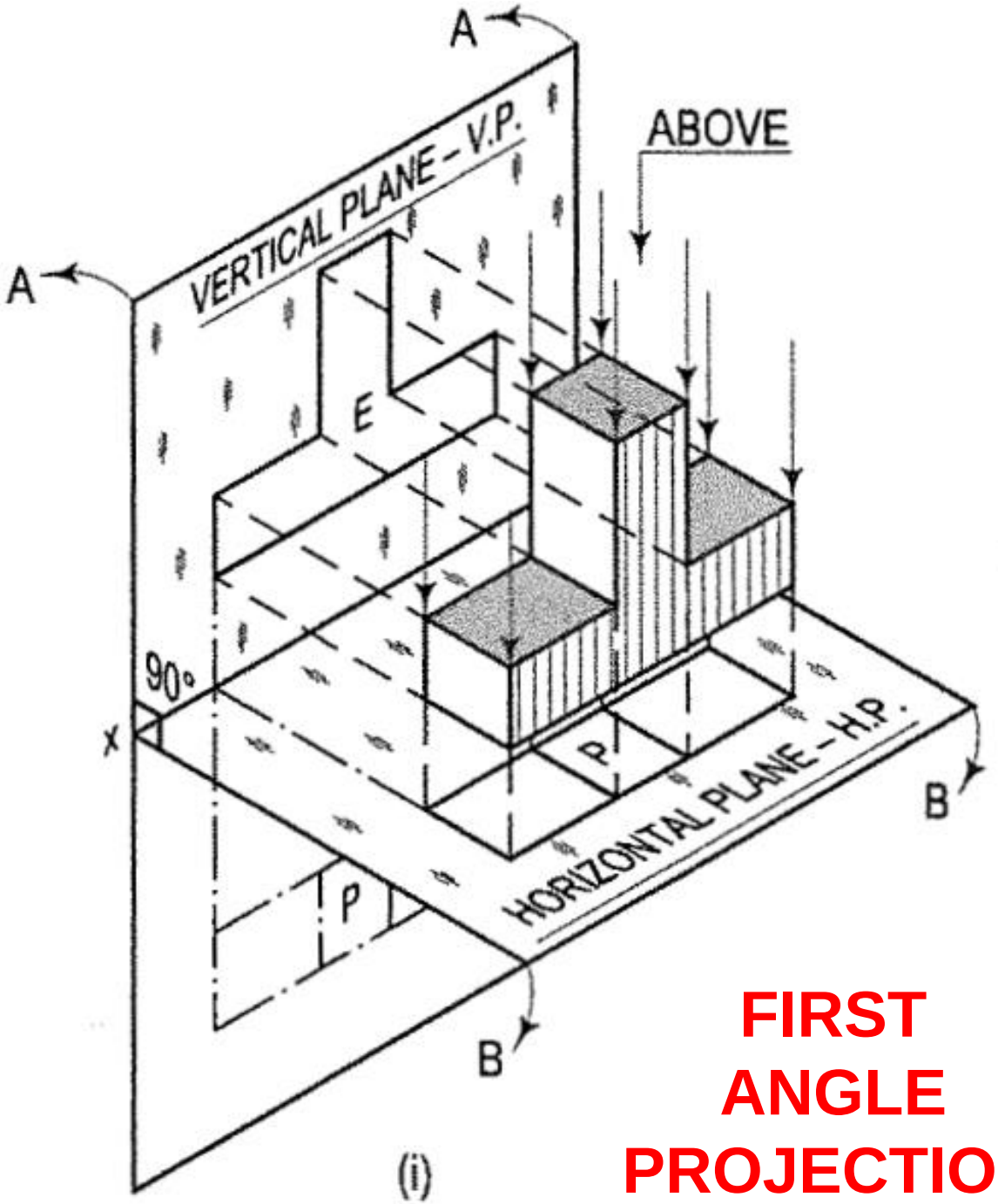

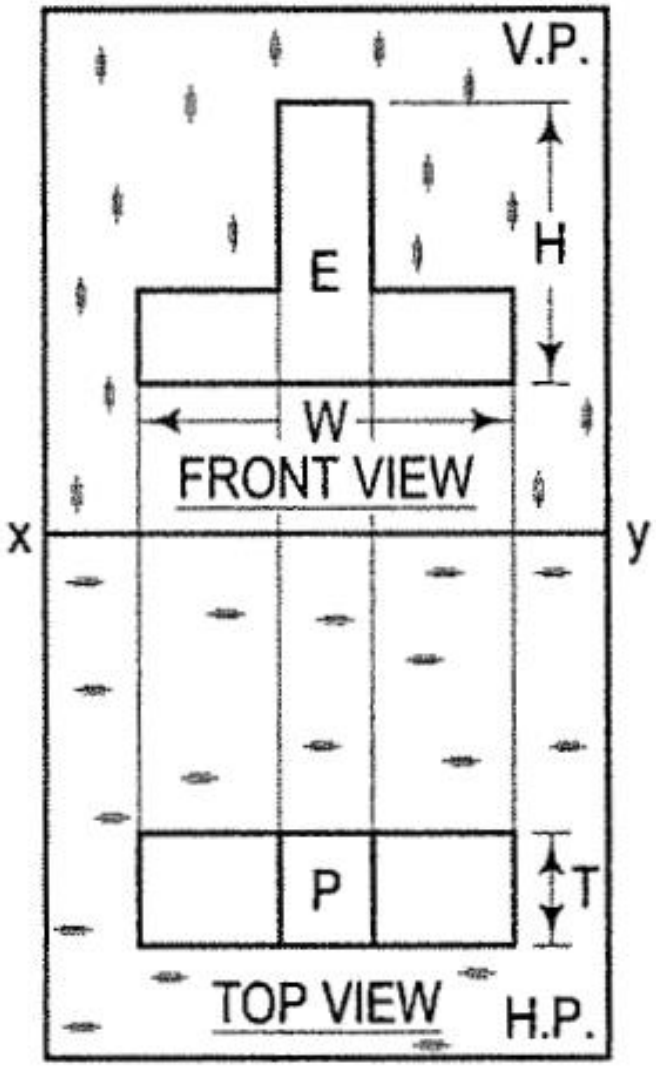

FIRST ANGLE PROJECTION

THIRD ANGLE PROJECTION

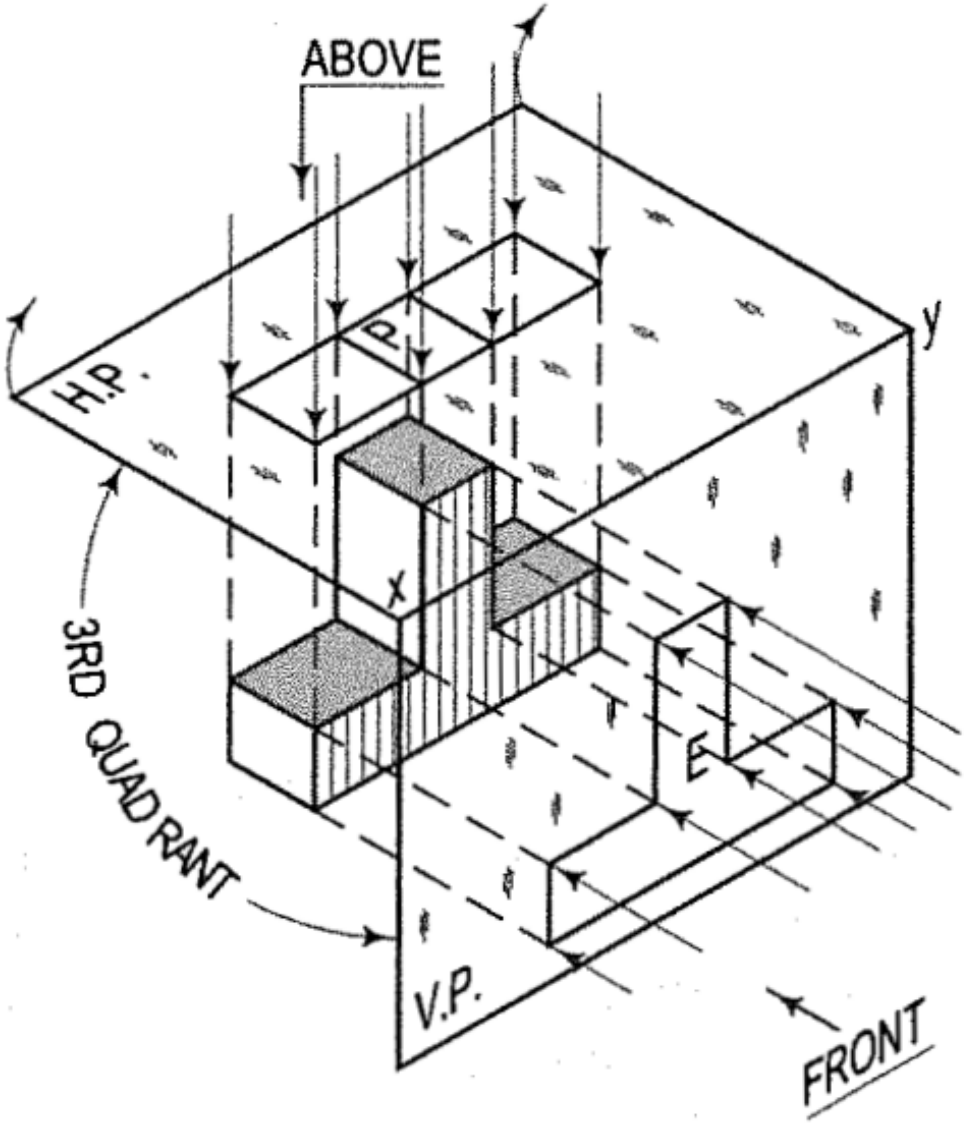

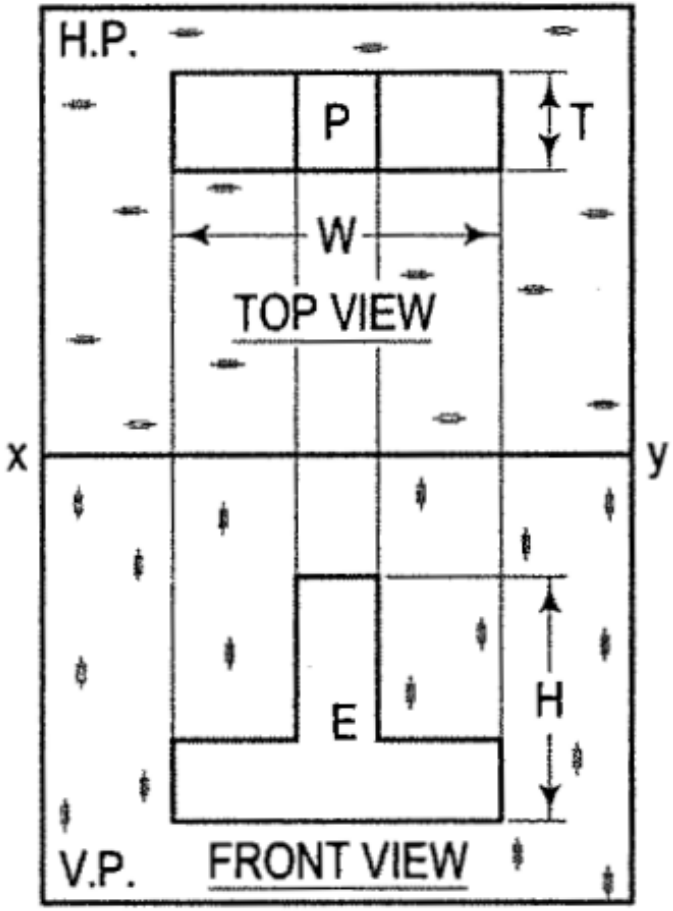

FIRST ANGLE PROJECTION METHOD

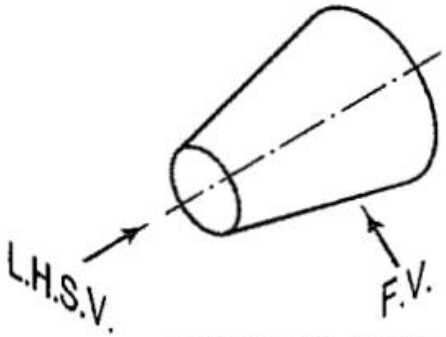

PICTORIAL VIEW

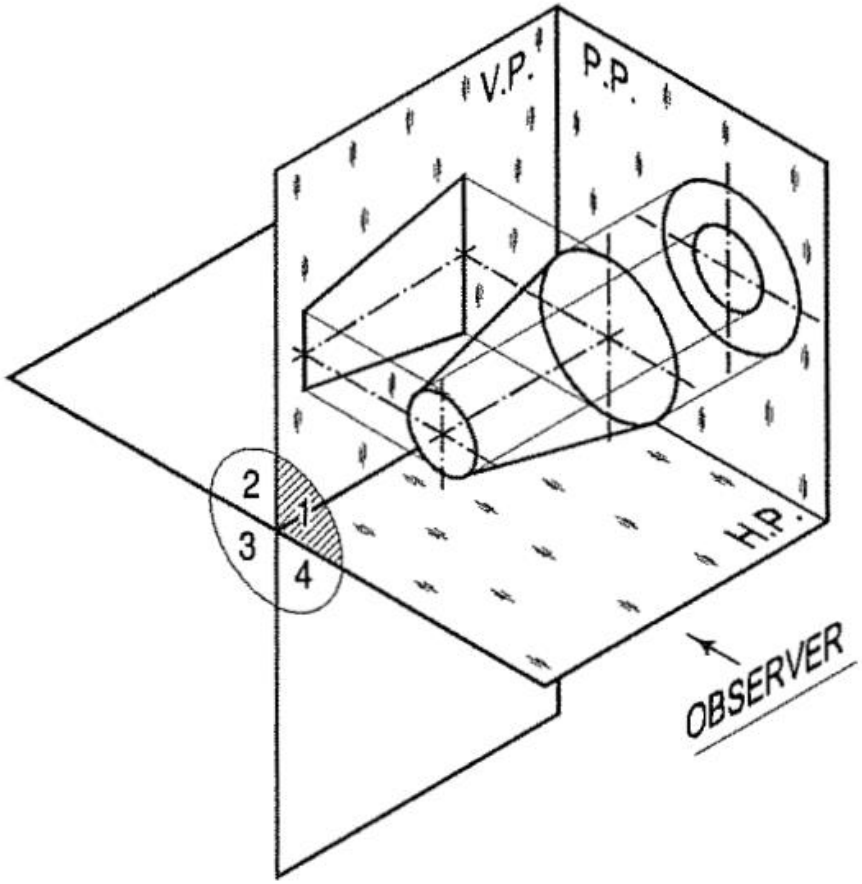

THIRD ANGLE PROJECTION METHOD

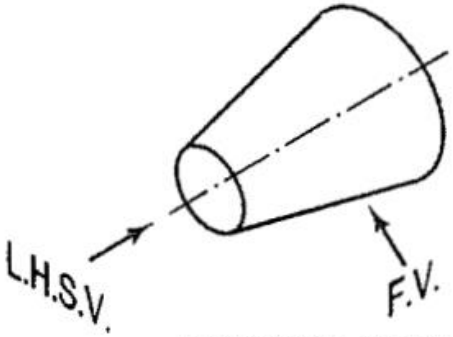

PICTORIAL VIEW

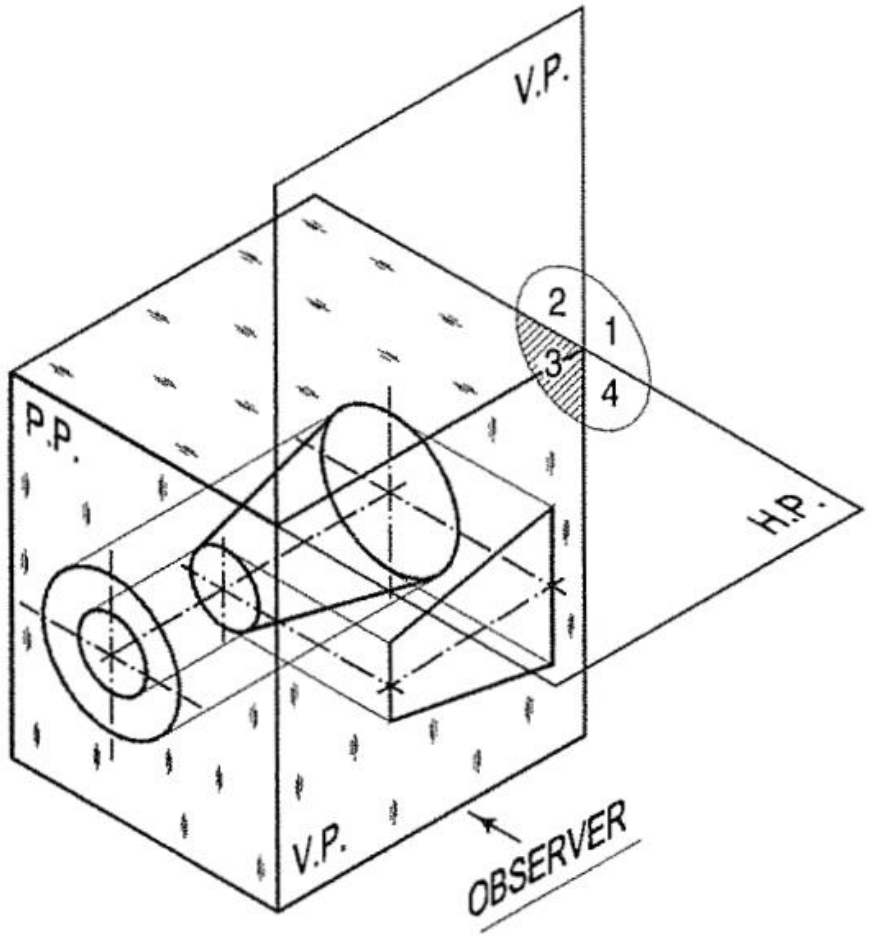

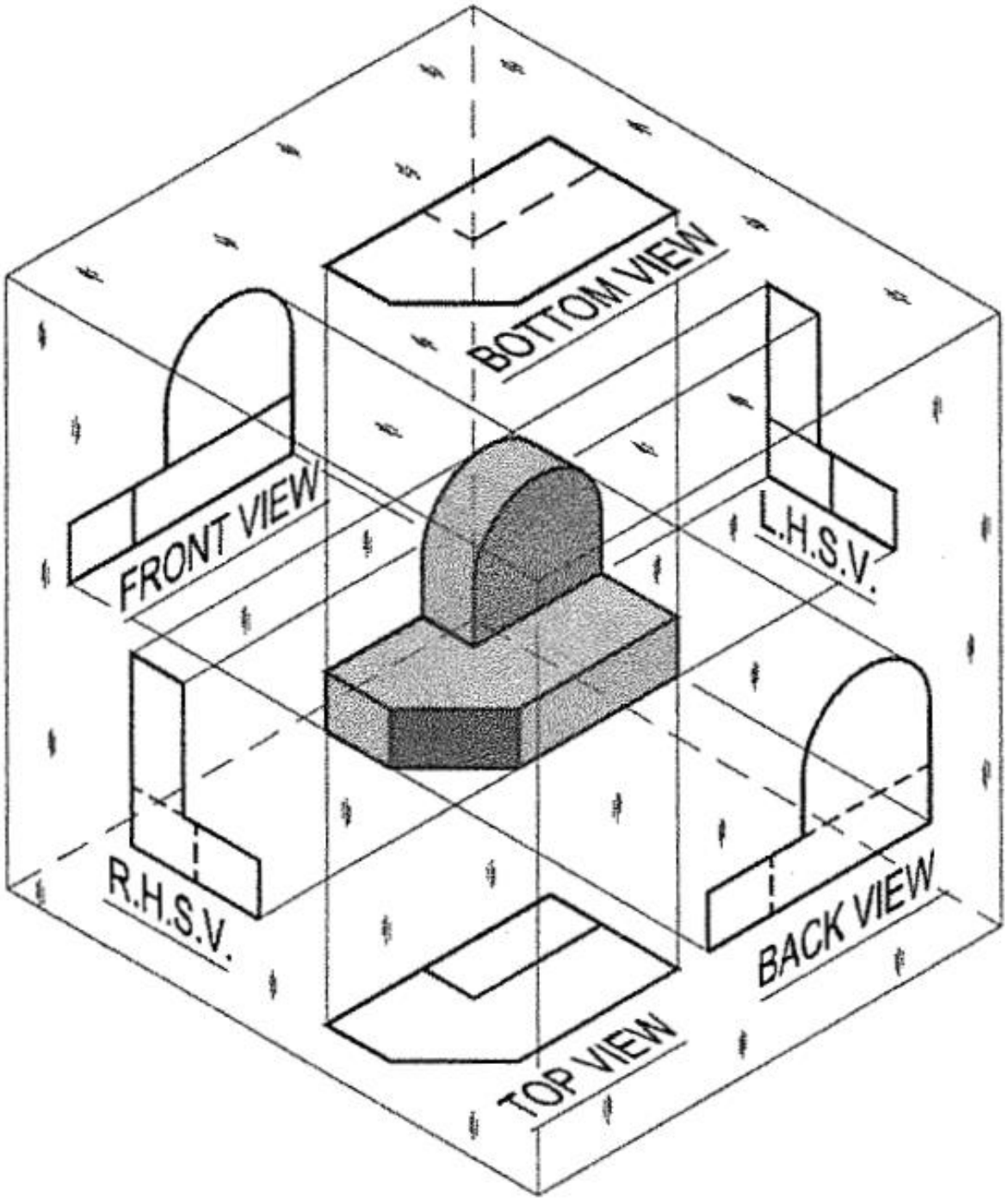
BOTTOM VIEW
FRONT VIEW
L.H.S.V.
R.H.S.V.
BACK VIEW
TOP VIEW

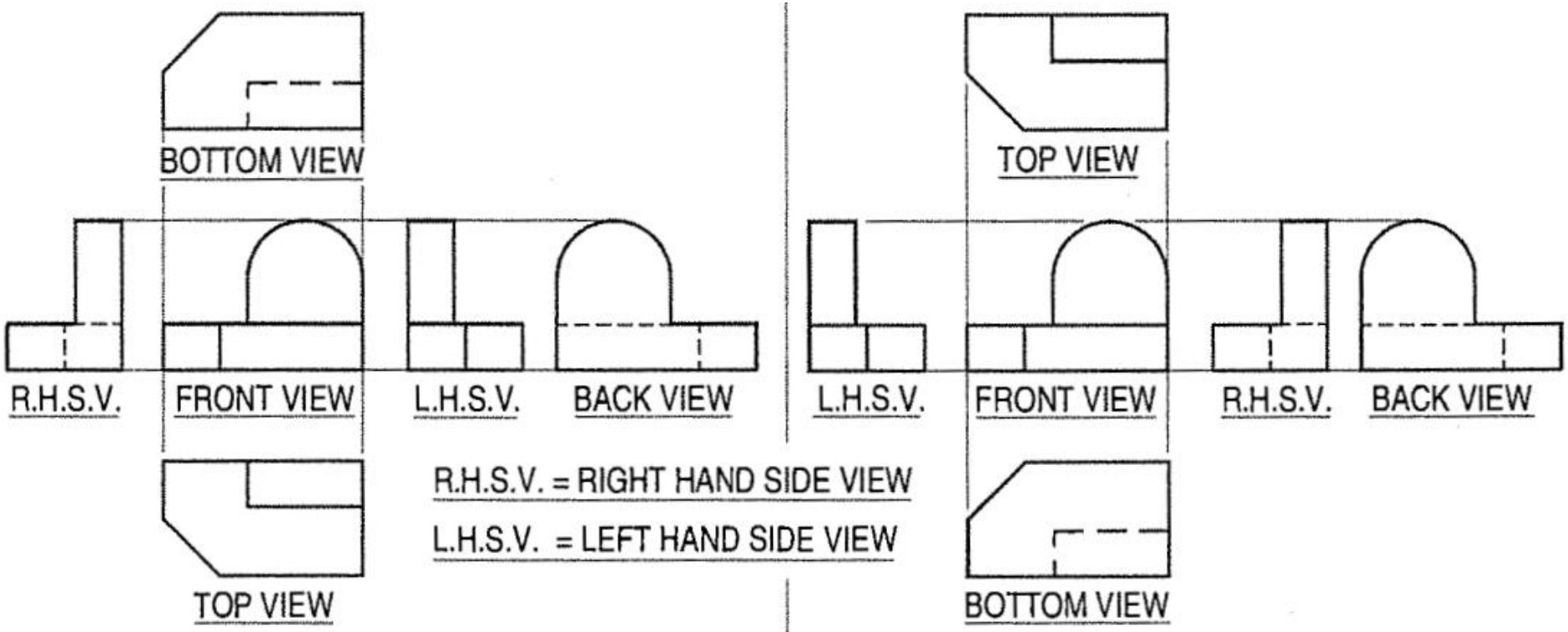

FIRST ANGLE PROJECTION

THIRD ANGLE PROJECTION

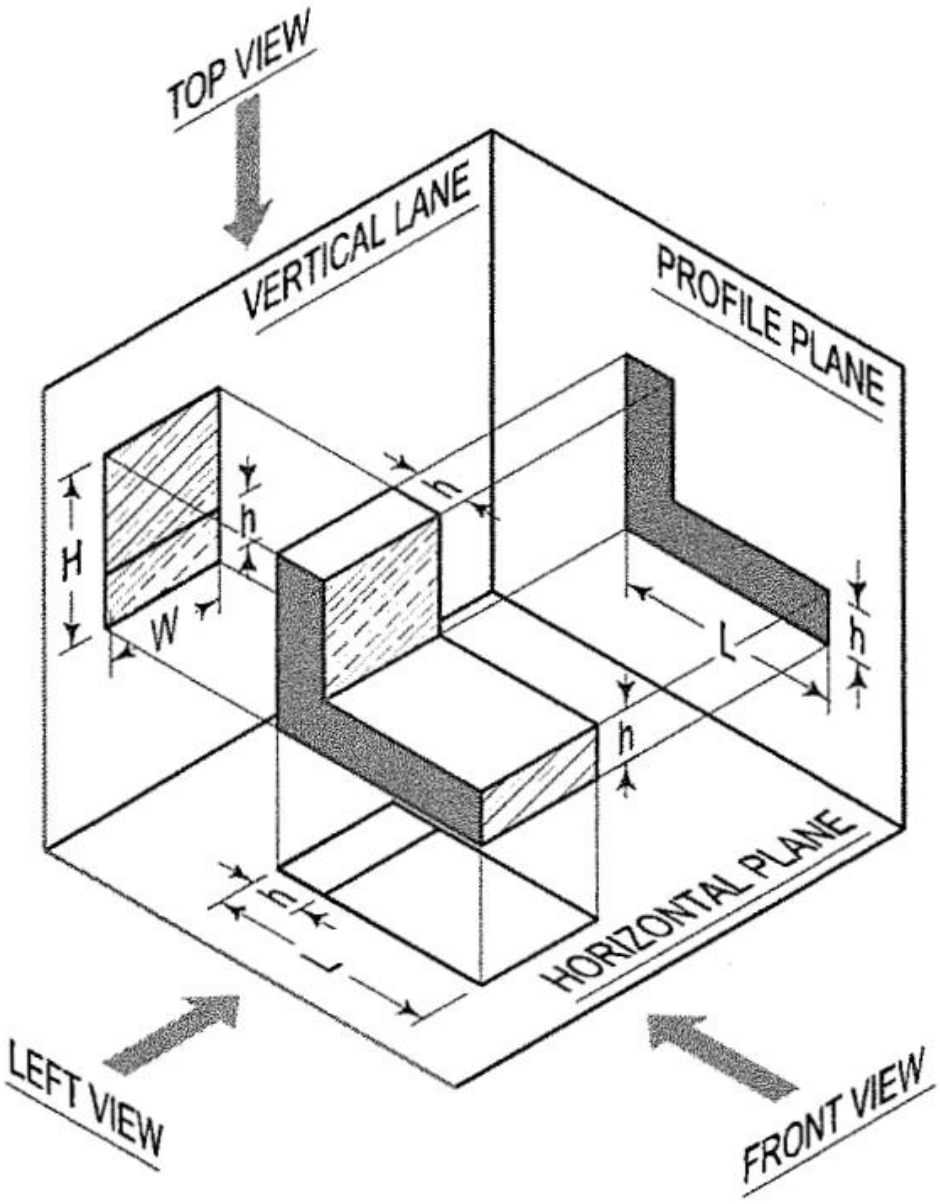
TOP VIEW
VERTICAL LANE
PROFILE PLANE
H
W
h
h
h
L
h
h
L
HORIZONTAL PLANE
LEFT VIEW
FRONT VIEW

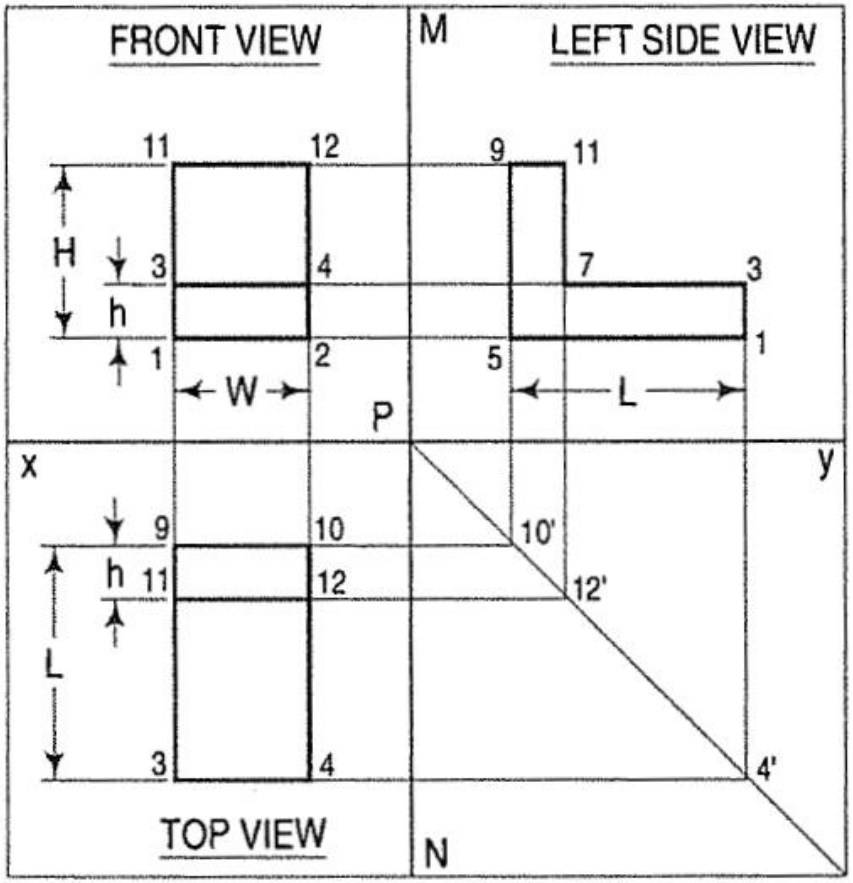
FRONT VIEW
M
LEFT SIDE VIEW
11
12
9
11
H
3
4
7
3
h
1
2
5
1
W
L
P
x
y
9
10
10'
h
11
12
12'
L
3
4
4'
TOP VIEW
N

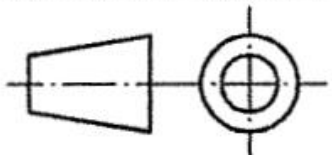

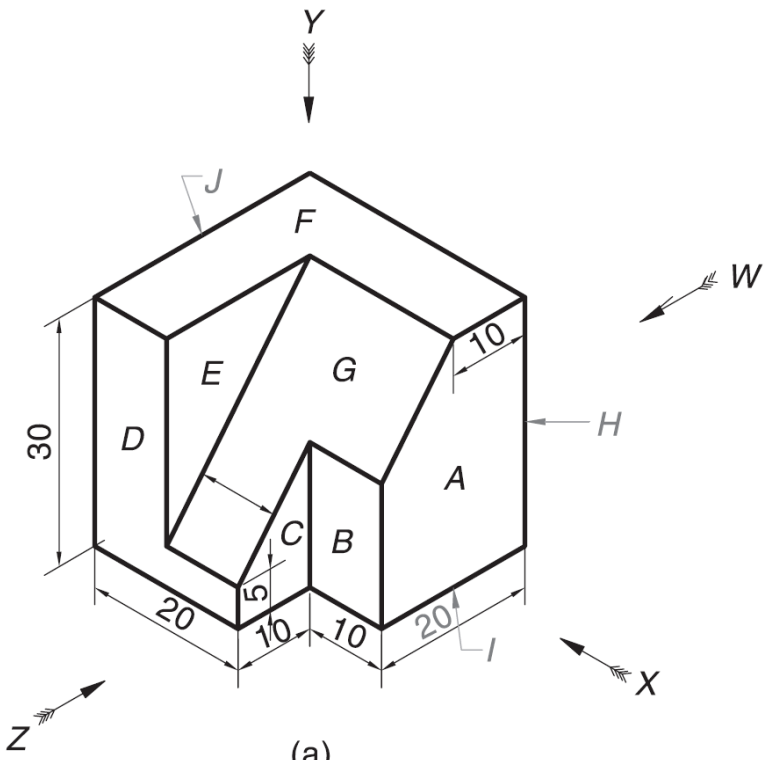

(a)

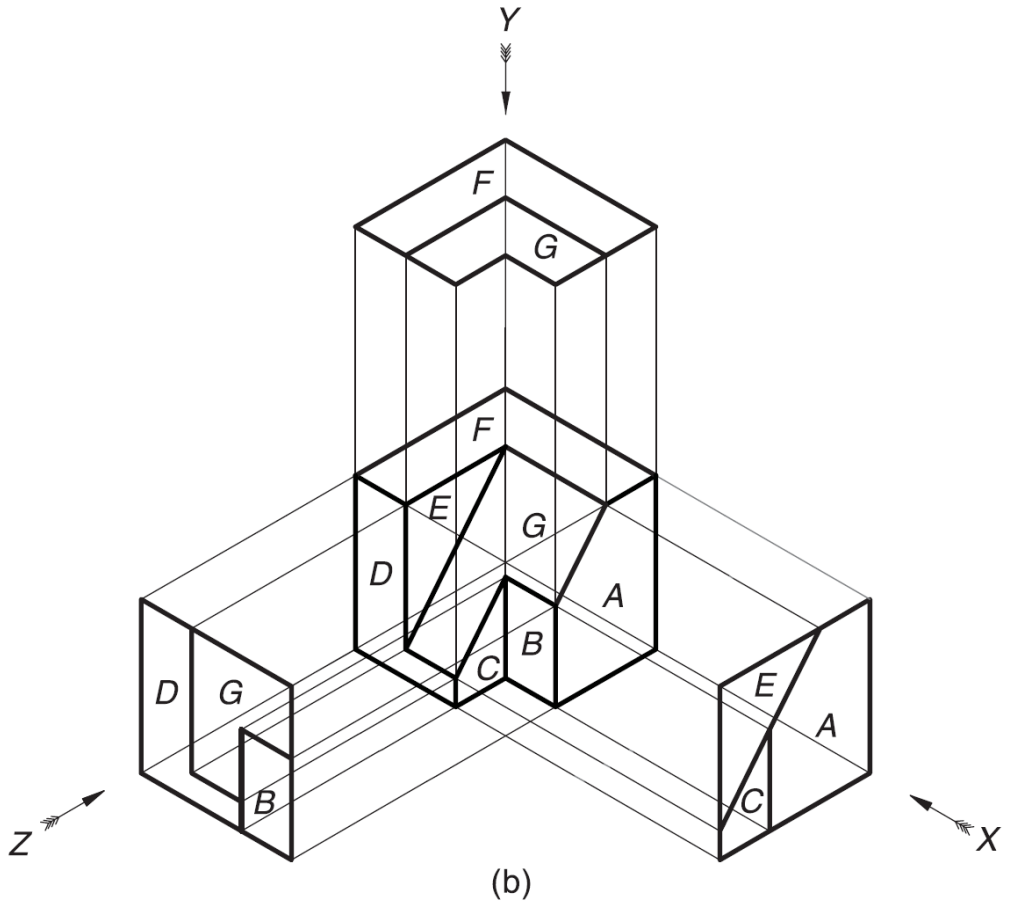

(b)

HIDDEN EDGES

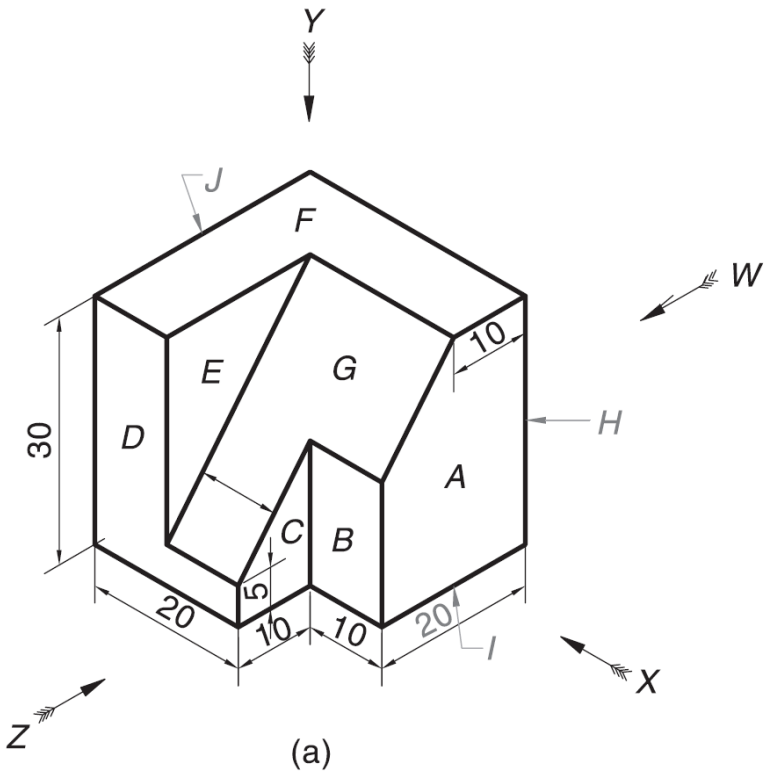

(a)

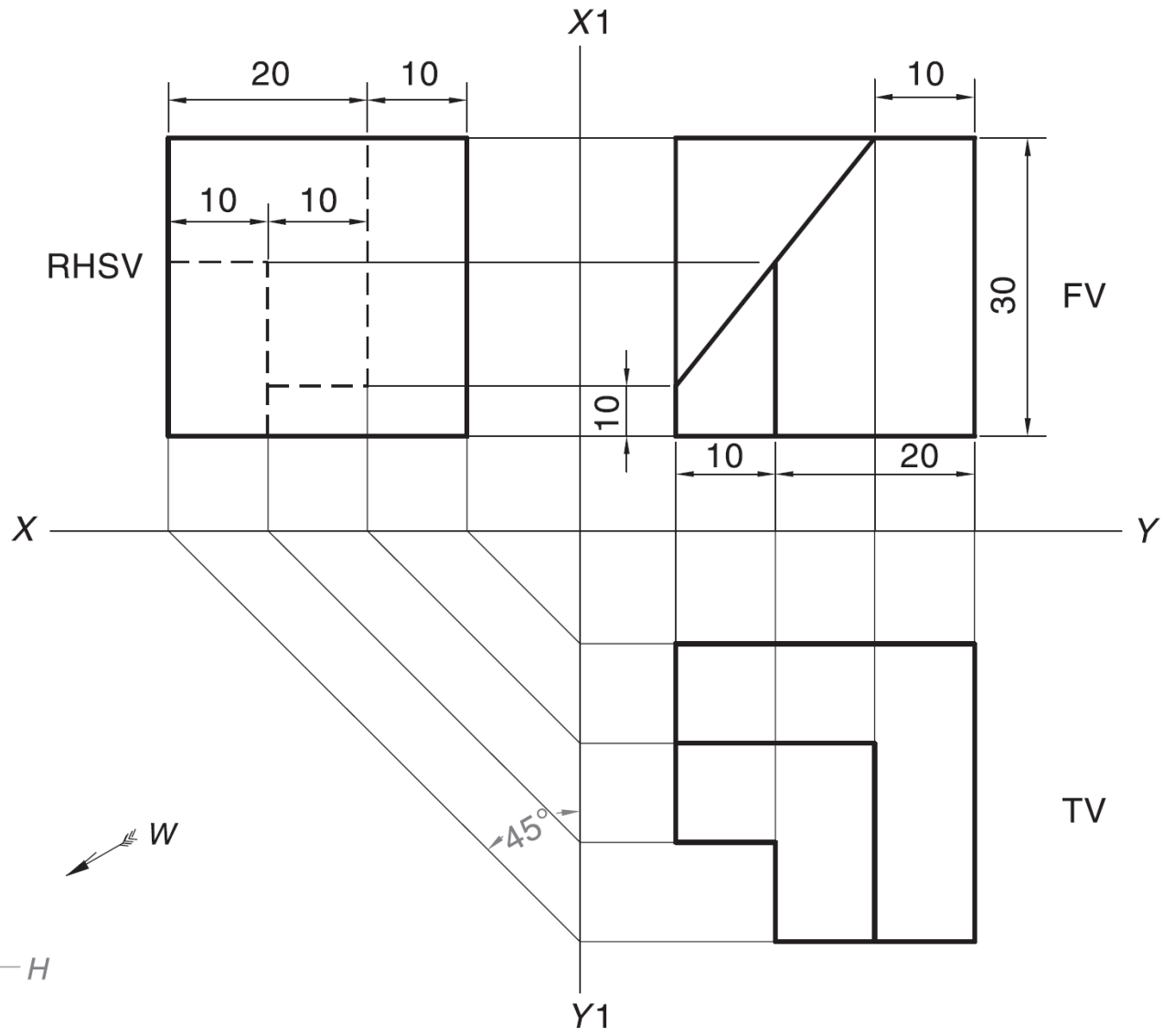

Note the method of dimensioning

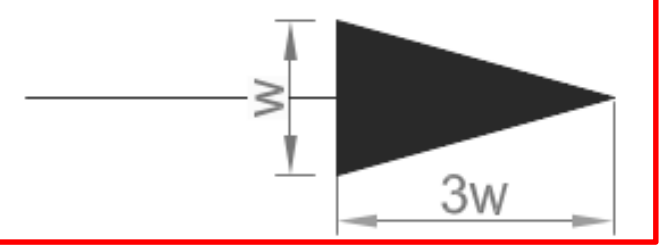

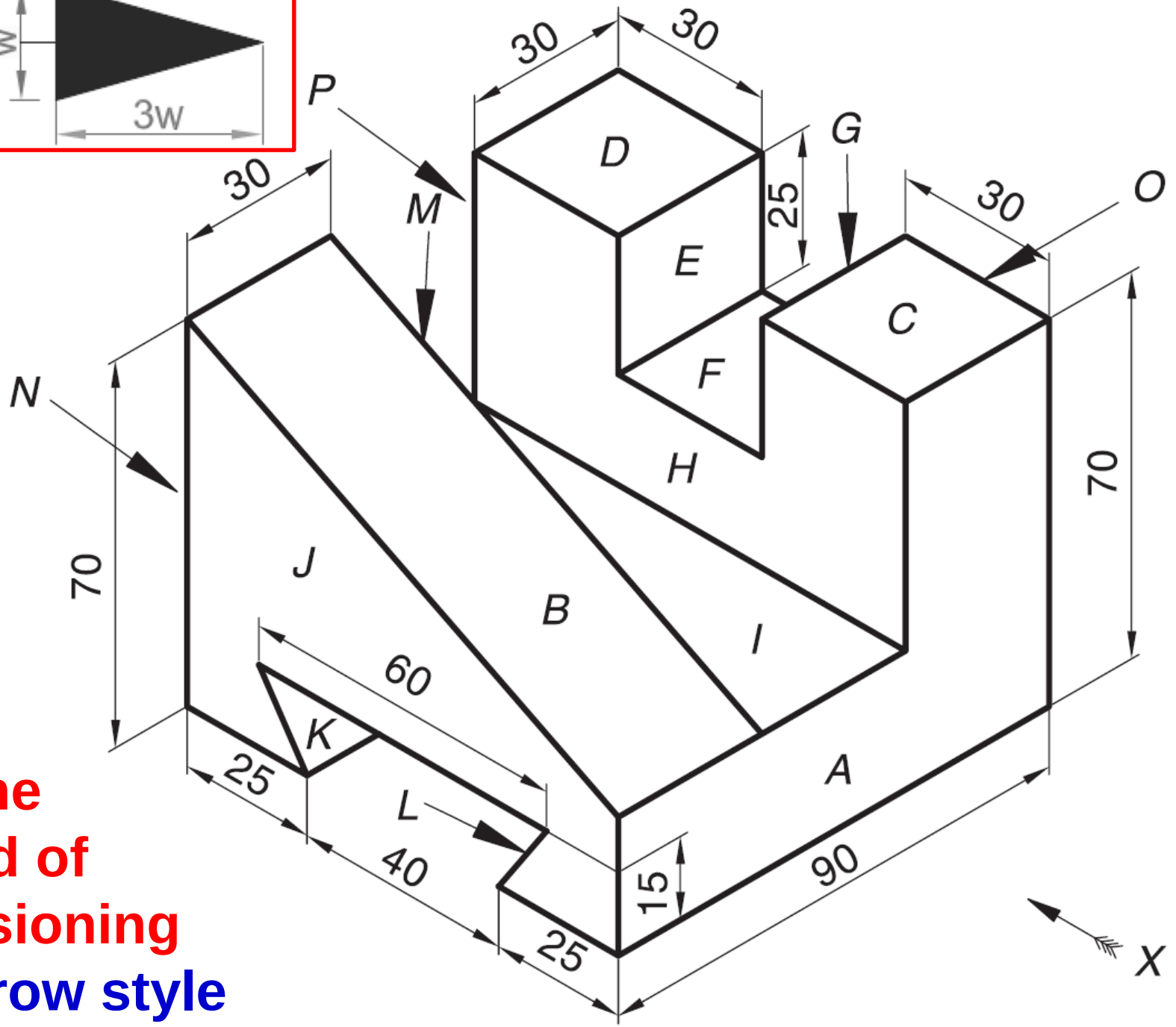

Note the method of dimensioning and arrow style

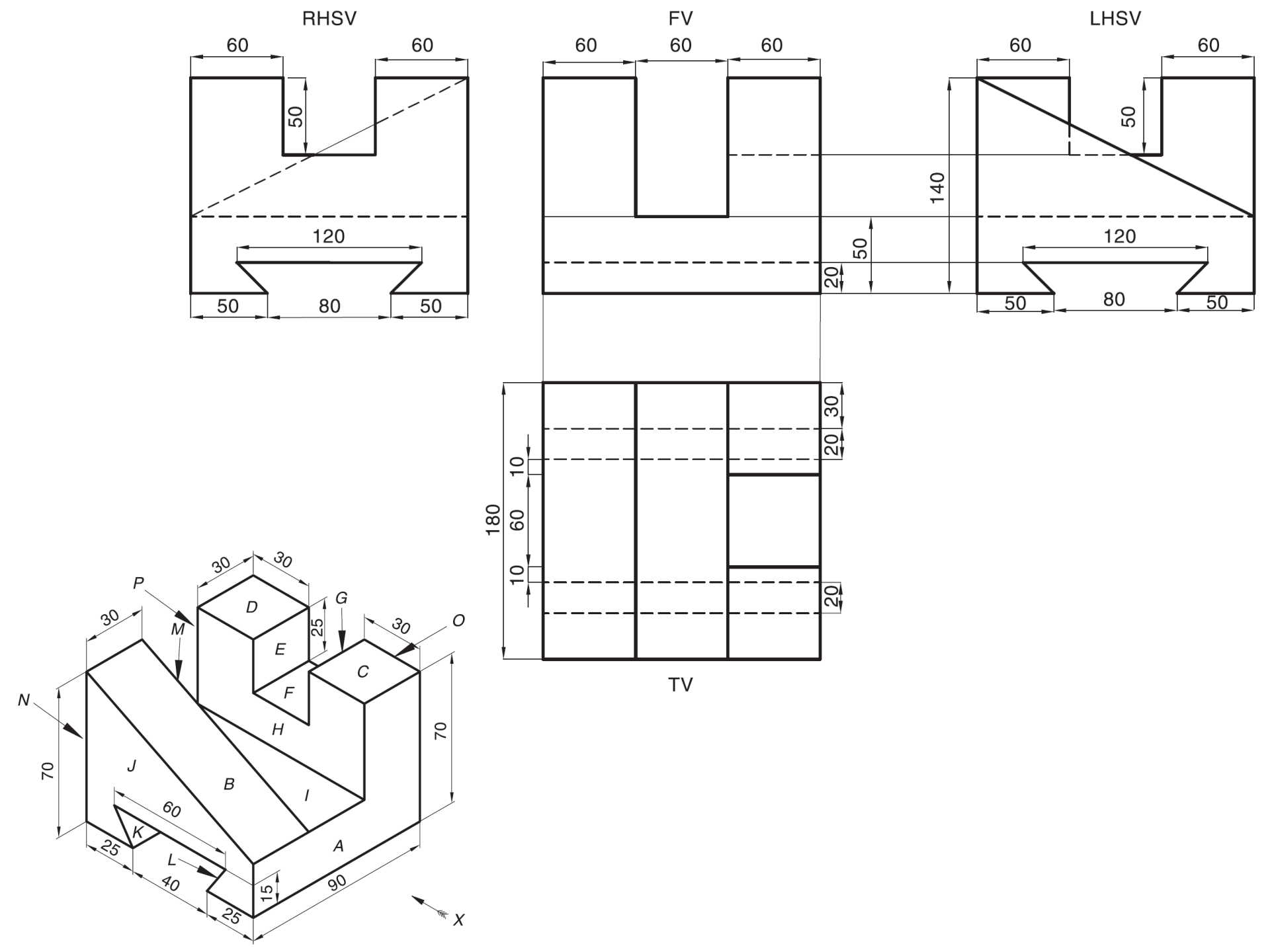
RHSV
FV
LHSV
TV
60
60
50
120
50
80
50
140
20
30
10
180
60
10
P
M
G
O
N
D
E
F
C
H
J
B
I
K
L
A
X
25
40
15
90
70

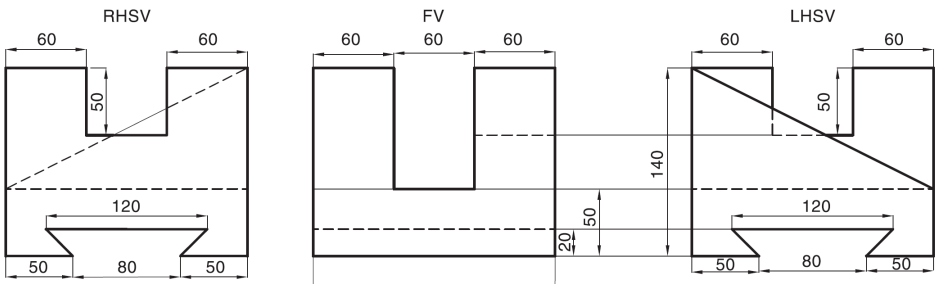
RHSV
FV
LHSV
60
60
60
60
60
60
50
50
140
120
120
50
20
50
80
50
50
80
50

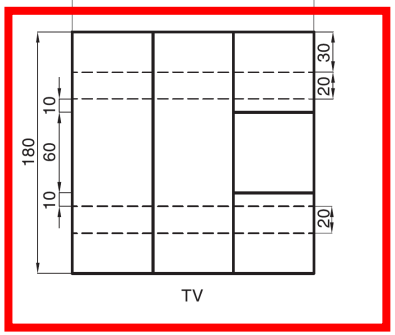
180
10
60
10
30
20
20
TV

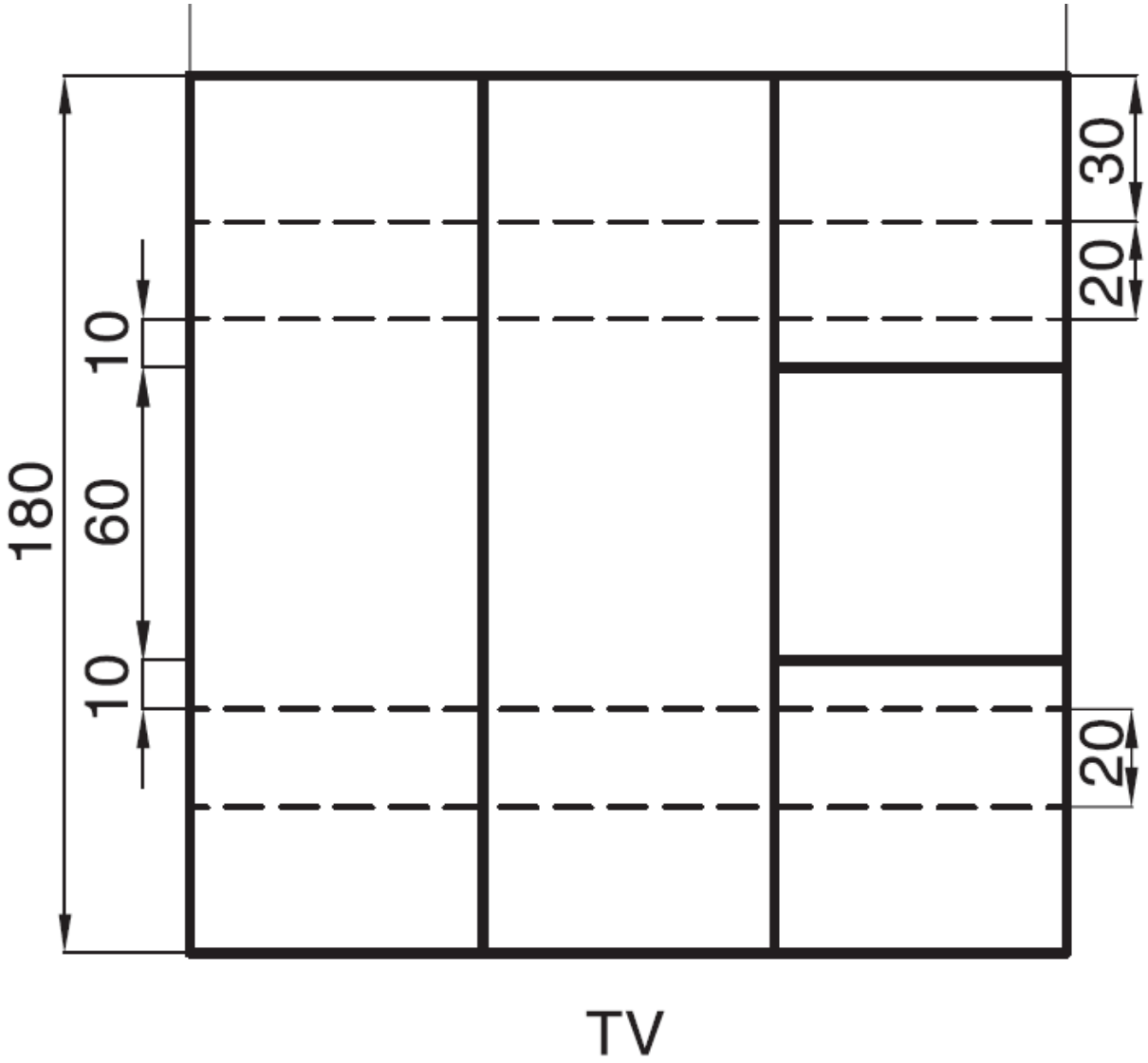
180
10
60
10
30
20
20
TV

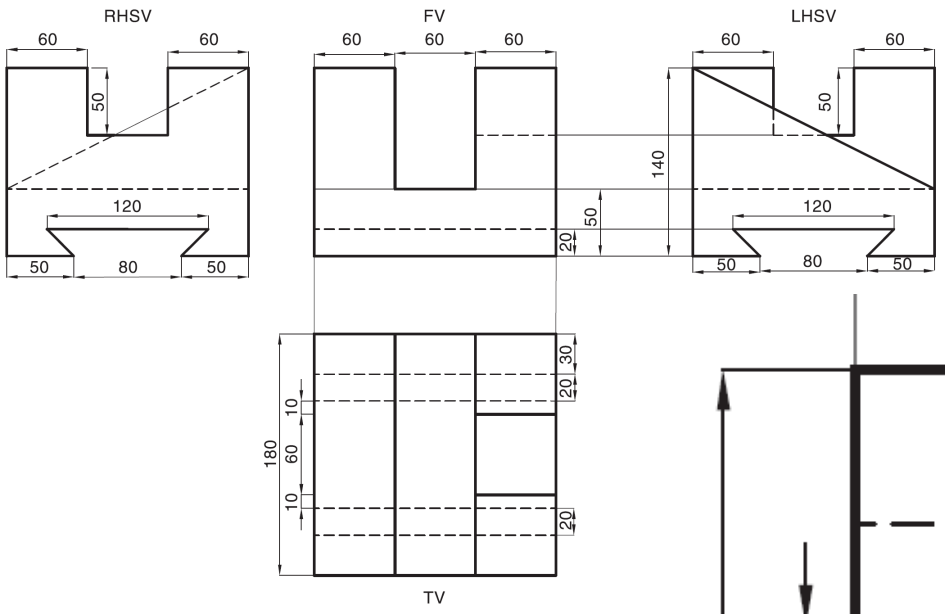
RHSV
FV
LHSV
60
60
50
120
50
80
50
140
20
30
10
60
180
TV

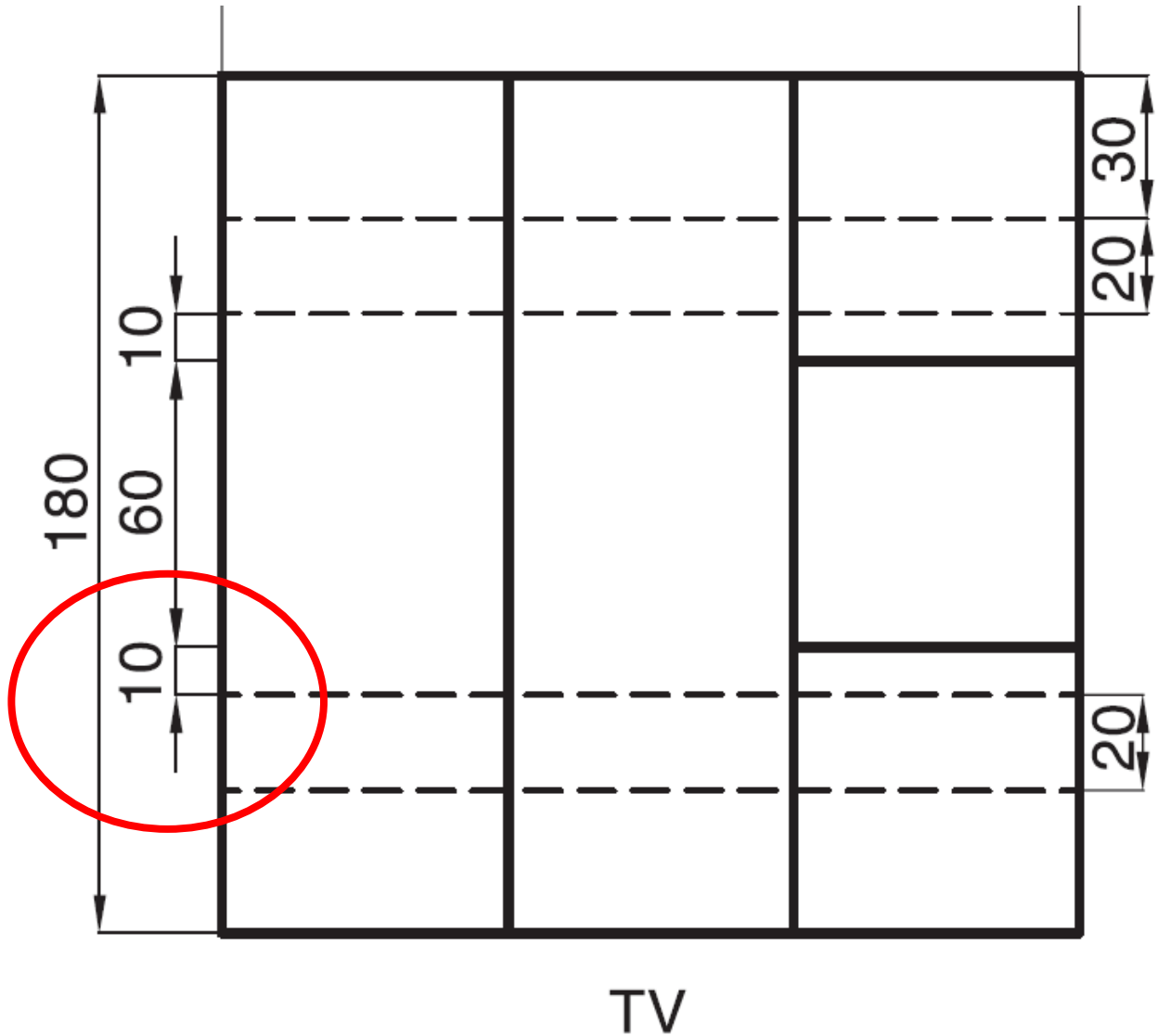
180
10
60
10
30
20
20
TV

Recall dimensioning norms

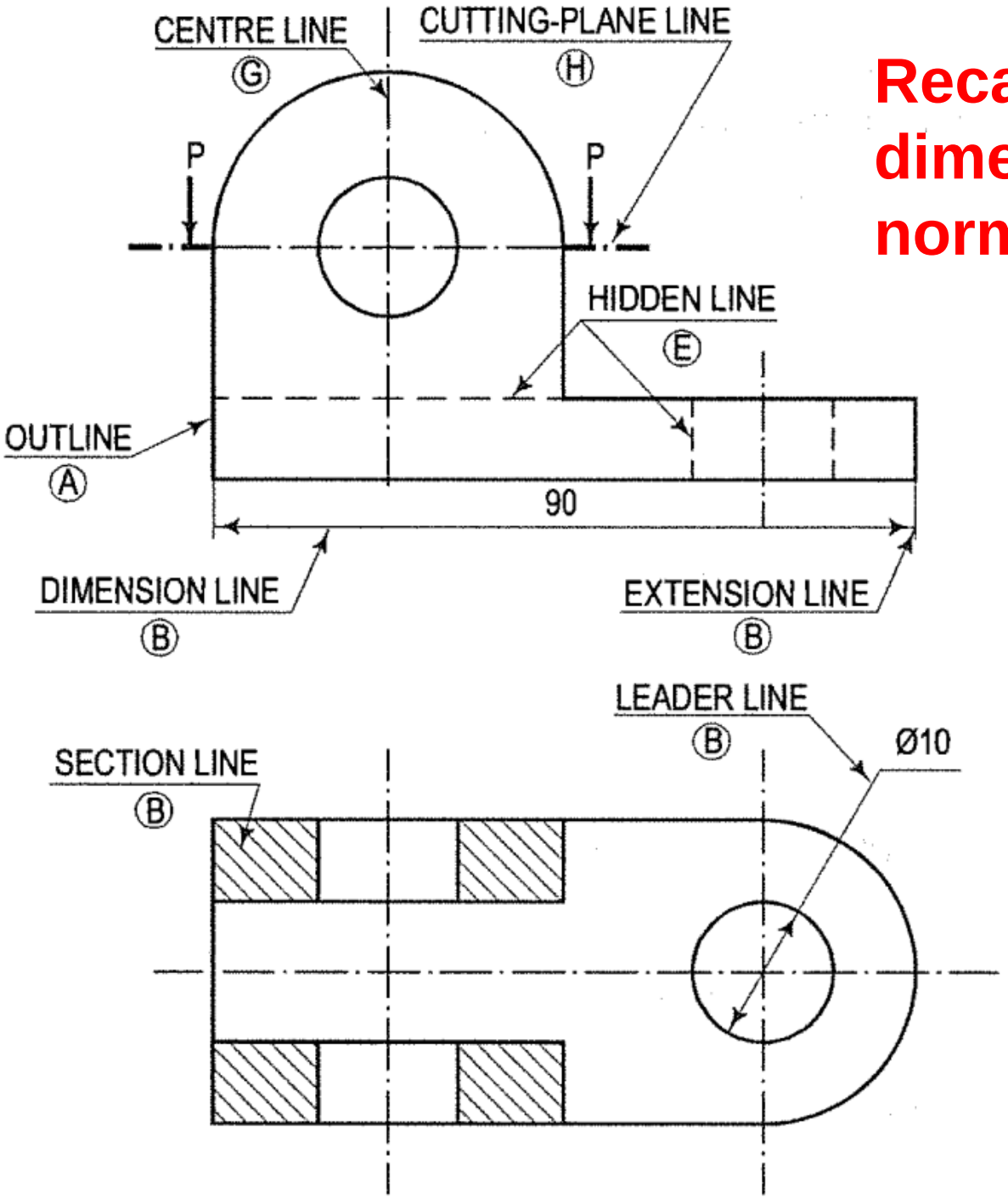

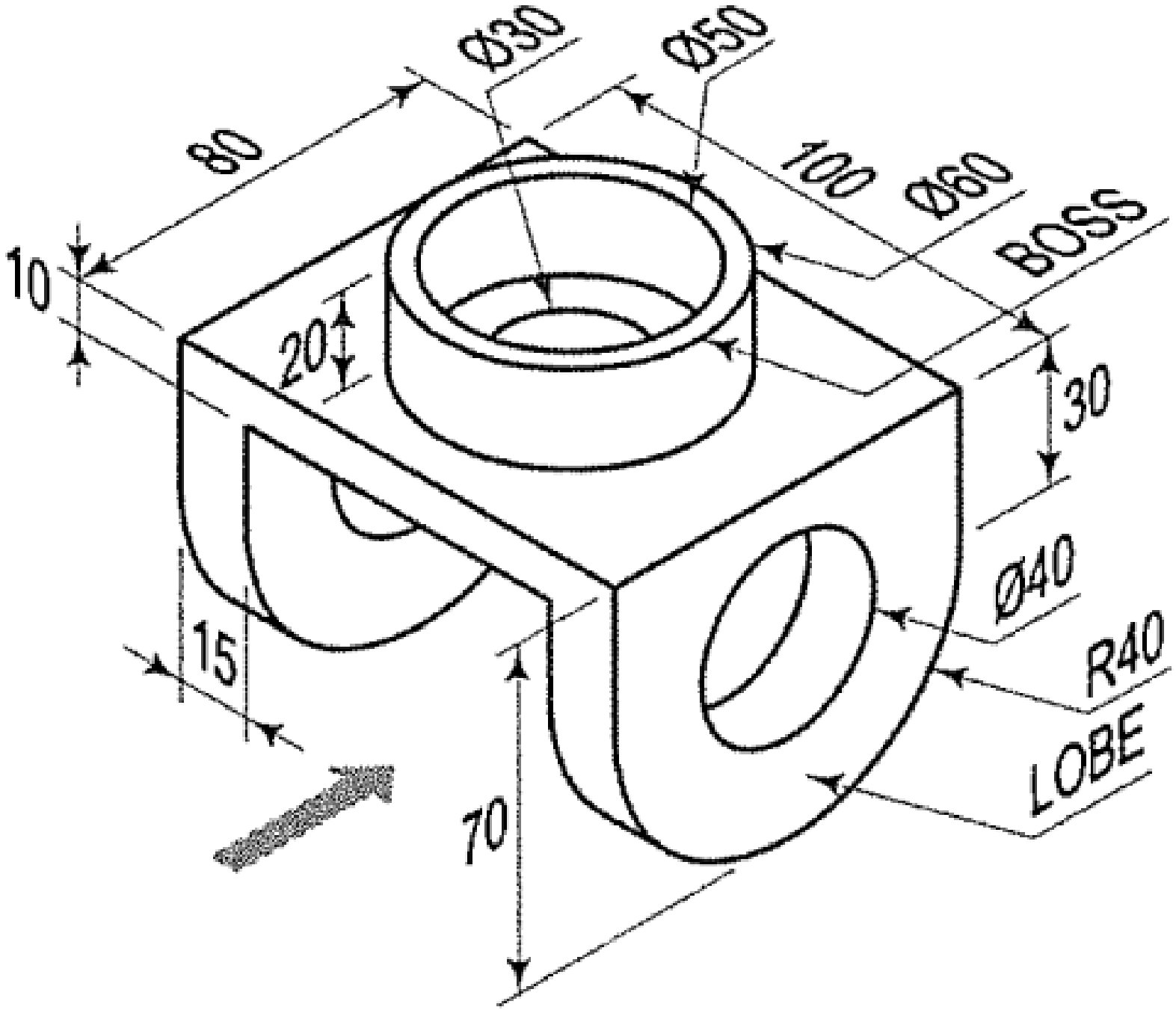
Ø30
Ø50
80
100
Ø60
BOSS
10
20
30
Ø40
15
R40
70
LOBE

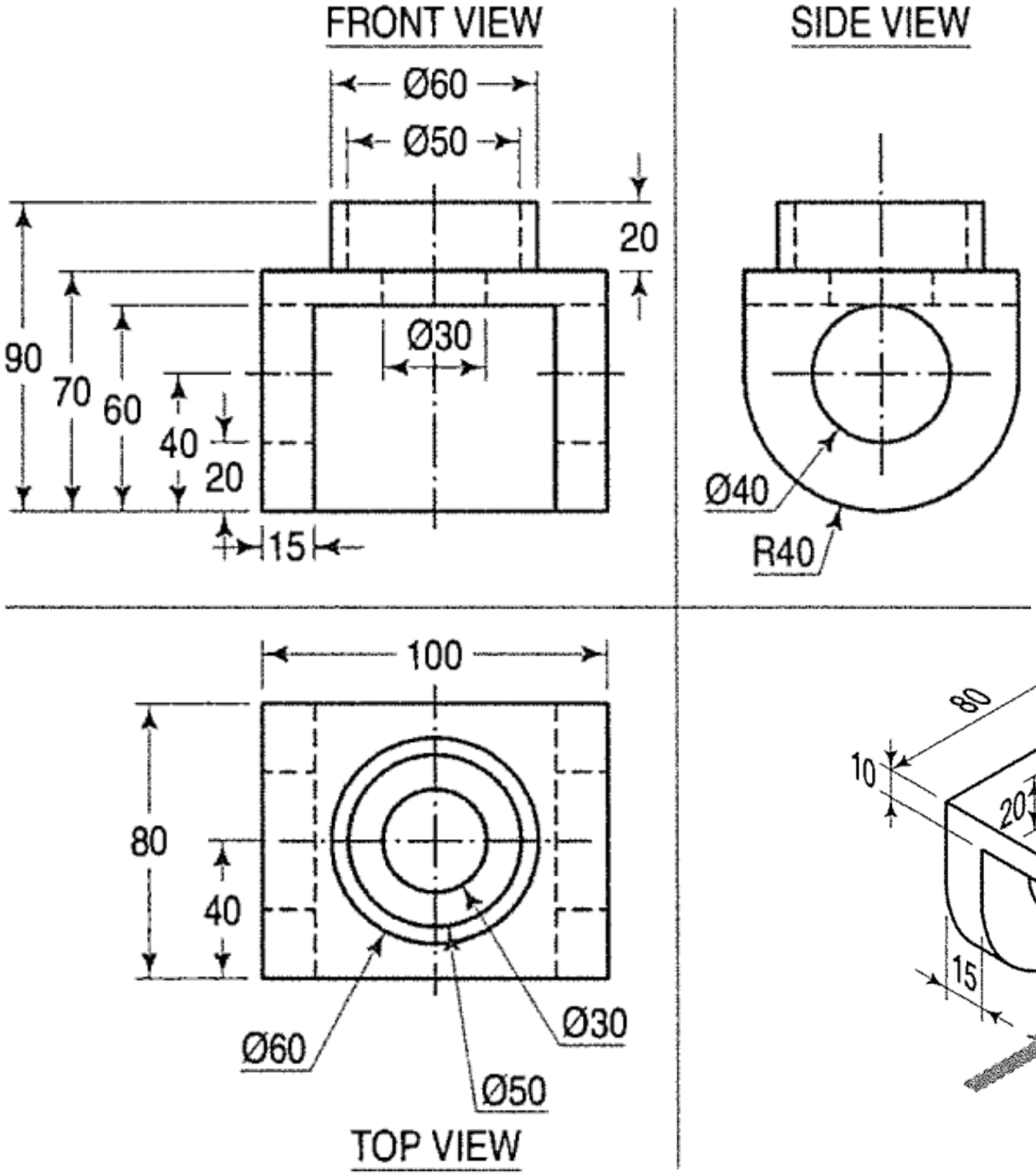

Note the different method of dimensioning

DO NOT USE A MIXTURE OF STYLES WHILE DIMENSIONING