FAIRCHILD SEMICONDUCTOR

F8

MICROPROCESSOR

TABLE OF CONTENTS

Introduction

F8 Device Descriptions

- 3850 Central Processing Unit
- 3851 Program Storage Unit
- 3853 Dynamic Memory Interface
- 3852 Static Memory Interface
- 3854 Direct Memory Access

F8 Application Spectrum

F8 Customer Support

F8 Instruction Set Summary

F8 Power Requirements

F8 Signal Electrical Specifications

©1975 Semiconductor Components Group, Fairchild Camera and Instrument Corporation/464 Ellis Street, Mountain View, California 94042/(415) 962-5011/TWX 910-379-6435

THINK F8 UNIVERSAL STANDARD MICROPROCESSOR

VERSATILE . . EFFICIENT . . COST EFFECTIVE

The ultimate goal, from F8 design concept through development and production, was to produce the most versatile, efficient, cost-effective microprocessor system available today. To accomplish this, five stringent parameters, based on user experience with other systems, were set forth as guidelines for the F8.

- Minimum Parts Count
- Cost Effectiveness
- Simple Peripheral Interfaces
- Easy Expansion through Modular Architecture
- Simplified Programming and Debugging

HOW WERE F8 GOALS MET ?

By . . . *unique system partitioning* the system functions have been divided among the various circuits of the F8 family to provide sophisticated modularity. As a result, it is now possible to build a minimum microprocessor system with only two devices. To this system PSU, RAM and I/O devices can be added to form medium size or memory intensive systems with a minimum use of external parts. And, finally, for solving complex problems, the F8 devices can be connected as subsystems into a synergistic system of independent microprocessors.

By . . . *incorporating the I/O structure on the chips* so that the majority (95%) of the peripheral devices can be directly controlled without the need for special circuits. The trick is to accommodate the characteristics of a given peripheral device in the software. The I/O hardware structure includes a programmable timer, an efficient interrupt system and bidirectional I/O ports.

By . . . providing *carefully thought out software* for generating and debugging microprograms and a choice of three hardware modules for speeding up prototype development.

WHAT IS THE RESULT ?

. . . *a complete family of LSI circuits* that can be used as building blocks to construct versatile, efficient, cost effective systems from the most simple to the highly complex.

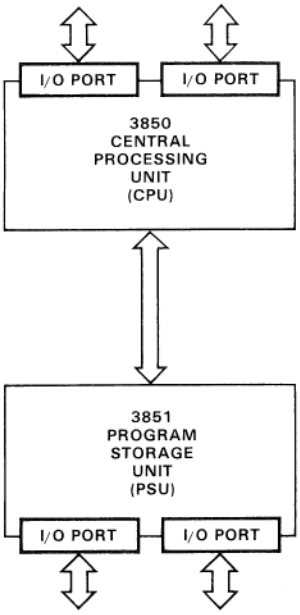

MINIMUM SYSTEM

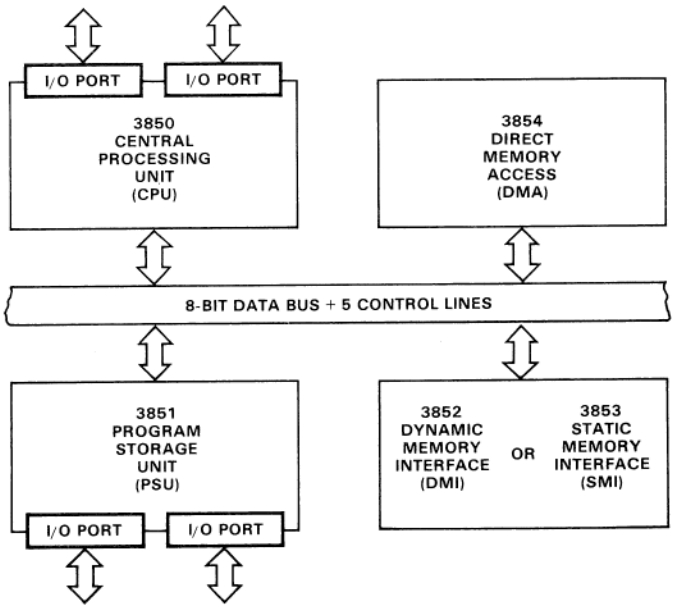

F8 DEVICE FAMILY

3850 CENTRAL PROCESSING UNIT

Fairchild's F8 Central Processing Unit (CPU) contains all of the functions of an ordinary central processor and adds some time and money saving features uniquely its own. For instance, the 64 bytes of scratchpad RAM memory already included on the F8 CPU eliminate the need for external RAM circuits in many applications. Clock and power-on-reset circuitry, normally requiring additional integrated circuit packages, are included on-chip. Fairchild's CPU also contains 16 bits of fully bidirectional input and output lines internally latched (for storing output data) and capable of driving a standard TTL load.

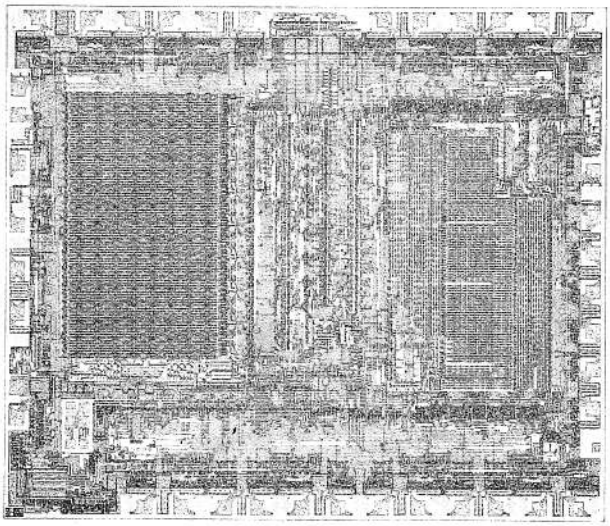

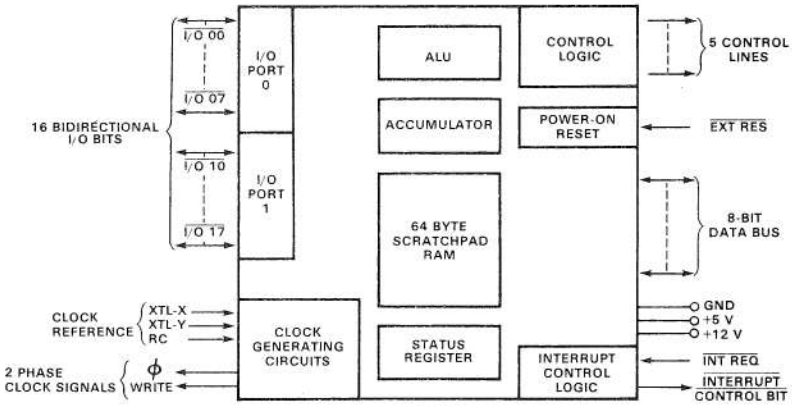

3850
CPU BLOCK DIAGRAM

3851 PROGRAM STORAGE UNIT

It is important to note that Fairchild's Program Storage Unit (PSU) is not just a conventional Read Only Memory. In addition to containing 1024 bytes of mask programmable ROM for program and constant storage, the F8 PSU includes the addressing logic for memory referencing, a Program Counter, an Indirect Address Register (the Data Counter) and a Stack Register. A complete vectored interrupt level, including an external interrupt line to alert the central processor, is provided. All of the logic necessary to request, acknowledge and reset the interrupt is on the F8 PSU. The 8-bit Programmable Timer is especially useful for generating real time delays. The PSU has an additional 16 bits of TTL compatible, bidirectional, fully latched I/O lines.

Systems requiring more program storage may be expanded by adding more PSU circuits. For example, one F8 CPU and three F8 PSUs will produce a microprocessor system complete with 64 bytes of RAM, 3072 bytes of ROM, 64 I/O bits, three interrupt levels, and three programmable timers. This complete system will require only four IC packages.

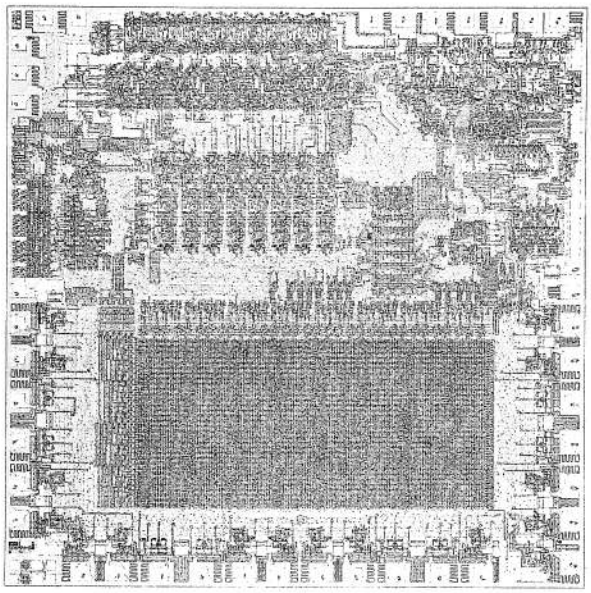

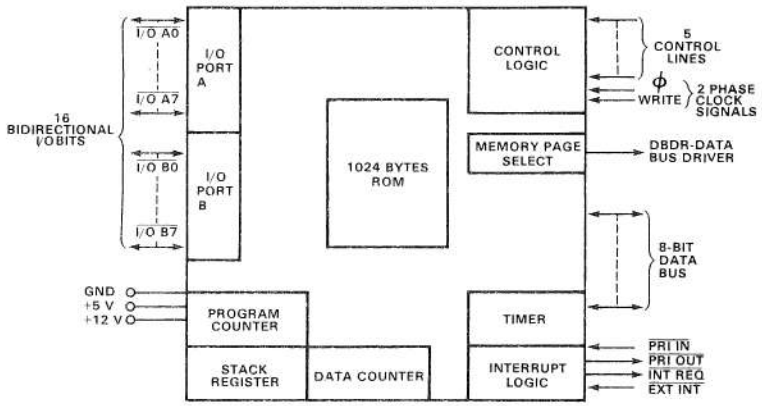

3851
PSU BLOCK DIAGRAM

3852/3853 MEMORY INTERFACE

For applications requiring more than the 64 byte RAM located on the CPU, two memory interface circuits are included in the F8 set. Each device generates the 16 address lines and the signals necessary to interface with up to 65K bytes of RAM, PROM or ROM memory. Either device may be used in conjunction with standard static semiconductor memory devices.

The Static Memory Interface (SMI) contains a full level of interrupt capability and a programmable timer. The Dynamic Memory Interface (DMI) contains all of the logic necessary to refresh MOS dynamic memories without degrading the system throughput time. The F8 DMI can also interface with static memories when desired.

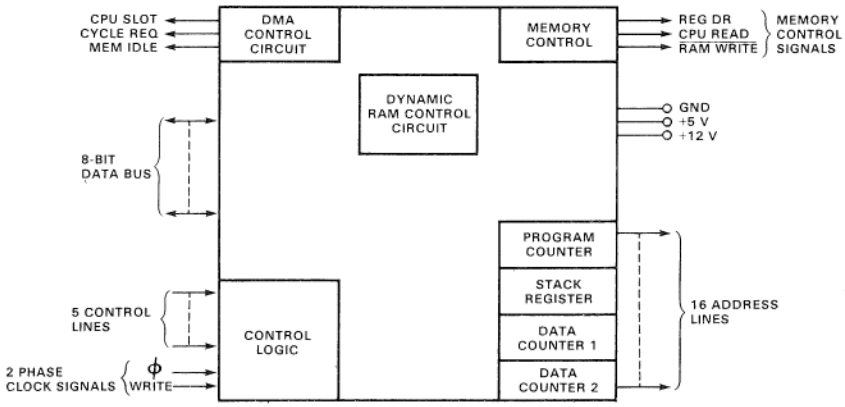

3852
DMI BLOCK DIAGRAM

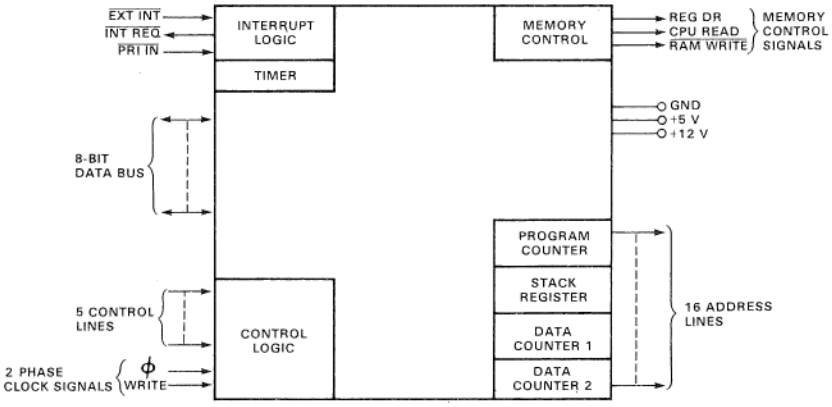

3853
SMI BLOCK DIAGRAM

3854 DIRECT MEMORY ACCESS

Fairchild's Direct Memory Access (DMA) device sets up a high speed data path to link F8 memory with peripheral electronics. The F8 DMA circuit, when working in conjunction with the F8 DMI, does not require overhead electronics to keep track of memory addresses, bytes transferred and handshaking signals. The data transfer is initiated by the CPU under program control. Once started, the DMA transfer will continue without CPU intervention. The CPU can sense the enable line of the DMA to determine the completion of a transfer. The entire DMA transfer will take place without halting the central processor.

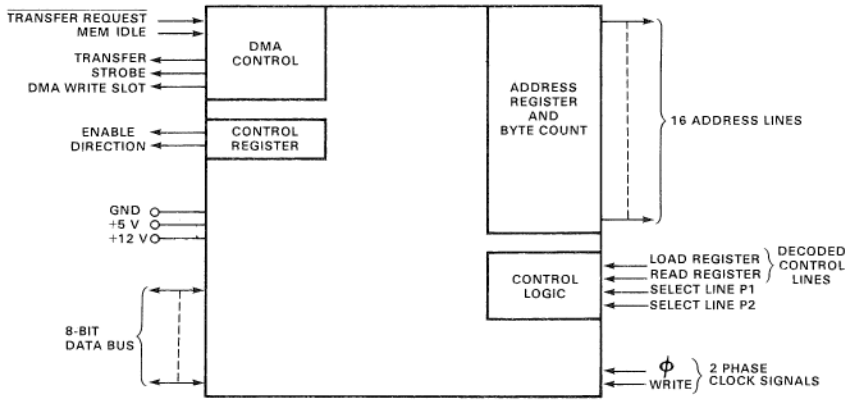

3854
DMA BLOCK DIAGRAM

F8 MICROPROCESSOR APPLICATION SPECTRUM

Because of its unique system partitioning, the F8 device set can be applied across a wide range of applications. The minimum two-circuit system is the basis for a modular architecture that can handle increasingly complex problems. A system of medium complexity can be designed by adding more F8 PSUs. The use of an F8 memory interface device allows up to 65K bytes of standard memories to be incorporated into the F8 system. For highly complex applications, independent F8 subsystems can be connected into a multiprocessing system in which each subsystem can operate independently yet can be controlled by one CPU that is the coordinator.

CUSTOM

COST SENSITIVE

PERFORMANCE SENSITIVE

MINICOMPUTER OR BIT-SLICE STRUCTURE

AUTOMOTIVE IGNITION CONTROL
AUTOMOTIVE BRAKES
AUTOMOTIVE DASH CONTROL
HOME APPLIANCES
VENDING MACHINES
ELECTRONIC SCALES
SPECIALTY CALCULATORS
ELECTRONIC GAMES
AUTOMATED GAS PUMPS
FAST FOOD CASH REGISTERS
PAPER TAPE HANDLERS
CASSETTE TAPE HANDLERS
CASH REGISTERS
COMMUNICATION LINE CONTROLLERS
PRINTER CONTROLLERS
TRAFFIC LIGHT CONTROLLERS
COPIERS
PABX
FILM PROCESSING
AUTOMOTIVE ANALYZERS
FLOPPY DISK CONTROLLERS
MESSAGE CONCENTRATORS
MEDICAL INSTRUMENTS
MACHINE TOOL CONTROL
STORAGE AND FORWARD MESSAGE SWITCHING
ADAPTIVE EQUALIZERS
FAST FOURIER TRANSFORM ANALYZERS

F8

A TWO-CIRCUIT SYSTEM

The two-circuit F8 microprocessor is suitable for small data terminals, controllers, and specialty calculators. The keyboard is connected directly to the F8 I/O ports without special interfaces. Switch-bounce protection, rollover, and key encoding are all under software control. Software also decodes signals for LED readouts.

As an appliance controller, for example, the two-circuit system can perform all input-output sensing, actuating, timing, and computation operations. A system like the combination washing-machine-and-dryer controller in *Figure 1* requires more than 250 components when other microprocessor device sets are used, but with the F8 devices uses only 55 components, including 28 LEDs and the power semiconductor devices and relays used to control the motors. A set of custom circuits would also require about 50 parts, but initial engineering expense is heavy and severe penalties are incurred if changes are required. With the F8 system changes can be made by merely changing the program.

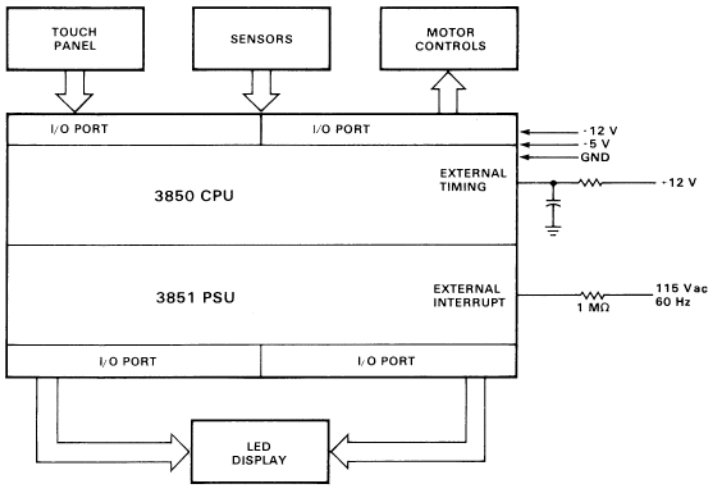

Fig. 1. Two-Circuit System

A MORE COMPLEX SYSTEM

The versatility of the F8 system is indicated by the traffic-light-controls system in *Figure 2*. The use of one CPU and two PSU circuits provides the designer with two timers, two interrupts, an onboard clock, onboard power-on reset, onboard switch decoding, and 48 bidirectional I/O bits. This system could be tied to vehicle detectors in the road, to monitor traffic for left-turn lanes as well as through-traffic flow in four directions. It would also react to interrupts from the pedestrian control buttons at each corner. There also is sufficient I/O capability to permit communication with and control of neighboring intersections and to allow the system to be operated manually or tested for proper operation.

Five F8 features are of particular interest for this type of application. One of the interrupts can eliminate the need for such external circuits as a comparator to compare a count of the cars with a predetermined value to cause the light to change. (The CPU can handle the simple arithmetic of counting cars.) This interrupt also eliminates the need for continuous polling of traffic count by the microcomputer. The second interrupt would be ideal for permitting pedestrian control to override the automatic system. The internal clock, with an external cyrstal, can also control light routines.

The two timers permit simultaneous counting of delay for vehicle signals and flashing warning lights for pedestrians. The onboard power-on reset acts in case of power failure to start the system automatically when power is renewed. The bidirectional I/Os have built-in latches that eliminate the need for external latches for the job of "holding" commands for lights as well as the momentary commands provided by timers and sensors.

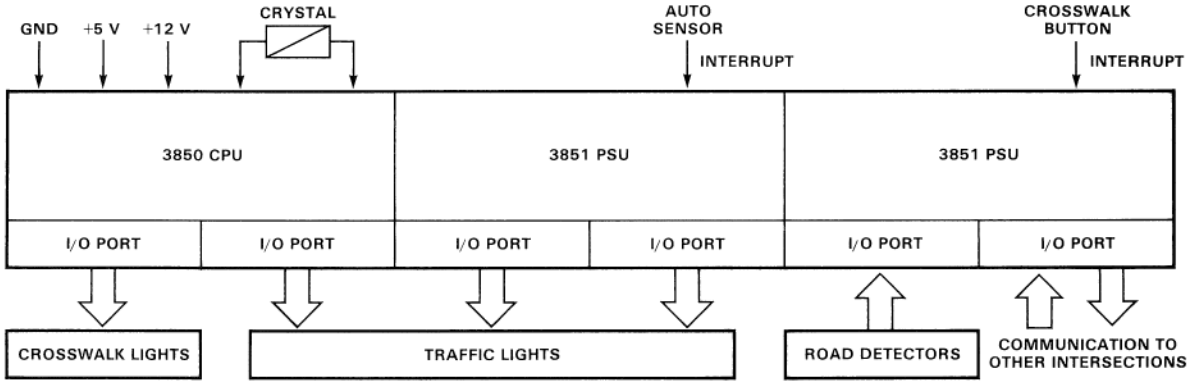

Fig. 2. Medium Complexity System

A MEMORY INTENSIVE SYSTEM

A typical application is a printing credit-verification terminal *(Figure 3)*. Such a system requires high performance and yet must be low in cost if it is to reach a large market. Only four different F8 devices are required to handle a keyboard input, visual display, card reader, and printer as well as provide a modem interface and memory interface for external RAM storage. This printing credit-verification system might be compared to a "bare mini-computer" in terms of utility, however, a detailed engineering evaluation would show that it costs less, has fewer parts and a more flexible I/O structure.

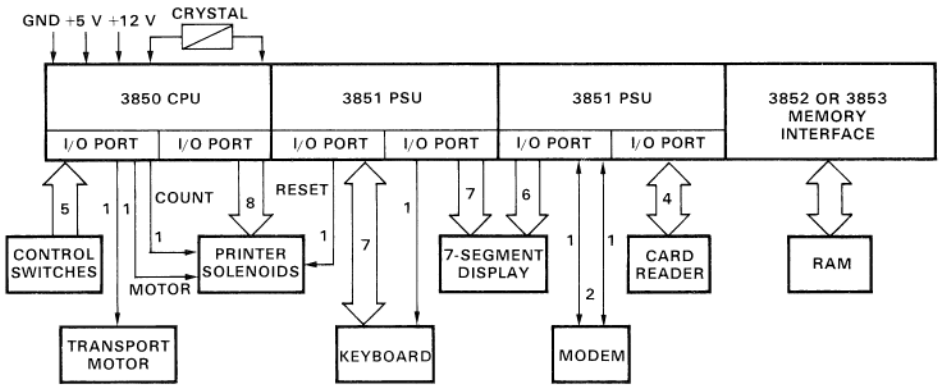

Fig. 3. Memory Intensive System

MULTI-MICROPROCESSOR SYSTEM

Figure 4 shows a specific application of the multi-processing concept as applied to a keyboard-to-floppy-disk system. Possibly this is the most cost-effective way of implementing this system, conservatively costing less than 50% of a conventional implementation. This system involves concurrent operation of three floppy disks, magnetic tape, CRT, keyboard, printer, and modem. While the low-speed devices (the keyboard, printer, and modem) can be adequately handled by the programmed I/O structure, the high-speed devices (disks, magnetic tape, and CRT) require separate F8 CPUs and PSUs.

This scheme provides simplicity of control, modularity, and freedom to expand. In this case, the units operating concurrently are: one magnetic-tape unit (25 μs/byte); three floppy-disk units (32 μs/byte each); and a CRT unit (71 μs/byte). This combination requires an aggregate bandwidth of 0.1478 byte/μs. This is well within the F8's upper bandwidth limit of 0.5 byte/μs.

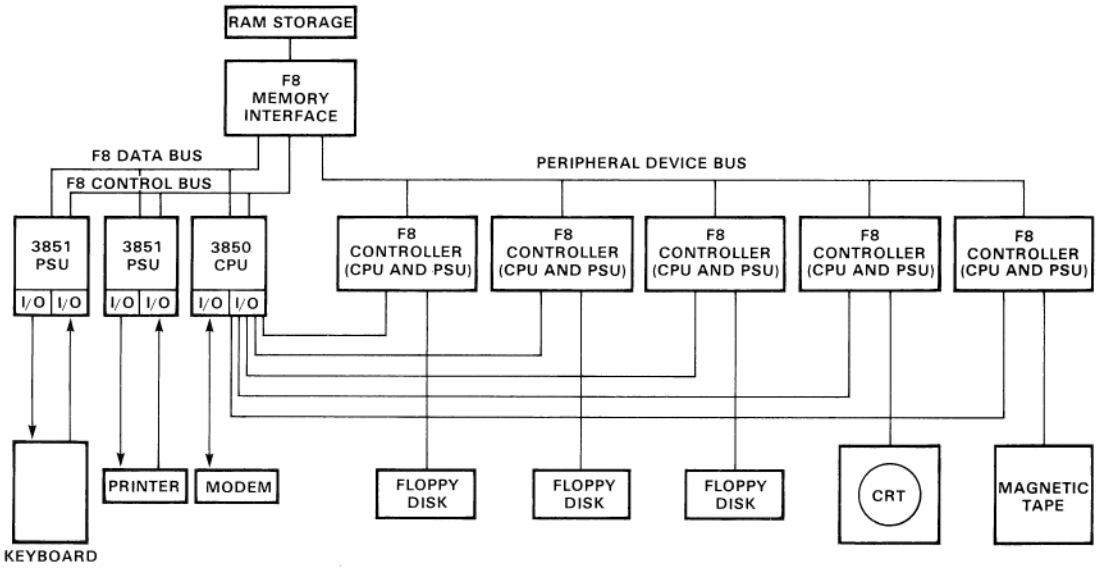

Fig. 4. Multi Microprocessor System

F8 CUSTOMER SUPPORT

Fairchild's F8 system is supported by extensive hardware and software aids. F8 devices, standard RAMs, ROMs and PROMs are available now.

F8 DEVELOPMENT HARDWARE

- F8M Development Module
  The F8M offers a basic development system for microprocessor projects.
- F8S Development Module*
  This unit provides expanded capability for memory-intensive applications.
- F8C Microcomputer*
  The F8C is a complete microcomputer system including power supplies and control panel. I/O ports are brought out to connectors. The F8C is provided with a Native Assembler, Debug Package and Source Editor.

F8 SOFTWARE

- Cross Assembler (FORTRAN IV)
  Accessible now on the G.E. and NCSS Timeshare Networks. Additional networks available as required.

*Available soon.

- Cross Simulator (FORTRAN IV)
  Accessible now on the same basis as Cross Assembler.

F8 DOCUMENTATION

- Microprocessor User's Manual
  The User's Manual provides device specifications, the instruction set in detail, and descriptions of the Cross Assembler and Simulator.
- Microprocessor Application Manual
  The Applications Manual provides initial details concerning bit manipulation, RAM expansion, extension of I/O ports, subroutines and boot strap loaders.

F8 FIELD SUPPORT

- Training
  A complete, hands-on, in-depth workshop to enable F8 users and potential users to design both hardware and software using the F8 microprocessor.
- Field Application Engineers
  Fairchild's knowledgeable FAEs will provide on-the-spot assistance with any F8 system application.

F8 INSTRUCTION SET SUMMARY

The F8 instruction set contains over 60 different instructions which may be subdivided into 10 categories: Accumulator, Scratchpad Register, Indirect Scratchpad Address Register, Memory Reference, Data Counter, Status Register, Program Counter, Branch, Interrupt Control and Input/Output instructions. Because 55% of the F8 instructions are only one byte long, programs are short and memory requirements significantly reduced. An alphabetic listing of the instructions is shown below. The following pages contain a complete description of the F8 instructions, including the cycle time. Each cycle is 2 μs for a system with a 2 MHz clock frequency.

F8 ADDRESSING MODES

The F8 instruction set has eight modes of referencing either I/O, CPU registers or bulk memory.

Implied Addressing – The data for this one-byte instruction is implied by the actual instruction. For example, the POP instruction automatically implies that the content of the Program Counter will be set to the value contained in the Stack Register.

Direct Addressing – In these two-byte instructions, the address of the operand is contained in the second byte of the instruction. The Direct Addressing mode is used in the Input/Output class of instructions.

Short Immediate Addressing – Instructions whose addressing mode is Short Immediate have the instruction op code as the first four bits and the operand as the last four bits. They are all one-byte instructions.

Long Immediate Addressing – In these two-byte instructions, the first instruction byte is the op code and the second byte is the 8-bit operand.

Direct Register Addressing – This mode of addressing may be used to directly reference the Scratchpad Registers. By including the register number in the one-byte instruction, 12 of the 64 Scratchpad Registers may be referenced directly.

Indirect Register Addressing – All 64 Scratchpad Registers may be indirectly referenced, using the Indirect Scratchpad Register in the CPU. This 6-bit register, which acts as a pointer to the scratchpad memory, may either be incremented, decremented, or left unchanged while accessing the scratchpad register.

Indirect Memory Addressing – A 16-bit Indirect Address Register, the Data Counter, points to either data or constants in bulk memory. A group of one-byte instructions is provided to manipulate this area of memory. These instructions imply that the Data Counter is pointing to the desired memory byte. The Data Counter is self-incrementing, allowing for an entire data field to be scanned and manipulated without requiring special instructions to increment its content. The memory interface circuit contains two interchangeable data counters.

Relative Addressing – All F8 Branch Instructions use the relative addressing mode. Whenever a branch is taken, the Program Counter is updated by an 8-bit relative address contained in the second byte of the instruction. A branch may extend 128 locations forward or 127 locations back.

ALPHABETIC LIST OF INSTRUCTIONS

ADC	Add Data Counter with Accumulator
AI	Add Immediate with Accumulator
AM	Add Binary Accumulator with Memory
AMD	Add Decimal Accumulator with Memory
AS	Add Binary Accumulator with Scratchpad Register
ASD	Add Decimal Accumulator with Scratchpad Register
BC	Branch on Carry
BF	Branch on False Condition
BM	Branch if Negative
BNC	Branch if no Carry
BNO	Branch if no Overflow
BNZ	Branch if no Zero
BP	Branch if Positive
BR	Absolute Branch
BR7	Branch if ISAR is not 7
BT	Branch on True Condition
BZ	Branch on Zero Condition
CI	Compare Immediate
CLR	Clear Accumulator
CM	Compare with Memory
COM	Complement Accumulator
DCI	Load Data Counter Immediate
DI	Disable Interrupt
DS	Decrement Scratchpad Register
EI	Enable Interrupt
INC	Increment Accumulator
IN	Input
INS	Input Short
JMP	Jump
LI	Load Accumulator Immediate
LIS	Load Accumulator Short
LISL	Load ISAR – Lower 3 Bits
LISU	Load ISAR – Upper 3 Bits
LM	Load Memory
LNK	Link Carry into Accumulator
LR	Load Register (5 Types)
	Scratchpad
	Program Counter
	ISAR
	Status
	Data Counter
NI	Logical AND Accumulator Immediate
NM	Logical AND Memory Accumulator
NOP	No Operation
NS	Logical AND Scratchpad and Accumulator
OI	Logical OR Immediate
OM	Logical OR Memory with Accumulator
OUT	Output
OUTS	Output Short
PI	Push Program Counter into Stack Register Set Program Counter to New Location
PK	Push Program Counter into Stack Register Set Program Counter from Scratchpad
POP	Put Stack Register into Program Counter
SL	Shift Left
SR	Shift Right
XDC	Exchange Data Counters
XI	Exclusive OR Immediate
XM	Exclusive OR Accumulator with Memory
XS	Exclusive OR Accumulator with Scratchpad

ACCUMULATOR GROUP INSTRUCTIONS

OPERATION	MNEMONIC OP CODE	OPERAND	FUNCTION	MACHINE CODE	BYTES	CYCLES	STATUS BITS OVF	ZERO	CRY	SIGN
ADD CARRY	LNK		ACC←(ACC) + CRY	19	1	1	1/0	1/0	1/0	1/0
ADD IMMEDIATE	AI	ii	ACC←(ACC) + H'ii'	24ii	2	2.5	1/0	1/0	1/0	1/0
AND IMMEDIATE	NI	ii	ACC←(ACC) ∧ H'ii'	21ii	2	2.5	0	1/0	0	1/0
CLEAR	CLR		ACC←H'00'	70	1	1	–	–	–	–
COMPARE IMMEDIATE	CI	ii	H'ii' + $(\overline{ACC})$ + 1	25ii	2	2.5	1/0	1/0	1/0	1/0
COMPLEMENT	COM		ACC←(ACC) ⊕ H'FF'	18	1	1	0	1/0	0	1/0
EXCLUSIVE-OR IMMEDIATE	XI	ii	ACC←(ACC) ⊕ H'ii'	23ii	2	2.5	0	1/0	0	1/0
INCREMENT	INC		ACC←(ACC) + 1	1F	1	1	1/0	1/0	1/0	1/0
LOAD IMMEDIATE	LI	ii	ACC←H'ii'	20ii	2	2.5	–	–	–	–
LOAD IMMEDIATE SHORT	LIS	i	ACC←H'0i'	7i	1	1	–	–	–	–
OR IMMEDIATE	OI	ii	ACC←(ACC) ∨ H'ii'	22ii	2	2.5	0	1/0	0	1/0
SHIFT LEFT ONE	SL	1	SHIFT LEFT 1	13	1	1	0	1/0	0	1/0
SHIFT LEFT FOUR	SL	4	SHIFT LEFT 4	15	1	1	0	1/0	0	1/0
SHIFT RIGHT ONE	SR	1	SHIFT RIGHT 1	12	1	1	0	1/0	0	1
SHIFT RIGHT FOUR	SR	4	SHIFT RIGHT 4	14	1	1	0	1/0	0	1

BRANCH INSTRUCTIONS

In all conditional branches PC_0←(PC_0) + 2 if the test condition is not met. Execution is complete in 3.0 cycles.

OPERATION	MNEMONIC OP CODE	OPERAND	FUNCTION	MACHINE CODE	BYTES	CYCLES	STATUS BITS OVF	ZERO	CRY	SIGN
BRANCH ON CARRY	BC	aa	PC_0←[(PC_0) + 1] + H'aa' if CRY = 1	82aa	2	3.5	–	–	–	–
BRANCH ON POSITIVE	BP	aa	PC_0←[(PC_0) + 1] + H'aa' if SIGN = 1	81aa	2	3.5	–	–	–	–
BRANCH ON ZERO	BZ	aa	PC_0←[(PC_0) + 1] + H'aa' if ZERO = 1	84aa	2	3.5	–	–	–	–
BRANCH ON TRUE	BT	taa	PC_0←[(PC_0) + 1] + H'aa' if any test is true	8taa	2	3.5	–	–	–	–
			t = TEST CONDITION							
			2^2 ZERO, 2^1 CRY, 2^0 SIGN							
BRANCH IF NEGATIVE	BM	aa	PC_0←[(PC_0) + 1] + H'aa' if SIGN = 0	91aa	2	3.5	–	–	–	–
BRANCH IF NO CARRY	BNC	aa	PC_0←[(PC_0) + 1] + H'aa' if CARRY = 0	92aa	2	3.5	–	–	–	–
BRANCH IF NO OVERFLOW	BNO	aa	PC_0←[(PC_0) + 1] + H'aa' if OVF = 0	98aa	2	3.5	–	–	–	–
BRANCH IF NOT ZERO	BNZ	aa	PC_0←[(PC_0) + 1] + H'aa' if ZERO = 0	94aa	2	3.5	–	–	–	–
BRANCH IF FALSE TEST	BF	taa	PC_0←[(PC_0) + 1] + H'aa' if all false test bits	9taa	2	3.5	–	–	–	–
			t = TEST CONDITION							
			2^3 OVF, 2^2 ZERO, 2^1 CRY, 2^0 SIGN							
BRANCH IF ISAR (LOWER) ≠ 7	BR7	aa	PC_0←[(PC_0) + 1] + H'aa' if ISARL ≠ 7 PC_0←(PC_0) + 2 if ISARL = 7	8Faa	2	2.5 2.0	– –	– –	– –	– –
BRANCH RELATIVE	BR	aa	PC_0←[(PC_0) + 1] + H'aa'	90aa	2	3.5	–	–	–	–
JUMP*	JMP	aaaa	PC_0←H'aaaa'	29aaaa	3	5.5	–	–	–	–

*Privileged instruction

MEMORY REFERENCE INSTRUCTIONS

In all Memory Reference Instructions, the Data Counter is incremented DC←DC + 1.

OPERATION	MNEMONIC OP CODE	OPERAND	FUNCTION	MACHINE CODE	BYTES	CYCLES	STATUS BITS OVF	ZERO	CRY	SIGN
ADD BINARY	AM		ACC←(ACC)+[(DC)]	88	1	2.5	1/0	1/0	1/0	1/0
ADD DECIMAL	AMD		ACC←(ACC) +[(DC)]	89	1	2.5	1/0	1/0	1/0	1/0
AND	NM		ACC←(ACC)∧[(DC)]	8A	1	2.5	0	1/0	0	1/0
COMPARE	CM		[(DC)]+ $(\overline{ACC})$ + 1	8D	1	2.5	1/0	1/0	1/0	1/0
EXCLUSIVE OR	XM		ACC←(ACC) ⊕ [(DC)]	8C	1	2.5	0	1/0	0	1/0
LOAD	LM		ACC←[(DC)]	16	1	2.5	–	–	–	–
LOGICAL OR	OM		ACC←(ACC)∨[(DC)]	8B	1	2.5	0	1/0	0	1/0
STORE	ST		(DC)←(ACC)	17	1	2.5	–	–	–	–

ADDRESS REGISTER GROUP INSTRUCTIONS

OPERATION	MNEMONIC OP CODE	OPERAND	FUNCTION	MACHINE CODE	BYTES	CYCLES	STATUS BITS OVF	ZERO	CRY	SIGN
ADD to DATA COUNTER	ADC		DC←(DC) + (ACC)	8E	1	2.5	–	–	–	–
CALL to SUBROUTINE*	PK		PC_0U←(r12); PC_0L←(r13); PC_1←(PC_0)	OC	1	4	–	–	–	–
CALL to SUBROUTINE IMMEDIATE*	PI	aaaa	PC_1←(PC_0); PC_0←H'aaaa	28aaaa	3	6.5	–	–	–	–
EXCHANGE DC	XDC		$DC_0 \rightleftarrows DC_1$	2C	1	2	–	–	–	–
LOAD DATA COUNTER	LR	DC,Q	DCU←(r14); DCL←(r15)	0F	1	4	–	–	–	–
LOAD DATA COUNTER	LR	DC,H	DCU←(r10); DCL←(r11)	10	1	4	–	–	–	–
LOAD DC IMMEDIATE	DCI	aaaa	DC←H'aaaa'	2Aaaaa	3	6	–	–	–	–
LOAD PROGRAM COUNTER	LR	PO,Q	PC_0U←(r14); PC_0L←(r15)	OD	1	4	–	–	–	–
LOAD STACK REGISTER	LR	P,K	PC_1U←(r12); PC_1L←(r13)	09	1	4	–	–	–	–
RETURN FROM SUBROUTINE*	POP		PC_0←(PC_1)	1C	1	2	–	–	–	–
STORE DATA COUNTER	LR	Q,DC	r14←(DCU); r15←(DCL)	OE	1	4	–	–	–	–
STORE DATA COUNTER	LR	H,DC	r10←(DCU); r11←(DCL)	11	1	4	–	–	–	–
STORE STACK REGISTER	LR	K,P	r12←(PC_1U); r13←(PC_1L)	08	1	4	–	–	–	–

SCRATCHPAD REGISTER INSTRUCTIONS

(Refer to Scratchpad Addressing Modes)

OPERATION	MNEMONIC OP CODE	OPERAND	FUNCTION	MACHINE CODE	BYTES	CYCLES	STATUS BITS OVF	ZERO	CRY	SIGN
ADD BINARY	AS	r	ACC←(ACC) + (r)	Cr	1	1	1/0	1/0	1/0	1/0
ADD DECIMAL	ASD	r	ACC←(ACC) + (r)	Dr	1	2	1/0	1/0	1/0	1/0
DECREMENT	DS	r	r←(r) + H'FF'	3r	1	1.5	1/0	1/0	1/0	1/0
LOAD	LR	A,r	ACC←(r)	4r	1	1	–	–	–	–
LOAD	LR	A,KU	ACC←(r12)	00	1	1	–	–	–	–
LOAD	LR	A,KL	ACC←(r13)	01	1	1	–	–	–	–
LOAD	LR	A,QU	ACC←(r14)	02	1	1	–	–	–	–
LOAD	LR	A,QL	ACC←(r15)	03	1	1	–	–	–	–
LOAD	LR	r,A	r←(ACC)	5r	1	1	–	–	–	–
LOAD	LR	KU,A	r12←(ACC)	04	1	1	–	–	–	–
LOAD	LR	KL,A	r13←(ACC)	05	1	1	–	–	–	–
LOAD	LR	QU,A	r14←(ACC)	06	1	1	–	–	–	–
LOAD	LR	QL,A	r15←(ACC)	07	1	1	–	–	–	–
AND	NS	r	ACC←(ACC) ∧ (r)	Fr	1	1	0	1/0	0	1/0
EXCLUSIVE OR	XS	r	ACC←(ACC) ⊕ (r)	Er	1	1	0	1/0	0	1/0

*Privileged instruction

MISCELLANEOUS INSTRUCTIONS

OPERATION	MNEMONIC OP CODE	OPERAND	FUNCTION	MACHINE CODE	BYTES	CYCLES	STATUS BITS OVF	ZERO	CRY	SIGN
DISABLE INTERRUPT	DI		RESET ICB	1A	1	2	–	–	–	–
ENABLE INTERRUPT*	EI		SET ICB	1B	1	2	–	–	–	–
INPUT	IN	aa	ACC←(INPUT PORT aa)	26aa	2	4	0	1/0	0	1/0
INPUT SHORT	INS	a	ACC←(INPUT PORT a)	Aa	1	4***	0	1/0	0	1/0
LOAD ISAR	LR	IS,A	ISAR←(ACC)	0B	1	1	–	–	–	–
LOAD ISAR LOWER	LISL	a	ISARL←a	1101a**	1	1	–	–	–	–
LOAD ISAR UPPER	LISU	a	ISARU←a	01100a**	1	1	–	–	–	–
LOAD STATUS REGISTER*	LR	W,J	W←(r9)	1D	1	2	1/0	1/0	1/0	1/0
NO-OPERATION	NOP		PC_0←(PC_0) + 1	2B	1	1	–	–	–	–
OUTPUT	OUT	aa	OUTPUT PORT aa←(ACC)	27aa	2	4	–	–	–	–
OUTPUT SHORT	OUTS	a	OUTPUT PORT a←(ACC)	Ba	1	4***	–	–	–	–
STORE ISAR	LR	A,IS	ACC←(ISAR)	0A	1	1	–	–	–	–
STORE STATUS REG	LR	J,W	r9←(W)	1E	1	1	–	–	–	–

*Privileged instruction
**3-bit octal digit
***2 machine cycles for CPU ports

NOTES

Each lower case character represents a Hexadecimal digit
Each cycle equals 4 machine clock periods
Lower case denotes variables specified by programmer

Function Definitions

←	is replaced by
( )	the contents of
(–)	Binary "1"s complement of
+	Arithmetic Add (Binary or Decimal)
⊕	Logical "OR" exclusive
∧	Logical "AND"
∨	Logical "OR" inclusive
H' '	Hexadecimal digit

Register Names

a	Address Variable
A	Accumulator
DC	Data Counter (Indirect Address Register)
DC_0	Data Counter #0 (Indirect Address Register #0)
DC_1	Data Counter #1 (Indirect Address Register #1)
DCL	Least significant 8 bits of Data Counter Addressed
DCU	Most significant 8 bits of Data Counter Addressed
H	Scratchpad Register #10 and #11
i and ii	immediate operand
ICB	Interrupt Control Bit
IS	Indirect Scratchpad Address Register
ISAR	Indirect Scratchpad Address Register
ISARL	Least Significant 3 bits of ISAR
ISARU	Most Significant 3 bits of ISAR
J	Scratchpad Register #9
K	Registers #12 and #13
KL	Register #13
KU	Register #12
PC_0	Program Counter
PC_0L	Least Significant 8 bits of Program Counter
PC_0U	Most Significant 8 bits of Program Counter
PC_1	Stack Register
PC_1L	Least Significant 8 bits of Program Counter
PC_1U	Most Significant 8 bits of Active Stack Register
Q	Registers #14 and #15
QL	Register #15
QU	Register #14
r	Scratchpad Register (any address thru 11)
W	Status Register

Scratchpad Addressing Modes (Machine Code Format)

r = C	(Hexadecimal), Register Addressed by ISAR (Unmodified)
r = D	(Hexadecimal), Register Addressed by ISAR; ISARL Incremented
r = E	(Hexadecimal). Register Addressed by ISAR; ISARL Decremented
r = F	(No operation performed)
r = 0 thru B	(Hexadecimal), Register 0 thru 11 addressed directly from the Instruction

Status Register

–	No change in condition
1/0	is set to "1" or "0" depending on conditions
CRY	Carry Flag
OVF	Overflow Flag
SIGN	Sign of Result Flag
ZERO	Zero Flag

POWER REQUIREMENTS: V_{DD} = +5.0 V ±5%; V_{GG} = +12.0 V ±5%; V_{SS} = 0 V; T_A = 0°C to 70°C; f = 2 MHz

PART TYPE	SYMBOL	PARAMETER	TYP	MAX	UNITS	TEST CONDITIONS (Outputs Unloaded)
3850	I_{DD}	V_{DD} Current	30	80	mA	2 MHz
	I_{GG}	V_{GG} Current	15	25	mA	
3851	I_{DD}	V_{DD} Current	30	70	mA	2 MHz
	I_{GG}	V_{GG} Current	10	18	mA	
3852	I_{DD}	V_{DD} Current	35	70	mA	2 MHz
3853	I_{GG}	V_{GG} Current	13	30	mA	
3854	I_{DD}	V_{DD} Current	20	40	mA	2 MHz
	I_{GG}	V_{GG} Current	15	28	mA	

SIGNAL ELECTRICAL SPECIFICATIONS: V_{DD} = +5.0 V ±5%; V_{GG} = +12.0 V ±5%; V_{SS} = 0 V; T_A = 0°C to 70°C; f = 2 MHz

SIGNAL NAME (NUMBER, TYPE)	SOURCE OR RECEIVING DEVICE	V_{OH} MIN	V_{IH} MIN	V_{OL} MAX	V_{IL} MAX	LOAD
DATA BUS (8 INPUTS/OUTPUTS)	3850 3851 3852/3 3854	3.9	3.5	0.4	0.8	100 pF $I_{SOURCE} = -100\ \mu A$ $I_{SINK} = 900\ \mu A$
CONTROL BUS (5 OUTPUTS)	3850	3.9		0.4		100 pF, $I_{SINK} = 900\ \mu A$ $I_{SOURCE} = -100\ \mu A$
CONTROL BUS (5 INPUTS)[1]	3851 3852/3		3.5		0.8	
I/O PORTS (16 INPUTS/OUTPUTS)	3850 3851	2.9 (1 TTL) 3.9 (unloaded)	3.5[2]	0.4	0.8	100 pF plus 1 H-TTL Load
CLOCK REFERENCE (INPUT)	3850		4.0		0.8	
SYSTEM CLOCKS (PHI AND WRITE OUTPUTS)	3850	4.4		0.4		100 pF, $I_{SINK} = 900\ \mu A$ $I_{SOURCE} = -100\ \mu A$
SYSTEM CLOCKS (PHI AND WRITE INPUTS)	3851 3852/3 3854		4.0		0.8	
RESET (INPUT)	3850		3.5[2]		0.8	I_{IL} = 0.3 mA Max at $V_{IN} = V_{SS}$
INTERRUPT CONTROL BIT (OUTPUT)	3850	3.9		0.4		50 pF plus 100 μA I_{SOURCE} or I_{SINK}
INTERRUPT REQUEST (INPUT)	3850		3.5[2]		0.8	I_{IL} = 1 mA Max at V_{IN} = 0.4
INTERRUPT REQUEST (OUTPUT)	3851 3853	OPEN DRAIN		0.4		100 pF plus I_{SINK} = 1 mA
EXTERNAL INTERRUPT (INPUT)	3851 3853		3.5		1.2	
PRIORITY IN (INPUT)	3851 3853		3.5		0.8	
PRIORITY OUT (OUTPUT)	3851	3.9		0.4		50 pF plus 100 μA I_{SOURCE} or I_{SINK}
DBDR (OUTPUT)	3851	OPEN DRAIN[3]		0.4		100 pF plus I_{SINK} = 2.5 mA
ADDRESS LINES and RAM WRITE (16 OUTPUTS)	3852/3 3854	4.0		0.4		500 pF plus 2 TTL Loads
REGDR (INPUT/OUTPUT)	3852/3	3.9	3.5	0.4	0.8	100 pF plus 1 H-TTL Load
CPU READ (OUTPUT)	3852/3	3.9		0.4		50 pF plus 1 H-TTL Load
MEM IDLE, CYCLE REQ and CPU SLOT (OUTPUTS)	3852	3.9		0.4		50 pF plus 1 H-TTL Load
MEM IDLE (INPUT)	3854		3.5		0.8	
ENABLE, DIRECTION, TRANSFER, DMA WRITE SLOT, STROBE (OUTPUTS)	3854	3.9		0.4		50 pF plus 1 H-TTL Load
XFER REQ, P1,P2 (INPUTS)	3854		3.5		0.8	
LOAD REG, READ REG (INPUTS)	3854		3.5		0.8	

[1]3854 receives two control signals from external decoding device. [2]Internal pull-up resistor to V_{DD}. [3]External pull-up resistor required.

FAIRCHILD U.S. SALES OFFICES

***HUNTSVILLE, ALABAMA**
3322 So. Memorial Parkway 35801
Suite 92
Tel: 205-883-7020 TWX: 810-726-2214

PHOENIX, ARIZONA
4414 N. 19th Avenue 85015
Suite G
Tel: 602-264-4948 TWX: 910-951-1544

***LOS ANGELES, CALIFORNIA**
6922 Hollywood Blvd. 90028
Suite 818
Tel: 213-466-8393 TWX: 910-321-3009

SAN DIEGO, CALIFORNIA
8333 Clairemont Mesa Blvd. 92111
Suite 109
Tel: 714-279-6021

***SANTA ANA, CALIFORNIA**
2101 East Fourth St. 92705
Bldg. B, Suite 185
Tel: 714-558-1881 TWX: 910-595-1109

***SANTA CLARA, CALIFORNIA**
3080 Olcott Street 95050
Suite 210A
Tel: 408-244-1400 TWX: 910-338-0241

***DENVER, COLORADO**
7475 W. 5th Ave., Suite 100
Lakewood, Colo. 80226
Tel: 303-234-9292

***STAMFORD, CONNECTICUT**
2nd Floor
2777 Summers Street 06905
Tel: 203-348-7701 TWX: 710-474-1763

ORLANDO, FLORIDA
Crane's Roost Office Park
303 Whooping Loop
Altamonte Springs, Fla. 32701
Tel: 305-834-7000 TWX: 810-850-0152

TAMPA, FLORIDA
12945 Seminole Blvd.
Florida Twin Towers Bldg. 2, Room 6
Largo, Fla. 33540
Tel: 813-585-3892

***CHICAGO, ILLINOIS**
9950 W. Lawrence Avenue
Room 311
Schiller Park, Ill. 60176
Tel: 312-671-4660 TWX: 910-227-0051

FORT WAYNE, INDIANA
2118 Inwood Drive 46805
Suite 111
Tel: 219-483-6453 TWX: 810-332-1507

***INDIANAPOLIS, INDIANA**
7202 N. Shadeland 46250
Tel: 317-849-5412 TWX: 810-260-1793

BLADENSBURG, MARYLAND
5801 Annapolis Road 20710
Suite 500
Tel: 301-779-0954 TWX: 710-826-9654

***BOSTON, MASSACHUSETTS**
888 Worcester Street
Wellesley Hills, Mass. 02181
Tel: 617-237-3400 TWX: 710-348-0424

DETROIT, MICHIGAN
Westland Office Plaza
33300 Warren Avenue Suite 101
Westland, Mich. 48185
Tel: 313-425-3250 TWX: 810-242-2973

MINNEAPOLIS, MINNESOTA
7600 Parklawn Avenue
Room 251
Edina, Minn. 55435
Tel: 612-835-3322 TWX:910-576-2944

WAYNE, NEW JERSEY
580 Valley Road 07490
Suite 1
Tel: 201-696-7070

ALBUQUERQUE, NEW MEXICO
2403 San Mateo N.E. 87110
Plaza #2
Tel: 505-265-5601 TWX: 910-989-1186

BINGHAMTON, NEW YORK
3215 E. Main St. Suite 7
Endwell, NY 13760
Tel: 607-754-1094

***MELVILLE, NEW YORK**
275 Broadhollow Road 11746
Tel: 516-293-2900 TWX: 510-224-6480

POUGHKEEPSIE, NEW YORK
15 College View Ave. 12603
Tel: 914-452-4200 TWX: 510-248-0030

***ROCHESTER, NEW YORK**
600 Kreag Rd.
Pittsford, NY 14534
Tel: 716-385-1130

SYRACUSE, NEW YORK
333 E. Onondaga Street 13202
Tel: 315-471-3391 TWX: 710-541-0499

CLEVELAND, OHIO
6151 Wilson Mills Rd.
Suite 101
Highland Heights, Ohio 44143
Tel: 216-461-8288 TWX: 810-427-9271

DAYTON, OHIO
4812 Frederick Road 45414
Suite 101
Tel: 513-278-8278 TWX: 810-459-1803

TULSA, OKLAHOMA
5321 S. Sheridan Road 74145
Suite 15
Tel: 918-663-7131

***PHILADEPHIA, PENNSYLVANIA**
Fort Washington Industrial Park
500 Office Center
Fort Washington, Pa. 19034
Tel: 215-886-6623 TWX: 510-665-1654

SENECA, SOUTH CAROLINA
27 Normany Shores
Annex 2, RFD
Seneca, South Carolina 29678
Tel: 803-882-1760

***DALLAS, TEXAS**
13771 N. Central Expressway 75231
Suite 809
Tel: 214-234-3391 TWX: 910-867-4757

***HOUSTON, TEXAS**
6430 Hillcroft 77036
Suite 102
Tel: 713-771-3547 TWX: 910-881-6278

MILWAUKEE, WISCONSIN
4642 76th Street
Suite 101
Greenfield, Wisconsin 53220
Tel: 414-282-5260

INTERNATIONAL FIELD SALES OFFICES

AUSTRALIA
Fairchild Australia Pty. Ltd.
420 Mount Dandenong Road
Croydon, Victoria, 3136
Australia
Tel: 723-4131 TWX: 30846

AUSTRIA
Fairchild Electronics
Schwedenplatz 2
1010 Vienna
Tel: 0043 222635821
Telex: 0047 75096

BRAZIL
Fairchild Electronica Ltd.
Caixa Postal 30407
Rua de Consola Cao, 3542
Sao Paulo S.P., Brazil
Tel: 81-6168 Telex: 021-261
Cable: FAIRLEC

CANADA
Toronto Regional Office
FSC
1590 Matheson Blvd. Unit 26
Mississauga, Ontario L4W 1J1, Canada
Tel: 416-625-7070 TWX: 610-492-4311

Fairchild Semiconductor
1385 Mazurette Suite 3
Montreal, Quebec, H4N 1G8, Canada
Tel: 514-382-2552 TWX: 610-421-3178

FRANCE
Fairchild Semiconducteurs, S.A.
121 Avenue d'Italien
750310, Paris, France
Tel: 00331 5805566
Telex: 0042 20614

GERMANY
Fairchild Halbleiter GmbH
European Headquarters
6202 Wiesbaden-Biebrich
Postfach 4559
Hagenauer Strasse 38
Tel: 06121 2051 Telex: 841-4186588

Fairchild Halbleiter GmbH
8 Munchen 80
Truderinger Str. 13
Tel: 089 4701091-3 Telex: 05 24831

Fairchild Halbleiter GmbH
8500 Nurnberg
Waldluststr. 1
Tel: 0911 407005 Telex: 06-23665

Fairchild Halbleiter GmbH
725 Leonberg-Eltingen
Poststr. 37
Tel: 07152-41026 Telex: 07-22644

HONG KONG
Fairchild Semiconductor (HK) Ltd.
135 Hoi Bun Road
Kwun Tong
Kowloon, Hong Kong
Tel: K-890271 Telex: HKG-531

ITALY
Fairchild Semiconduttori, S.p.A.
Viale Cortina d'Ampezzo, 152
00135 Rome, Italy
Tel: 00396 3274006

Fairchild Semiconduttori S.p.A.
Via Rosselini, 12
20124 Milano, Italy
Tel: 00392 6887451-5

JAPAN
TDK-Fairchild
Sanyo Kokusaku Pulp Bldg. 2nd Fl.
7-8 Shibuya 1-Chome
Shibuya-ku
Tokyo 150, Japan
Tel: 03-400-8351 Telex: 2424173

MEXICO
Fairchild Mexicana S.A.
Blvd. Adolfo Lopez Mateos No. 163
Mexico 19, D.F.
Tel: 905-563-5411 Telex: 017-71-038

SCOTLAND
Fairchild Semiconductor Ltd.
Shiel House
Craigshill
Livingston
West Lothian, Scotland
Tel: 00445 8932891
Telex: 0051 72629

SWEDEN
Fairchild Semiconductor AB
Svartensgatan 6,
S-11620 Stockholm
Tel: 00468-449255 Telex: 0054-17759

TAIWAN
Fairchild Semiconductor (Taiwan) Ltd.
Hsietsu Building, Room 502
47 Chung Shan North Road
Sec. 3, Taipei, Taiwan
Tel: 573205 thru 573207

THE NETHERLANDS
Fairchild Semiconductor
Paradijslaan 39
Eindhoven, Holland
Tel: 003140-446909 Telex: 0044-51024

UNITED KINGDOM
Fairchild Semiconductor Ltd.
Kingmaker House
Station Road
New Barnet/Hertfordshire
Tel: 00441 4407311 Telex: 0051 262835

*Field Applications Engineer available.

FAIRCHILD FRANCHISED U.S. DISTRIBUTORS

ALABAMA
HALLMARK ELECTRONICS
4739 Commercial Drive
Huntsville, Alabama 35805
Tel: 205-837-8700 TWX: 810-726-2187

HAMILTON/AVNET ELECTRONICS
805 Oster Drive, N.W.
Huntsville, Alabama 35805
Tel: 205-533-1170
Telex: None — use HAMAVLECB DAL 73-0511
(Regional Hq. in Dallas, Texas)

ARIZONA
HAMILTON/AVNET ELECTRONICS
2615 S. 21st Street
Phoenix, Arizona 85034
Tel: 602-275-7851 TWX: 910-951-1535

LIBERTY ELECTRONICS/ARIZONA
3130 N. 27th Avenue
Phoenix, Arizona 85016
Tel: 602-257-1272 TWX: 910-951-4282

CALIFORNIA
AVNET ELECTRONICS
10916 W. Washington Blvd.
Culver City, California 90230
Tel: 213-558-2345 TWX: 910-340-6364

BELL INDUSTRIES
Electronic Distributor Division
1161 N. Fair Oaks Avenue
Sunnyvale, California 94086
Tel: 408-734-8570 TWX: 910-339-9378

ELMAR ELECTRONICS
2288 Charleston Rd.
Mountain View, California 94042
Tel: 415-961-3611 TWX: 910-379-6437

HAMILTON ELECTRO SALES
10912 W. Washington Blvd.
Culver City, California 90230
Tel: 213-558-2121 TWX: 910-340-6364

HAMILTON/AVNET ELECTRONICS
575 E. Middlefield Road
Mountain View, California 94040
Tel: 415-961-8600 TWX: 910-379-6486

HAMILTON/AVNET ELECTRONICS
8917 Complex Drive
San Diego, California 92123
Tel: 714-279-2421
Telex: HAMAVELEC SDG 69-5415

G.S. MARSHALL COMPANY
9674 Telstar Avenue
El Monte, California 91731
Tel: 213-686-0141 TWX: 910-587-1565

G.S. MARSHALL COMPANY
17975 Skypark Blvd.
Irvine, California 92707
Tel: 714-556-6400

G.S. MARSHALL COMPANY
8057 Raytheon Rd., Suite 1
San Diego, California 92111
Tel: 714-278-6350 TWX: 910-335-1191

LIBERTY ELECTRONICS
124 Maryland Street
El Segundo, California 90245
Tel: 213-322-8100 TWX: 910-348-7111

LIBERTY ELECTRONICS/SAN DIEGO
8248 Mercury Court
San Diego, California 92111
Tel: 714-565-9171 TWX: 910-335-1590

COLORADO
ELMAR ELECTRONICS
6777 E. 50th Avenue
Commerce City, Colorado 80022
Tel: 303-287-9611 TWX: 910-936-0770

G.S. MARSHALL COMPANY
5633 Kendall Court
Arvada, Colorado 80002
Tel: 303-423-9670 TWX: 910-938-2902

HAMILTON/AVNET ELECTRONICS
5921 N. Broadway
Denver, Colorado 80216
Tel: 303-534-1212 TWX: 910-931-0510

CONNECTICUT
HAMILTON/AVNET ELECTRONICS
643 Danbury Road
Georgetown, Connecticut 06829
Tel: 203-762-0361
TWX: None — use 710-897-1405
(Regional Hq. in Mt. Laurel, N.J.)

HARVEY ELECTRONICS
112 Main Street
Norwalk, Connecticut 06851
Tel: 203-853-1515

SCHWEBER ELECTRONICS
Finance Drive
Commerce Industrial Park
Danbury, Connecticut 06810
Tel: 203-792-3500

FLORIDA
HALLMARK ELECTRONICS
1302 W. McNab Road
Ft. Lauderdale, Florida 33309
Tel: 305-971-9280 TWX: 510-956-3092

HALLMARK ELECTRONICS
7233 Lake Ellenor Drive
Orlando, Florida 32809
Tel: 305-855-4020 TWX: 810-850-0183

HAMILTON/AVNET ELECTRONICS
4020 North 29th Avenue
Hollywood, Florida 33021
Tel: 305-925-5401 TWX: 510-954-9808

SCHWEBER ELECTRONICS
2830 North 28th Terrace
Hollywood, Florida 33020
Tel: 305-927-0511 TWX: 510-954-0304

GEORGIA
HAMILTON/AVNET ELECTRONICS
6700 Interstate 85 Access Road, Suite 1E
Norcross, Ga. 30071
Tel: 404-448-0800
Telex: None — use HAMAVLECB DAL 73-0511
(Regional Hq. in Dallas, Texas)

SCHWEBER ELECTRONICS
4126 Pleasantdale Rd., Suite 14
Atlanta, Ga. 30340
Tel: 404-449-9170

ILLINOIS
ALLIED ELECTRONICS
1355 Sleepy Hollow Road
Elgin, Illinois 60120
Tel: 312-697-8200
Telex: 72-2465 or 72-2466

KIERULFF ELECTRONICS
9340 Williams Street
Rosemont, Illinois 60018
Tel: 312-678-8560 TWX: 910-227-3166

HAMILTON/AVNET ELECTRONICS
3901 N. 25th Avenue
Schiller Park, Illinois 60176
Tel: 312-678-6310 TWX: 910-227-0060

SCHWEBER ELECTRONICS, INC.
1380 Jarvis Ave.
Elk Grove Village, Ill. 60007
Tel: 312-593-2740 TWX: 910-222-3453

SEMICONDUCTOR SPECIALISTS, INC.
(mailing address)
O'Hare International Airport
P.O. Box 66125
Chicago, Illinois 60666

(shipping address)
195 Spangler Avenue
Elmhurst Industrial Park
Elmhurst, Illinois 60126
Tel: 312-279-1000 TWX: 910-254-0169

INDIANA
PIONEER INDIANA ELECTRONICS, INC.
6408 Castleplace Drive
Indianapolis, Indiana 46250
Tel: 317-849-7300 TWX: 810-260-1794

SEMICONDUCTOR SPECIALISTS, INC.
(mailing address)
Weir Cook Airport
P.O. Box 41630
Indianapolis, Indiana 46241

(shipping address)
1885 Banner Ave.
Indianapolis, Indiana 46241
Tel: 317-243-8271 TWX: 810-341-3126

IOWA
SCHWEBER ELECTRONICS
Suite 302, Executive Plaza
4403 First Avenue S.E.
Cedar Rapids, Iowa 52402
Tel: 319-393-9125

KANSAS
HAMILTON/AVNET ELECTRONICS
37 Lenexa Industrial Center
9900 Pflumm Road
Lenexa, Kansas 66215
Tel: 913-888-8900
Telex: None — use HAMAVLECB DAL 73-0511
(Regional Hq. in Dallas, Texas)

LOUISIANA
STERLING ELECTRONICS CORP.
4613 Fairfield
Metairie, Louisiana 70002
Tel: 504-887-7610
Telex: STERLE LEC MRIE 58-328

MARYLAND
HAMILTON/AVNET ELECTRONICS
(mailing address)
Friendship International Airport
P.O. Box 8647
Baltimore, Maryland 21240

(shipping address)
7255 Standard Drive
Hanover, Maryland 21076
Tel: 301-796-5000 TWX: 710-862-1861
Telex: HAMAVLECA HNVE 87-968

SCHWEBER ELECTRONICS
5640 Fisher Lane
Rockville, Maryland 20852
Tel: 301-881-2970 TWX: 710-828-0536

PIONEER WASHINGTON ELECTRONICS, INC.
9100 Gaither Road
Gaithersburg, Maryland 20760
Tel: 301-948-0710 TWX: 710-828-9784

MASSACHUSETTS
GERBER ELECTRONICS
852 Providence Highway
U.S. Route 1
Dedham, Massachusetts 02026
Tel: 617-239-2400

HAMILTON/AVNET ELECTRONICS
185 Cambridge Street
Burlington, Massachusetts 01803
Tel: 617-273-2120 TWX: 710-332-1201

KIERULFF ELECTRONICS
13 Fortune Drive
Billerica, Massachusetts 01865
Tel: 617-667-8331 (Local)
617-935-5134 (from Boston Area)
TWX: 710-390-1449

SCHWEBER ELECTRONICS
213 Third Avenue
Waltham, Massachusetts 02154
Tel: 617-890-8484

MICHIGAN
HAMILTON/AVNET ELECTRONICS
12870 Farmington Rd.
Livonia, Michigan 48150
Tel: 313-522-4700 TWX: 810-242-8775

PIONEER/DETROIT
13485 Stamford
Livonia, Michigan 48150
Tel: 313-525-1800

SCHWEBER ELECTRONICS
86 Executive Drive
Troy, Michigan 48084
Tel: 313-583-9242

SHERIDAN SALES CO.
24543 Indoplex Drive (P.O. Box 529)
Farmington, Mich. 48024
Tel: 313-477-3800

MINNESOTA
HAMILTON/AVNET ELECTRONICS
7683 Washington Ave. South
Edina, Minnesota 55435
Tel: 612-941-3801
TWX: None — use 910-227-0060
(Regional Hq. in Chicago, Ill.)

SCHWEBER ELECTRONICS
7015 Washington Ave. South
Edina, Minnesota 55435
Tel: 612-941-5280

SEMICONDUCTOR SPECIALISTS, INC.
8030 Cedar Avenue South
Minneapolis, Minnesota 55420
Tel: 612-854-8841 TWX: 910-576-2812

MISSOURI
HAMILTON/AVNET ELECTRONICS
364 Brookes Lane
Hazelwood, Missouri 63042
Tel: 314-731-1144
Telex: HAMAVLECA HAZW 44-2348

SEMICONDUCTOR SPECIALISTS, INC.
3805 N. Oak Trafficway
Kansas City, Mo. 64116
Tel: 816-452-3900 TWX: 910-771-2114

SEMICONDUCTOR SPECIALISTS, INC.
Lakeview Square
1020 Anglum Road
Hazelwood, Missouri 63042
Tel: 314-731-2400 TWX: 910-762-0645

NEW JERSEY
HAMILTON/AVNET ELECTRONICS
113 Gaither Drive
East Gate Industrial Park
Mt. Laurel, N.J. 08057
Tel: 609-234-2133 TWX: 710-897-1405

FAIRCHILD FRANCHISED U.S. DISTRIBUTORS (cont.)

NEW JERSEY (Cont.)

HAMILTON/AVNET ELECTRONICS
218 Little Falls Road
Cedar Grove, New Jersey 07009
Tel: 201-239-0800 TWX: 710-994-5787

KIERULFF ELECTRONICS
#5 Industrial Drive
Rutherford, New Jersey 07070
Tel: 201-935-2120 TWX: 710-989-0225

STERLING ELECTRONICS
774 Pfeiffer Blvd.
Perth Amboy, N.J. 08861
Tel: 201-442-8000 Telex: 138-679

SCHWEBER ELECTRONICS
43 Belmont Drive
Somerset, N.J. 08873
Tel: 201-469-6008 TWX: 710-480-4733

NEW MEXICO
CENTURY ELECTRONICS
121 Elizabeth, N.E.
Albuquerque, New Mexico 87123
Tel: 505-292-2700 TWX: 910-989-0625

HAMILTON/AVNET ELECTRONICS
2450 Baylor Dr. S.E.
Albuquerque, New Mexico 87119
Tel: 505-765-1500
TWX: None — use 910-379-6486
(Regional Hq. in Mt. View, Ca.)

NEW YORK
HAMILTON/AVNET ELECTRONICS
167 Clay Road
Rochester, New York 14623
Tel: 716-442-7820
TWX: None — use 710-332-1201
(Regional Hq. in Burlington, Mass.)

HAMILTON/AVNET ELECTRONICS
6500 Joy Road
E. Syracuse, New York 13057
Tel: 315-437-2642 TWX: 710-541-0959

HAMILTON/AVNET ELECTRONICS
70 State Street
Westbury, L.I., New York 11590
Tel: 516-333-5800 TWX: 510-222-8237

SCHWEBER ELECTRONICS
Jericho Turnpike
Westbury, L.I., New York 11590
Tel: 516-334-7474 TWX: 510-222-3660

SCHWEBER ELECTRONICS, INC.
2 Town Line Circle
Rochester, New York 14623
Tel: 716-461-4000

SEMICONDUCTOR CONCEPTS
195 Engineers Rd.
Hauppauge, New York 11787
Tel: 516-273-1234 TWX: 510-227-6232

SUMMIT DISTRIBUTORS, INC.
916 Main Street
Buffalo, New York 14202
Tel: 716-884-3450 TWX: 710-522-1692

NORTH CAROLINA
HALLMARK ELECTRONICS
3000 Industrial Drive
Raleigh, North Carolina 27609
Tel: 919-832-4465 TWX: 510-928-1831

PIONEER/CAROLINA ELECTRONICS
2906 Baltic Avenue
Greensboro, North Carolina 27406
Tel: 919-273-4441

OHIO
ARROW ELECTRONICS, INC.
3100 Plainfield Road
Kettering, Ohio 45429
Tel: 513-253-9176 TWX: 810-459-1611

HAMILTON/AVNET ELECTRONICS
761 Beta Drive, Suite "E"
Cleveland, Ohio 44143
Tel: 216-461-1400
TWX: None — use 910-227-0060
(Regional Hq. in Chicago, Ill.)

HAMILTON/AVNET ELECTRONICS
118 Westpark Road
Dayton, Ohio 45459
Tel: 513-433-0610 TWX: 810-450-2531

PIONEER/CLEVELAND
4800 East 131st Street
Cleveland, Ohio 44105
Tel: 216-587-3600

SCHWEBER ELECTRONICS
23880 Commerce Park Road
Beachwood, Ohio 44122
Tel: 216-464-2970 TWX: 810-427-9441

SHERIDAN SALES COMPANY
23224 Commerce Park Road
Beachwood Ohio 44122
Tel: 216-831-0130 TWX: 810-427-2957

SHERIDAN SALES CO.
(mailing address)
P.O. Box 37826
Cincinnati, Ohio 45222

(shipping address)
10 Knollcrest Drive
Reading, Ohio 45237
Tel: 513-761-5432 TWX: 810-461-2670

OKLAHOMA
HALLMARK ELECTRONICS
4846 South 83rd East Avenue
Tulsa, Oklahoma 74145
Tel: 918-835-8458 TWX: 910-845-2290

PENNSYLVANIA
HALLMARK ELECTRONICS, INC.
458 Pike Road
Huntingdon Valley, Pennsylvania 19006
Tel: 215-355-7300 TWX: 510-667-1727

PIONEER/DELWARE VALLEY, INC.
203 Witmer Rd.
Horsham, Pennsylvania 19044
Tel: 215-674-5710 (from Pennsylvania phones)
Tel: 609-541-1120 (from New Jersey phones)

SHERIDAN SALES COMPANY
1717 Penn Ave.
Suite 5009
Pittsburgh, Pennsylvania 15221
Tel: 412-244-1640

TEXAS
HAMILTON/AVNET ELECTRONICS
4445 Sigma Road
Dallas, Texas 75240
Tel: 214-661-8661
Telex: HAMAVLECB DAL 73-0511

HAMILTON/AVNET ELECTRONICS
1216 West Clay
Houston, Texas 77019
Tel: 713-526-4661
Telex: HAMAVLECB HOU 76-2589

NORVELL ELECTRONICS, INC.
10210 Monroe Drive
(P.O. Box 20279)
Dallas, Texas 75220
Tel: 214-350-6771 TWX: 910-861-4512

NORVELL ELECTRONICS, INC.
6440 Hillcroft Avenue
Houston, Texas 77036
Tel: 713-774-2568 TWX: 910-881-2560

SCHWEBER ELECTRONICS, INC.
2628 Longhorn Blvd.
Austin, Texas 78758
Tel: 512-837-2890 TWX: 910-874-1359

SCHWEBER ELECTRONICS, INC.
14177 Proton Road
Dallas, Texas 75240
Tel: 214-661-5010 TWX: 910-860-5493

SCHWEBER ELECTRONICS, INC.
7420 Harwin Drive
Houston, Texas 77036
Tel: 713-784-3600 TWX: 910-881-1109

STERLING ELECTRONICS
4201 Southwest Freeway
Houston, Texas 77027
Tel: 713-627-9800 TWX: 910-881-5042
Telex: STELECO HOUA 77-5299

UTAH
HAMILTON/AVNET ELECTRONICS
647 W. Billinis Rd.
Salt Lake City, Utah 84119
Tel: 801-262-8451
TWX: None — use 910-379-6486
(Regional Hq. in Mt. View, Ca.)

WASHINGTON
HAMILTON/AVNET ELECTRONICS
13407 Northrup Way
Bellevue, Washington 98005
Tel: 206-746-8750 TWX: 910-443-2449

LIBERTY ELECTRONICS
5305 2nd Ave. South
Seattle, Washington 98108
Tel: 206-763-8200 TWX: 910-444-1379

WISCONSIN
HAMILTON/AVNET ELECTRONICS
6055 N. Santa Monica Blvd.
Whitefish Bay, Wisconsin 53717
Tel: 414-964-3482

MARSH ELECTRONICS, INC.
6047 Beloit Road
Milwaukee, Wisconsin 53219
Tel: 414-545-6500 TWX: 910-262-3321

SEMICONDUCTOR SPECIALISTS, INC.
10855 W. Potter Road
Wauwatosa, Wisconsin 53226
Tel: 414-257-1330 TWX: 910-262-3022

CANADA
CAM GARD SUPPLY LTD.
640 42nd Avenue S.E.
Calgary, Alberta, T2G 1Y6, Canada
Tel: 403-287-0520 Telex: 03-822811

CAM GARD SUPPLY LTD.
10505 111th Street
Edmonton, Alberta, T5H 3E8, Canada
Tel: 403-426-1805 Telex: 03-72960

CAM GARD SUPPLY LTD.
4910 52nd Street
Red Deer, Alberta, T4N 2C8, Canada
Tel: 403-346-2088

CAM GARD SUPPLY LTD.
825 Notre Dame Drive
Kamloops, British Columbia, V2C 5N8, Canada
Tel: 604-372-3338

CAM GARD SUPPLY LTD.
1777 Ellice Avenue
Winnepeg, Manitoba, R3H 0W5, Canada
Tel: 204-786-8401 Telex: 07-57622

CAM GARD SUPPLY LTD.
Rookwood Avenue
Fredericton, New Brunswick, E3B 4Y9, Canada
Tel: 506-455-8891

CAM GARD SUPPLY LTD.
15 Mount Royal Blvd.
Moncton, New Brunswick, E1C 8N6, Canada
Tel: 506-855-2200

CAM GARD SUPPLY LTD.
Courtenay Center
Saint John, New Brunswick, E2L 2X6, Canada
Tel: 506-657-4666 Telex: 01-447489

CAM GARD SUPPLY LTD.
3065 Robie Street
Halifax, Nova Scotia, B3K 4P6, Canada
Tel: 902-454-8581 Telex: 01-921528

CAM GARD SUPPLY LTD.
1303 Scarth Street
Regina, Saskatchewan, S4R 27, Canada
Tel: 306-525-1317 Telex: 07-12667

CAM GARD SUPPLY LTD.
1501 Ontario Avenue
Saskatoon, Saskatchewan, S7K 17, Canada
Tel: 306-652-6424 Telex: 07-42825

ELECTRO SONIC INDUSTRIAL SALES (TORONTO) LTD.
1100 Gordon Baker Rd.
Willowdale, Ontario, M2H 3B3, Canada
Tel: 416-494-1666
Telex: ESSCO TOR 06-22030

HAMILTON/AVNET INTERNATIONAL (CANADA) LTD.
6291 Dorman Rd., Unit #16
Mississauga, Ontario, L4V 1H2, Canada
Tel: 416-677-7432 TWX: 610-492-8867

HAMILTON/AVNET INTERNATIONAL (CANADA) LTD.
1735 Courtwood Crescent
Ottawa, Ontario, K1Z, 5L9, Canada
Tel: 613-226-1700

HAMILTON/AVNET INTERNATIONAL (CANADA) LTD.
2670 Paulus Street
St. Laurent, Quebec, H4S 1G2, Canada
Tel: 514-331-6443 TWX: 610-421-3731

R.A.E. INDUSTRIAL ELECTRONICS, LTD.
1629 Main Street
Vancouver, British Columbia, V6A 2W5, Canada
Tel: 604-687-2621 TWX: 610-929-3065
Telex: RAE-VCR 04-54550

SCHWEBER ELECTRONICS
2724 Rena Road
Mississauga, Ontario, L4T 3J9, Canada
Tel: 416-678-9050

FAIRCHILD U.S. SALES REPRESENTATIVES

ALABAMA
CARTWRIGHT & BEAN, INC.
901 Magnolia Drive, N.W.
Huntsville, Alabama 35805
Tel: 205-533-3509

CALIFORNIA
CELTEC COMPANY
7380 Clairemont Mesa Blvd., Suite 109
San Diego, California 92111
Tel: 714-279-7961 TWX: 910-335-1512

CELTEC COMPANY
2041 Business Center Drive, Suite 211
Irvine, California 92664
Tel: 714-752-6111 TWX: 910-595-2512

CELTEC COMPANY
6767 Forest Lawn Drive
Los Angeles, California 90068
Tel: 213-874-6002

MAGNA SALES, INC.
3080 Olcott Street, Suite 210A
Santa Clara, California 95050
Tel: 408-985-1750 TWX: 910-338-0241

COLORADO
SIMPSON ASSOCIATES, INC.
2552 Ridge Road
Littleton, Colorado 80120
Tel: 303-794-8381 TWX: 910-935-0719

CONNECTICUT
LORAC SALES, INC.
2777 Summer Street
Stamford, Connecticut 06905
Tel: 203-348-7701 TWX: 710-474-1763

FLORIDA
WMM ASSOCIATES, INC.
101 Wymore Road, Suite 300
Altamonte Springs, Florida 32701
Tel: 305-862-4700

WMM ASSOCIATES, INC.
1822 Drew Street
Clearwater, Florida 33519
Tel: 813-447-2533 TWX: 810-866-4108

WMM ASSOCIATES, INC.
1628 E. Atlantic Blvd.
Pompano Beach, Florida 33060
Tel: 305-943-3091 TWX: 510-956-9891

GEORGIA
CARTWRIGHT & BEAN, INC.
P.O. Box 52846
90 W. Wieuca Square, Suite 155
Atlanta, Georgia 30342
Tel: 404-255-5262

INDIANA
LESLIE M. DEVOE COMPANY
7172 North Keystone Ave., Suite C
Indianapolis, Indiana 46240
Tel: 317-257-1227 TWX: 810-341-3284

KANSAS
B.C. ELECTRONIC SALES, INC.
1015 West Santa Fe
Olathe, Kansas 66061
Tel: 913-782-6696 TWX: 910-749-6414

B.C. ELECTRONIC SALES, INC.
1229 South Paige
Wichita, Kansas 67207
Tel: 316-686-3394

MARYLAND
L.D. LOWERY
5801 Annapolis Road, Suite 500
Bladensburg, Maryland 20710
Tel: 301-779-0954 TWX: 710-826-9654

MASSACHUSETTS
SPECTRUM ASSOCIATES, INC.
888 Worcester Street
Wellesley, Massachusetts 02181
Tel: 617-237-2796 TWX: 710-348-0424

MICHIGAN
RATHSBURG ASSOCIATES
16621 E. Warren Ave.
Detroit, Michigan 48224
Tel: 313-882-1717 Telex: 23-5229

MINNESOTA
PSI COMPANY
7710 Computer Avenue
Minneapolis, Minnesota 55435
Tel: 612-835-1777 TWX: 910-576-2740

MISSISSIPPI
CARTWRIGHT & BEAN, INC.
P.O. Box 3730
5250 Galaxy Drive, Suite J
Jackson, Mississippi 39207
Tel: 601-981-1368

MISSOURI
B.C. ELECTRONIC SALES, INC.
320 Brookes Drive, Suite 204
Hazelwood, Missouri 63042
Tel: 314-731-1255 TWX: 910-762-0651

NEW JERSEY
LORAC SALES, INC.
580 Valley Road
Wayne, New Jersey 07470
Tel: 201-696-7070 TWX: 710-988-5846

NEW YORK
LORAC SALES, INC.
275 Broadhollow Road
Melville, L.I., New York 11746
Tel: 516-293-2970 TWX: 510-224-6480

SPECTRUM SALES, INC.
65 Circuit Avenue
Tuckahoe, New York 10707
Tel: 914-793-1660
(Microwave Product Only)

NORTH CAROLINA
CARTWRIGHT & BEAN, INC.
625 Harwyn Drive
Charlotte, North Carolina 28215
Tel: 704-333-6457

CARTWRIGHT & BEAN, INC.
P.O. Box 11209
2415-G Crabtree Blvd.
Raleigh, North Carolina 27604
Tel: 919-832-7128

OHIO
COMPONENTS, INC.
7461 N. Linden Lane
Cleveland, Ohio
Tel: 216-842-2737

COMPONENTS, INC.
5835 Oakridge Drive
Hamilton, Ohio 45011
Tel: 513-721-2997

PENNSYLVANIA
BGR ASSOCIATES
500 Office Center
Fort Washington Industrial Park
Fort Washington, Pennsylvania 19034
Tel: 215-886-6623

L.D. LOWERY
2801 West Chester Pike
Broomall, Pennsylvania 19008
Tel: 215-356-5300 or 215-528-5170

TENNESSEE
CARTWRIGHT & BEAN, INC.
P.O. Box 4760
560 S. Cooper Street
Memphis, Tennessee 38104
Tel: 901-276-4442

CARTWRIGHT & BEAN, INC.
8501 Kingston Pike
Knoxville, Tennessee 37919
Tel: 615-693-7450

TEXAS
TECHNICAL MARKETING
4445 Alpha Road
Dallas, Texas 75240
Tel: 214-387-3601 TWX: 910-860-5158

TECHNICAL MARKETING
6430 Hillcroft, Suite 102
Houston, Texas 77036
Tel: 713-771-8466

UTAH
SIMPSON ASSOCIATES, INC.
2480 So. Main Street, Suite 105
Salt Lake City, Utah 84115
Tel: 801-486-3731 TWX: 910-925-5253

WASHINGTON
QUADRA CORPORATION
1621 - 114th Avenue S.E.
Suite 212
Bellevue, Washington 98004
Tel: 206-454-4946 TWX: 910-443-2318

CANADA
AVOTRONICS LIMITED
200 Consumers Road, Suite 200
Willowdale, Ontario, M2J 1P8, Canada
Tel: 416-493-9711

AVOTRONICS LIMITED
6600 Trans Canada Highway, Suite 750
Pointe Claire, Quebec, H9R 4S2, Canada
Tel: 514-697-2135 TWX: 610-422-3908
Telex: 05-821-762

Fairchild cannot assume responsibility for use of any circuitry described other than circuitry entirely embodied in a Fairchild product. No other circuit patent licenses are implied.
Printed in U.S.A./2020-70-0005-055/30M