United States Patent [19]

Smith et al.

[11] **4,095,791**

[45] **Jun. 20, 1978**

[54] **CARTRIDGE PROGRAMMABLE VIDEO GAME APPARATUS**

[75] Inventors: **Ronald A. Smith**, Los Gatos; **Nicholas F. Talesfore**, San Jose, both of Calif.

[73] Assignee: **Fairchild Camera and Instrument Corp.**, Mountain View, Calif.

[21] Appl. No.: **716,909**

[22] Filed: **Aug. 23, 1976**

[51] **Int. Cl.**[2] **A63F 7/06**

[52] **U.S. Cl.** ..... **273/85 G**; 206/328; 273/DIG. 28; 361/399

[58] **Field of Search** ..... 273/1 E, 85 R, DIG. 28, 273/1; 35/8 A, 9 A; 206/303, 444, 328; 340/324 R, 323 R, 311; 346/134–137; 360/93, 95, 96, 132, 33; 364/200, 900; 339/176 MP, 17 LL, 17 M, 176, 17; 361/399

[56] **References Cited**

U.S. PATENT DOCUMENTS

3,481,607	12/1969	Jenkins et al.	360/93
3,542,370	11/1970	Laa	360/93
3,612,540	12/1971	Turner	360/93
3,672,603	6/1972	Swain	360/132 X
3,701,071	10/1972	Landman	339/17 M X
3,789,345	1/1974	Reimer et al.	339/176 MA X
3,800,328	3/1974	Harlan et al.	360/96 X
3,900,170	8/1975	Serizawa	360/96 X
3,921,161	11/1975	Baer	273/85 R X
3,925,779	12/1975	Gerstenhaber	340/311 X
3,950,787	4/1976	Hosaka	360/96 X
3,957,225	5/1976	Vogel	360/96 X
3,987,484	10/1976	Bosch et al.	35/10 X
4,002,892	1/1977	Zielinski	339/17 LC X
4,021,006	5/1977	Morimoto	360/96 X
4,026,555	5/1977	Kirschner et al.	340/324 AD

OTHER PUBLICATIONS

Electronics, "Games", Jun. 24, 1976, pp. 89–96, 33.

Primary Examiner—Vance Y. Hum

Attorney, Agent, or Firm—Alan H. MacPherson; Henry K. Woodward; Robert C. Colwell

[57] **ABSTRACT**

A video game apparatus for connection to a standard television set and including an electronics-containing console having a plurality of parameter selection buttons and a chute mechanism for receiving a replaceable cartridge-containing supplementary electronic circuitry, and a pair of hand controllers for providing player control inputs to the console electronics. Improved connector apparatus is associated with the chute mechanism to enable electrical connection to be made to a cartridge contained printed circuit board with a minimum of insertion force.

11 Claims, 12 Drawing Figures

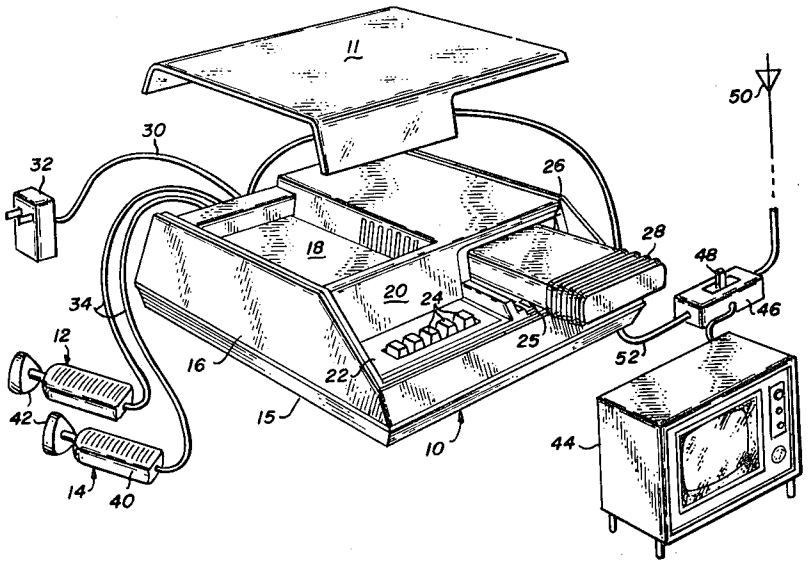

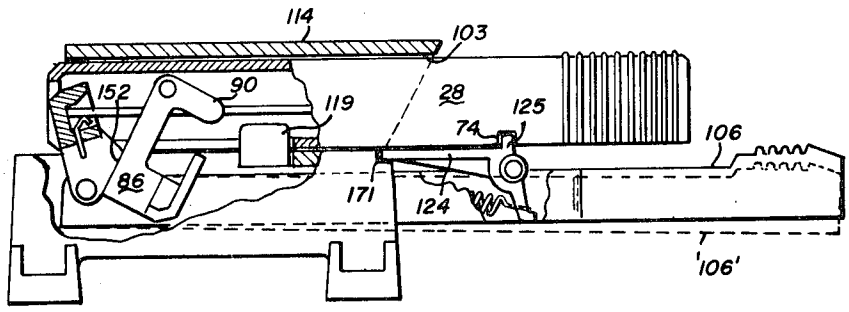

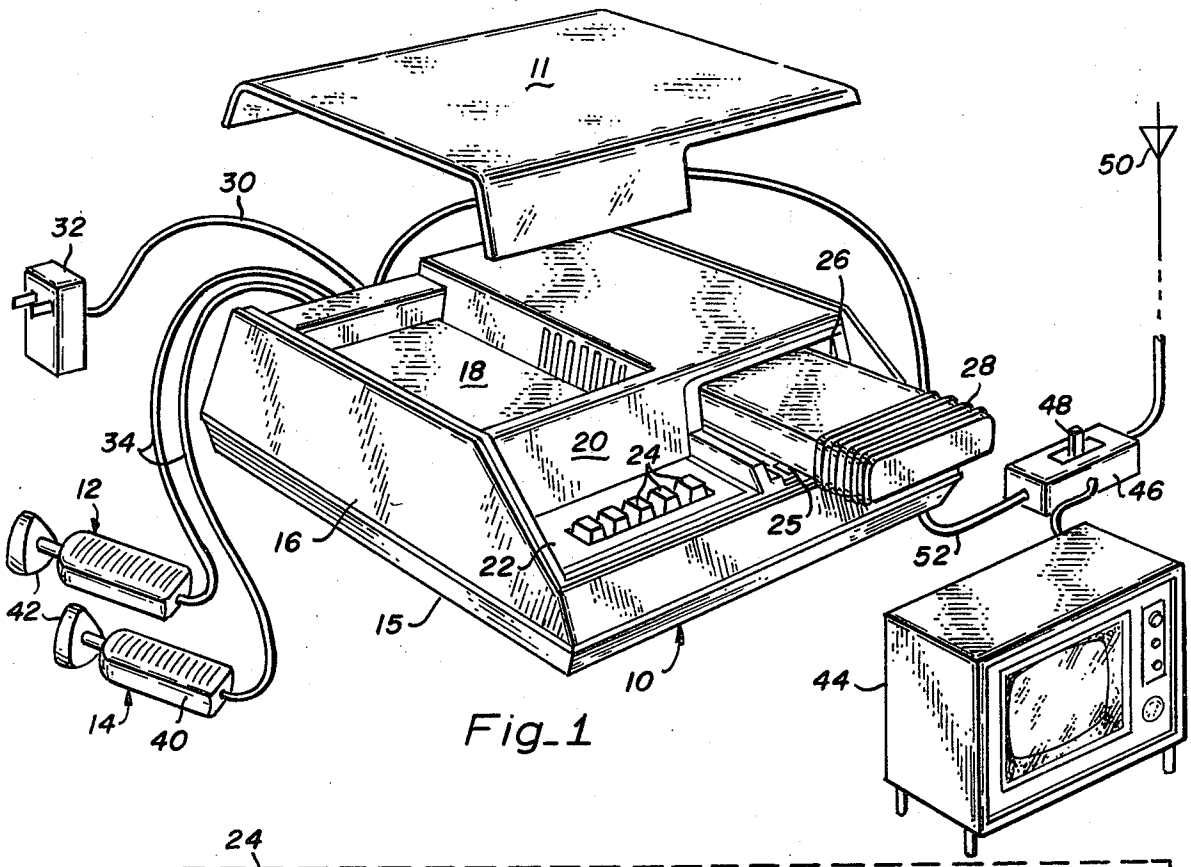
11
30
32
50
26
18
28
48
34
20
24
46
12
25
16
52
22
42
15
10
44
14
40

Fig_1

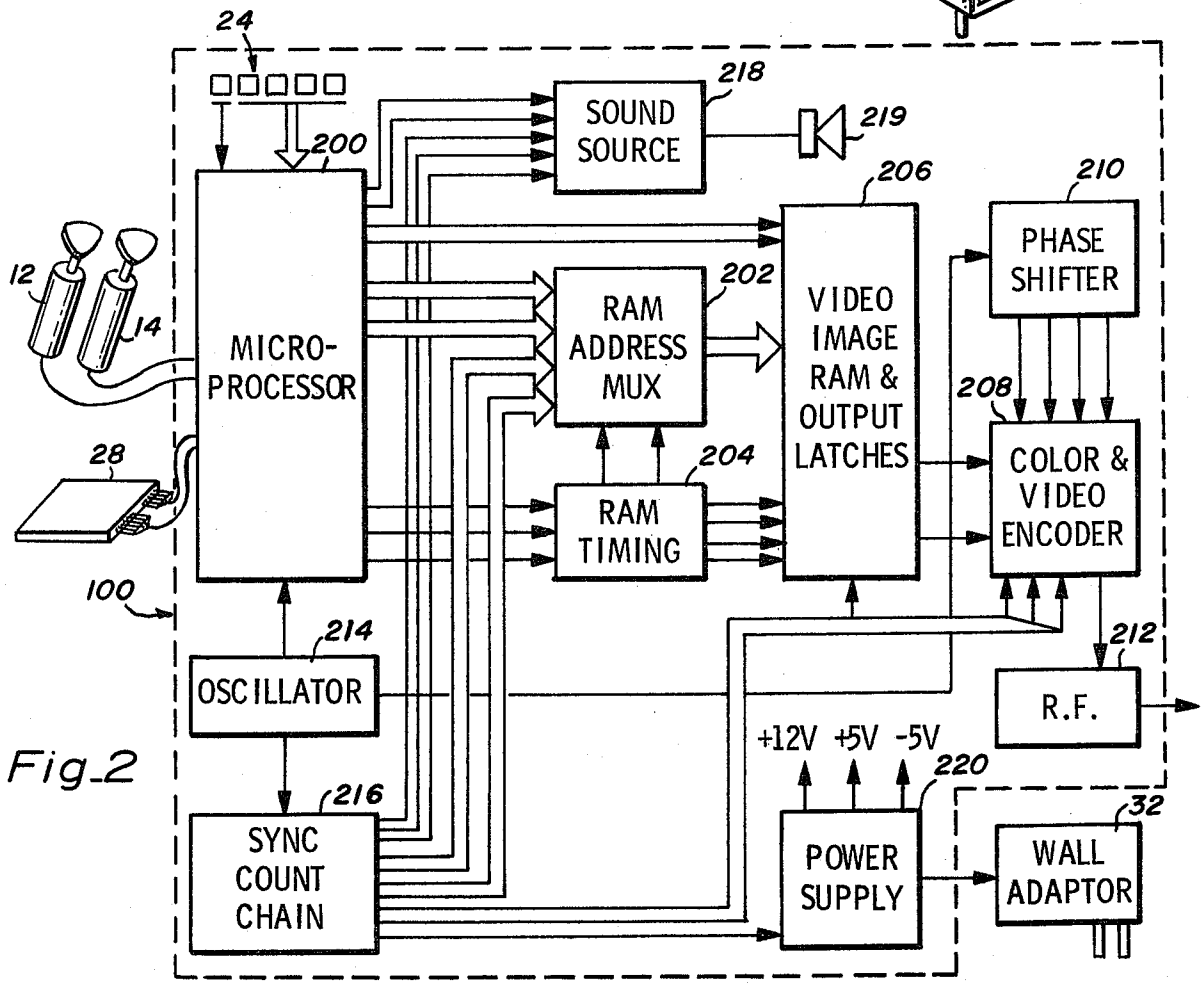
24
200
218
SOUND SOURCE
219
206
210
PHASE SHIFTER
12
14
MICRO-PROCESSOR
202
RAM ADDRESS MUX
VIDEO IMAGE RAM & OUTPUT LATCHES
208
28
204
RAM TIMING
COLOR & VIDEO ENCODER
100
214
212
OSCILLATOR
R.F.
+12V +5V -5V
220
216
32
SYNC COUNT CHAIN
POWER SUPPLY
WALL ADAPTOR

Fig_2

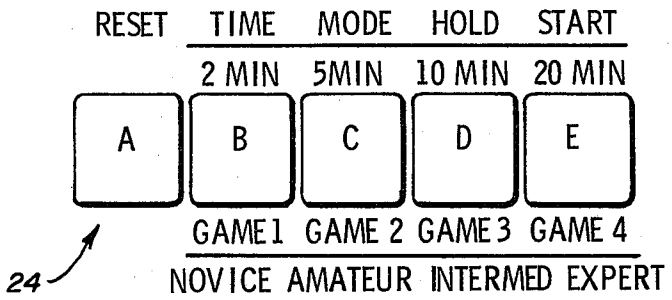

Fig_3

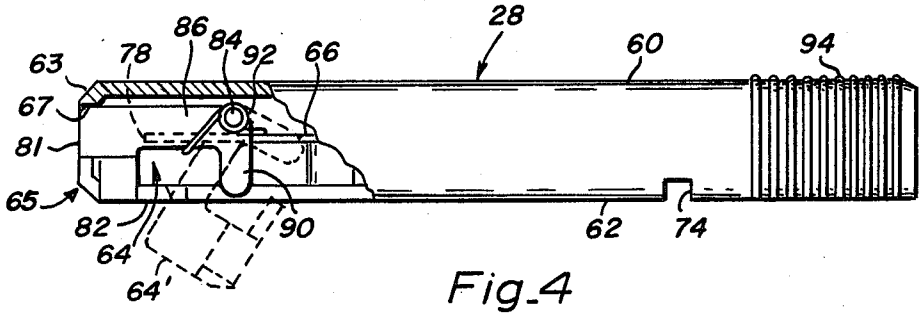

Fig_4

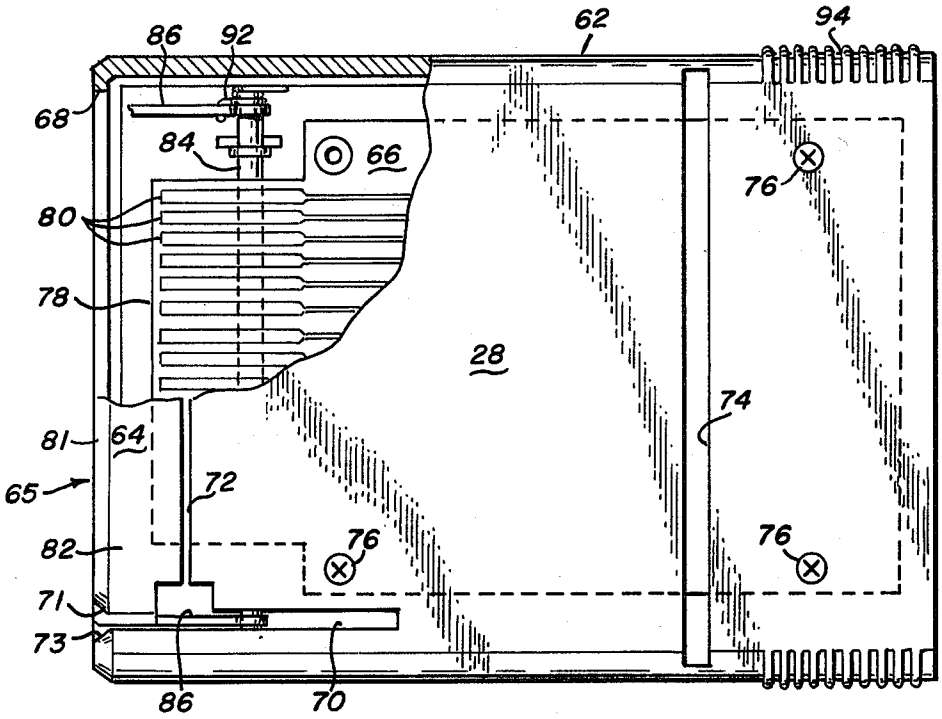

Fig_5

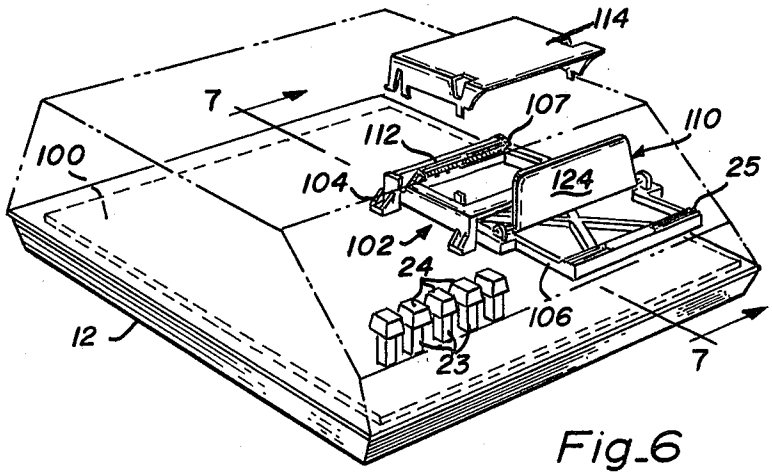

Fig_6

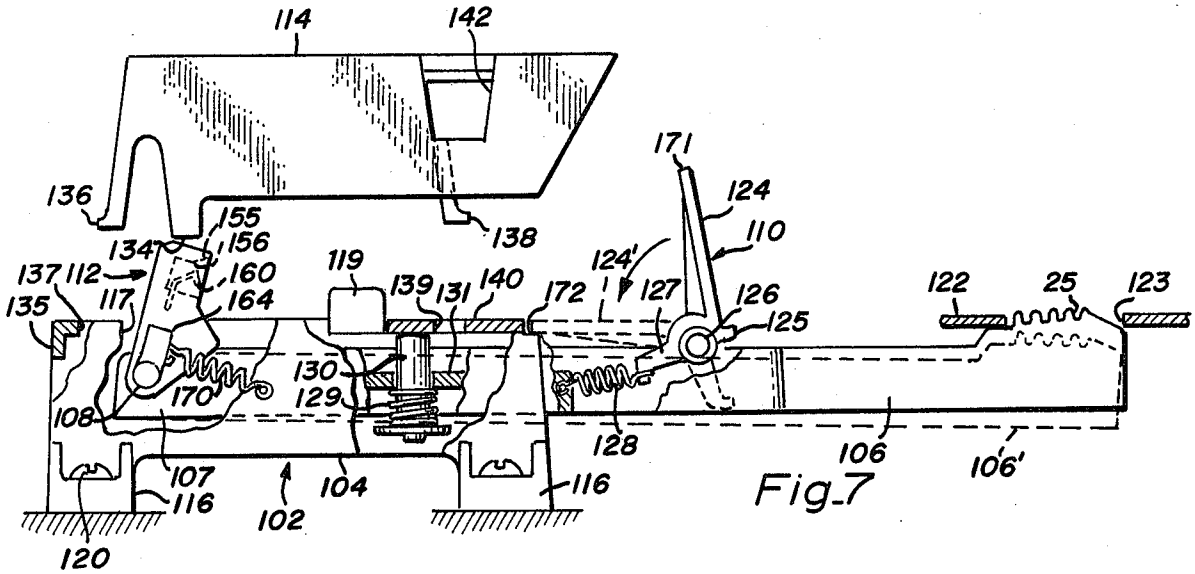

Fig_7

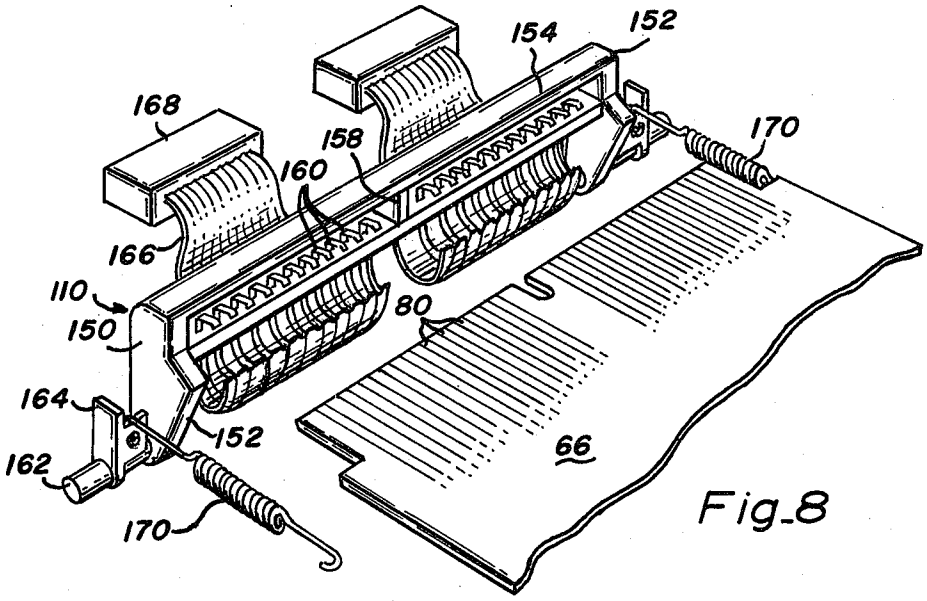

Fig_8

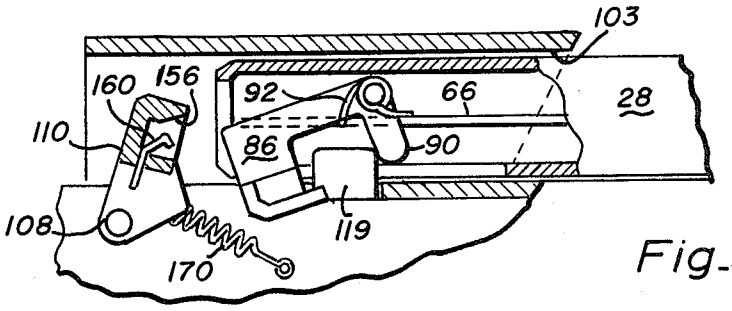

Fig_9

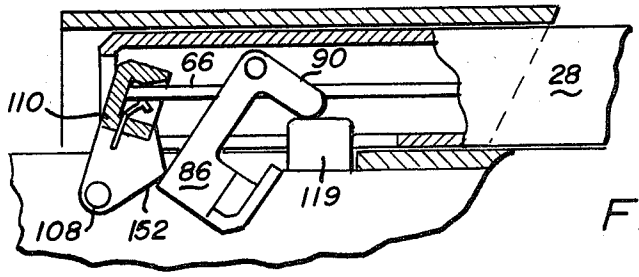

Fig_10

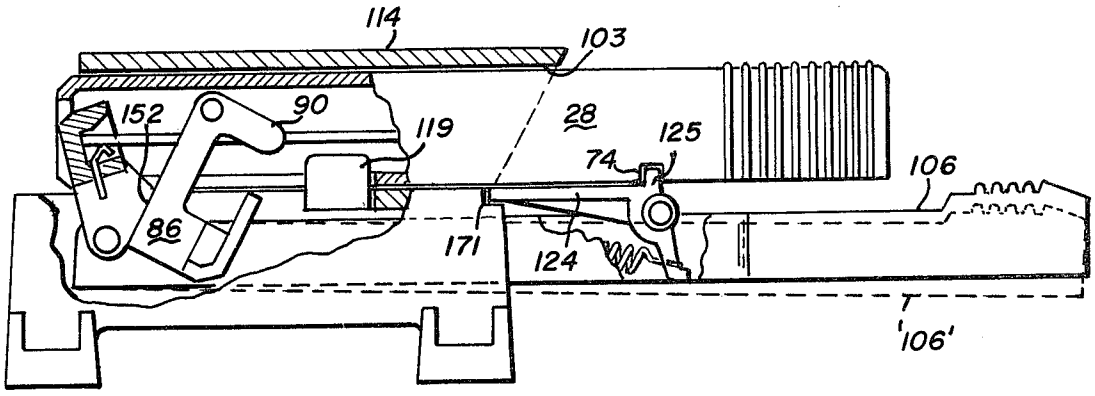

Fig_11

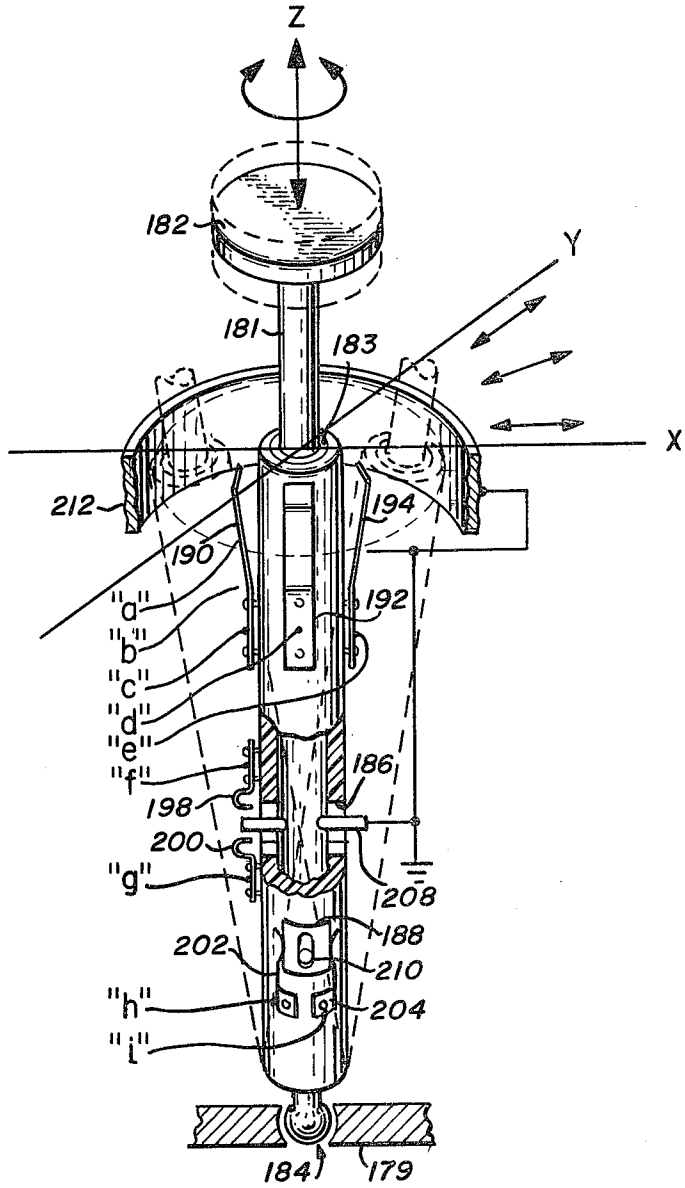
Z
182
Y
181
183
X
212
194
190
192
"a"
"b"
"c"
"d"
"e"
"f"
186
198
200
"g"
208
188
202
210
"h"
204
"i"
184
179

Fig. 12

CARTRIDGE PROGRAMMABLE VIDEO GAME APPARATUS

BACKGROUND OF THE INVENTION

1. Field of the Invention

The present invention relates generally to video game apparatus and, more particularly, to a self-contained video signal generating device for use in association with a standard black-and-white or color television set and which includes preprogrammed data relating to several selectible games as well as means for receiving a preprogrammed cartridge containing other data that may be selected to provide additional game play.

2. Description of the Prior Art

Self-contained home entertainment video modules of the prior art have typically been restricted to only a few games having only the most elementary player interaction in terms of freedom of movement of game balls, paddles and other movable game objects. This, of course, means that once a purchase is made of a particular console having certain available game selection, no new game can be added, and one must purchase an entirely new console if he wishes to play additional games. Moreover, prior art devices have typically limited player control to two or three directions of object movement or function, thereby reducing the possibility of providing play action closely simulating actual real life action.

SUMMARY OF THE PRESENT INVENTION

It is therefore a principal object of the present invention to provide a video game apparatus for use in association with standard television receivers which permits a high degree of interaction between player and electronics and which enables a player to select from a multiplicity of various games.

Another object of the present invention is to provide a video game apparatus which can be selectively programmed, through the use of interchangeable preprogrammed electronics containing cartridges or the like, to include data relating to a large plurality of various games.

Still another object of the present invention is to provide a video game apparatus including player control devices which enable numerous displayed object movements and actions to be controlled by the players.

A still further object of the present invention is to provide a video game apparatus having an improved electrical connector assembly which reduces the force required to mate a cartridge-contained printed circuit board with console-contained electrical contacts.

Yet another object of the present invention is to provide a video game apparatus having means for enabling a relatively large number of game play parameters to be selected.

Briefly, the present invention includes a console containing the operative video signal generating and control electronics of the system, a plurality of push button switches which enable game mode, time, and other parameter selection inputs to be made to the electronics, and novel printed circuit board connector hardware; additional game data containing cartridges which mate with the connector hardware and enable any of a large number of games to be selectively programmed into the apparatus; and a pair of hand controller devices which provide active player interface to the electronics.

An important advantage of the present invention is that it utilizes the most modern electronics components and data handling techniques to enable a high degree of interaction between player and game controlling electronics.

Another advantage of the present invention is that it includes improved printed circuit board connector hardware which makes it possible to easily engage and disengage a cartridge containing printed circuit board mounted electronic components and circuitry.

These and other advantages of the present invention will no doubt become apparent to those skilled in the art after having read the following detailed description of a preferred embodiment which is illustrated in the several figures of the drawing.

IN THE DRAWING

FIG. **1** is a perspective view generally illustrating the various component parts of a video game apparatus in accordance with the present invention;

FIG. **2** is a block diagram schematically illustrating the principal components of the video signal generating and control electronics utilized in the embodiment illustrated in FIG. **1**;

FIG. **3** is a diagram illustrating the functional labeling of the parameter selection buttons of the embodiment illustrated in FIGS. **1** and **2**;

FIGS. **4** and **5** are partially broken side and bottom views, respectively, of the cassette illustrated in FIG. **1**;

FIG. **6** is a partically exploded perspective view illustrating the push button switches and cartridge-receiving chute of the embodiment shown in FIG. **1**;

FIG. **7** is a partially broken side view of the cartridge-receiving chute shown in FIG. **6**;

FIG. **8** is a perspective illustration showing the connector assembly of the cartridge-receiving chute illustrated in FIGS. **6** and **7**;

FIGS. **9**, **10** and **11** are partially broken side views sequentially illustrating mating action between cartridge and chute connector assembly in accordance with the present invention; and

FIG. **12** is a partially broken pictorial illustration of the operative components of the hand controller illustrated in FIG. **1**.

DETAILED DESCRIPTION OF THE PREFERRED EMBODIMENT

Referring now to FIG. **1** of the drawing, there is shown a video game device in accordance with the present invention. The device includes a console **10** made of molded plastic aesthetically designed to complement most television sets or decorative shelves when mounted thereupon, a molded plastic dust cover **11** and a pair of hand-held controller units **12** and **14**. Console **10** has an outer housing comprised of a molded base **15** and a molded top **16**. The dust cover **11** is shown raised above the top **16** to reveal a storage compartment **18** for storing the hand controllers **12** and **14** when they are not in use. The front of console **10** is stepped as illustrated at **20** to provide a control panel including a horizontal surface **22** having openings on the left side for five game and parameter selection buttons **24** to extend through and an opening on the right side for a cartridge eject bar **25** (see FIG. **7**) to extend into. The vertical wall of the stepped front is provided with an opening **26** on the right side for receiving a cartridge **28**. The cartridge **28** includes preprogrammed electronics which cooperate with the permanent electronics of the console

to enable games other than those contained in the console circuitry to be played.

Attached to the rear of console **10** is a power cord **30** having a standard line voltage AC to low voltage AC adaptor **32** affixed to its end. The use of the remote adaptor conserves space and weight in the console housing and serves as a safety feature in that no line voltages are present in the console.

Game, play period and play mode selection input is made through buttons **24**, as explained below, while player control input to console **10** is made through the pair of hand controller units **12** and **14** which are each connected to the console electronics through the rear of the console by a nine conductor cable **34**. As will also be described in more detail below, the hand controllers each include a hand-grip configured body portion **40** and a movable "joy stick" with control knob **42**, and enable a multiplicity of active control inputs to be made to the electronics of console **10**. The video output from console **10** is coupled into the antenna lead terminals of a standard black-and-white or color television set, shown at **44**, through a two-position switch **46**. The switch **46** has a manually operable selector **48** that enables signals input to the television set to be selected from either an external antenna **50** or the video game signal input lead **52**.

Referring now to FIG. **2** of the drawing, there is shown a block diagram schematically illustrating the principal operative components of the electronics contained within console **10**. These components are contained on a single printed circuit board illustrated by the dashed lines **100** and include a microprocessor **200**, a RAM address multiplexer **202**, a RAM timing circuit **204**, a video image RAM and output latch circuit **206**, a color and video encoder **208**, a phase shifting circuit **210**, an RF modulator **212**, an oscillator **214**, a sync count chain **216**, and a sound generator **218**. Also included is a power supply **220** which receives a low voltage AC signal from the wall adaptor **32** and converts it to the DC voltages required to drive the various circuit components.

As previously indicated and explained further below, game selection inputs are entered through the selection buttons **24**, player control inputs are made through the hand controllers **12** and **14**, and interchangeable game capability is provided by means of the cartridge **28**.

In the preferred embodiment, the microprocessor is comprised of a Fairchild F8 3850 central processing unit (CPU) and two F8 3851 program storage units (PSU) with each of the PSUs containing **1024** bytes of the program. This enables the console to permanently contain data relative to at least two games which, in the preferred embodiment, are similar to hockey and tennis. The cartridge **28** contains additional PSUs which add to the storage capability of the microprocessor and thus enable additional game and control data to effectively be included in the microprocessor **200**.

Communication between the microprocessor **200** and the game selection and control means, and between the microprocessor **200** and the video image RAM **206** is accomplished through the I/O ports of the CPU and the I/O ports of one of the PSUs. The clock signal used to drive the microprocessor has a frequency of 1.8 MHz and is derived from a 3.58 MHz signal generated by oscillator **214**.

The video image RAM **206** is comprised of four 4K dynamic RAMs which are arranged 128 bits wide by 65 bits high by 2 bits deep so as to correspond to a video screen display comprising 65 horizontal rows of dots with each row containing 128 dots. Two bits are used to define the color of each dot. Timing for Ram **206** is derived from the video sync count chain **216**, and writing into the RAM is accomplished after microprocessor **200** has set up the address and data and has issued a write request. However, the actual writing operation is controlled by the sync count chain. Writing occurs during each horizontal retrace with each retrace normally occurring once every 63 microseconds. Only two bits (corresponding to one dot) are written during each write operation. The address for the RAMs during writing is taken from microprocessor **200**, substituting for the sync count chain address that is used during the read operation.

The sync count chain **216** includes a horizontal counter, a vertical counter, a divide-by-7/4 means, a divide-by-4 means, a dot clock filter, and a sync decode circuit. A 7/4 division of the 3.5 MHz signal from oscillator **214** is fed into the horizontal counter to generate a 128-bit horizontal video signal, and is further divided by 4 and fed into the vertical counter to generate a 65-line vertical video signal. Both of these signals are fed into the sync decoder to generate blank, sync, and burst signals. The dot clock pulses are taken at the output of the dot clock filter.

In accordance with the present invention, the colors developed on the television screen are determined by foreground and background bits which are extracted from the microprocessor's memory by the sync count chain and are passed to the video encoder **208** via the output latches of circuit **206**. "Background" is defined to mean the painting of stripes horizontally all the way across the screen. The four possible background colors are black, blue, green or gray/white. However, the whole screen need not be painted in one background color. For instance, in the tennis game of the present invention, a green background is combined with a black background in the score area. "Foreground" is defined as meaning all that is not background; that is, court outlines, obstacles, scores, players, vehicles, balls and the like, are foreground objects and may have one of four possible foreground colors; namely, green, red, blue and sometimes white. White is a valid foreground color only if the background is black, and is the only color available against a black background. The various color bits are held in the shift registers of circuit **206** until shifted out by the dot clock input from the sync count chain **216**.

The color and video encoder **208** accepts both the foreground and background bits, processes them to decide the color of the current dot cell and finally, assigns the proper value of luminance and chrominance. The color signals ultimately selected by encoder **208** are developed by phase shifter **210** and are designated burst, blue, green, and red signals. The burst signal has a frequency of 3.58 MHz and is derived from the output of oscillator **214**. The blue signal is derived by inverting the burst signal; the red signal is derived by shifting the phase of the burst signal by 90°; and the green signal is derived by inverting the red signal. After encoding, the video signal is fed to the RF modulator **212** wherein the signals are amplitude modulated on a carrier corresponding to a particular television channel which, in the present embodiment, is at the frequency of channel **3**.

In response to an input from microprocessor **200**, the sound source **218** is capable of generating three-tone signals from inputs taken from the vertical sync genera-

tor. These tone signals are fed to a speaker **219** which renders them audible.

To generally summarize the operation of the circuit, it can be said that the microprocessor **200** takes the players' game selection and parameter selection inputs, via push buttons **24**, along with player command inputs which are input via hand controllers **12** and **14**, and turns these inputs into data which corresponds to a particular video image. This data is then transmitted to the video RAM **206** for temporary storage. The sync count chain **216** subsequently scans through the video image RAM using the same type of raster scan used by the television set and extracts pairs of bits from the memory of **206** and supplies them to the color and video encoder **208**. The encoder in turn interprets each pair of bits, assigns them a luminance level and a chroma phase, and generates a composite video signal which is passed to the RF modulator **212** where such signal is used to amplitude modulate a high frequency carrier. The output of the modulator is a low level signal which is connected directly to the television antenna terminals through the switch **46**.

In FIG. **3** the five buttons **24** are illustrated along with labels indicating the corresponding inputs selected by depressing the buttons during the selection sequence. Play is initiated by first pressing the reset button "A." This starts the logic sequence and causes a large "G" and a question mark to be displayed on the television tube to, in effect, request that one of four games be selected. These may be four games internally contained in console **10** or four games contained in an inserted cartridge. The players select the desired game by depressing one of the buttons "B," "C," "D" or "E." After making such selection, a large "S" and a question mark are displayed on the screen to, in effect, request whether or not the players are ready to start. If they are ready to start, they will depress the start button "E" and the game play will begin and continue for a duration of two minutes in the novice mode. However, should they not elect to play for the minimum time and in the low skill level mode, they may elect either a different time or a different mode, or both, by depressing either the time button "B" or the mode button "C."

Assuming button "B" is depressed, a large "T" will be displayed along with a question mark and the players can select any of the four indicated play times by depressing one of the buttons "B–E." Once one of these buttons is depressed, a large "S" and a question mark will again be displayed requesting whether or not the players are ready to start. If so, they will depress the start button "E" and the game will begin. If not, they can depress the mode button "C" and cause a large M and a question mark to be displayed to, in effect, request that they select either the novice, amateur, intermediate or expert mode by depressing one of the buttons "B–E." Having pressed one of these buttons, the large "S" and question mark will again be displayed, and if the start button "E" is thereafter depressed, the game will begin and continue until the selected time interval has expired. Thereafter, until the end of the game, all player inputs to the device are made through the hand controllers **12** and **14**, and no further attention need be paid to the buttons **24**.

However, if during the play period the players should wish to interrupt the game temporarily, they can depress the hold button "D" and cause all action in the game to be suspended. When they are ready to resume play, they need only depress the start button "E" and play will resume where it left off. Should they wish to quit playing before the selected period has expired, they may simply press the reset button to end the game and the game selection sequence will then have to be reinitiated in order to start a new game. Although this particular set of logical decisions is included in the present embodiment, it will of course be appreciated that any other desired input instructions could be incorporated as well.

The principal structural features of cartridge **28** are illustrated in the partially broken, side and bottom views shown in FIGS. **4** and **5**, respectively. As illustrated, the cartridge **28** is comprised of a two-part outer housing including mating upper and lower parts **60** and **62**, a pivotable cartridge door assembly **64**, and an enclosed printed circuit (PC) board **66**. In the preferred embodiment, the PC board **66** includes two PSUs, each programmed to contain 1024 bits of data. The end **63** of cartridge top **60** has a rectangular cut-out, as indicated by the edges **67** and **68** shown in FIGS. **4** and **5**, respectively, to mate with the door assembly **64**. Cartridge bottom **62** includes a pair of longitudinally extending guide slots, one of which is shown at **70**, and is also cut back as indicated at **72** to mate with door assembly **64**. A cartridge-locking groove **74** extends across bottom **62** to lock the cartridge in the cartridge-receiving chute of console **10** as will be described below.

Top **60** and bottom **62** are fastened together by four screws **76** which locate and secure the electronics containing PC board **66** between the cartridge shells. As indicated in FIG. **5**, circuit board **66** has a contact end portion **78** with a plurality of contact ribbons **80** formed in parallel along the bottom surface thereof. The end portion **78** is positioned so as to be located immediately behind door assembly **64** for reasons which will follow.

In the preferred embodiment door assembly **64** is comprised of a single, molded unit which includes a two-sided closure **65** having an end portion **81** and a bottom portion **82**, a pivot shaft **84**, and a pair of generally L-shaped members **86**. One leg of each member **86** connects shaft **84** to the closure **65**, and the second leg **90** serves as a cam follower which upon engaging a cam causes the closure assembly to pivot into the position illustrated by the dashed lines **64'** in FIG. **4**. A pair of torsion springs **92** are disposed one at either end of shaft **84** and each have one end-engaging member **86**, and the other end engaging the cartridge housing so as to apply a torsional force to the closure assembly causing it to be normally biased into its closed position.

An external design feature of the cartridge **28** is the provision of gripping ribs **94** formed at the end opposite the closure end. In addition to providing a decorative effect, the ribs **94** also provide a gripping surface to facilitate positioning of the cartridge in the console.

Turning to FIG. **6** of the drawing, the console base **15** is shown with top **16** removed but outlined in phantom so as to illustrate the positioning of the main PC board **100** which is also shown in phantom. As illustrated, five push button switches **23** including the buttons **24** are mounted to circuit board **100**. These switches are electrically connected to the microprocessor **200** as indicated in FIG. **2**. A cartridge-receiving chute and connector assembly is shown generally at **102**.

Referring now additionally to FIG. **7** of the drawing, which is a partially broken side view taken along the line 7—7 of FIG. **6**, it will be noted that assembly **102** includes a four-legged platform **104**, a cartridge retainer/ejector assembly including a member **106** pivotally

attached to platform **104** at **108** and having a closure assembly **110** affixed thereto, a connector bar **112** which is also pivotally connected to platform **104** at **108**, and a cover **114**.

The platform **104** is a generally rectangular structure which is open at the top and has four standoff legs **116** that rest upon circuit board **100** and serve to locate the chute assembly in its proper position relative to console opening **26**. Each side of member **104** is provided with a generally V-shaped cutout **117** having a rounded bottom forming a bearing surface for shaft **108**. A pair of upstanding camming tabs **119** are also provided on top of platform **104** to serve as cartridge centering, stopping, and door opening cams as will be explained below. Platform **104** is secured to circuit board **100** by means of suitable screws or bolts **120**.

As illustrated in FIG. **6**, member **106** is comprised of elongated, cross-webbed structure having two longitudinal legs **107** (FIG. **7**) pivotally attached at one end to platform **104** and their other ends terminating in an integrally formed, transversely extending ejector bar **25**. Ejector bar **25** is provided with a raised and ribbed upper surface which is designed to extend through a corresponding opening **123** in console surface **22**. Member **106** is rotatable about shaft **108** into the position indicated by the dashed lines **106'** but is normally biased into the position illustrated in FIG. **7** by a coil spring **129** which is positioned about a post **130** that extends downwardly from the top of platform **104**. Spring **129** exerts an upward force on a cross web **131** which is an integrally formed part of member **106**. Closure assembly **110** includes an elongated door **124** (FIG. **6**) having an outwardly extending detent rib **125** formed along its lower edge, a shaft **126** formed along its lower edge opposite rib **125**, and a lever arm **127** formed in the center of shaft **126**. All of these parts are integrally molded in a single piece. Assembly **110** is pivotally affixed to member **106** by springing the side legs **107** outwardly and inserting the ends of shaft **126** into bearing openings formed therein. Door assembly **110** is resiliently biased into the illustrated upstanding position by a spring **128** which has one end attached to the lever **127** and the other end attached to member **106**.

Member **106** combines with closure assembly **110** to provide a latching mechanism for holding a cartridge in place once it has been fully inserted into the console and engaged with connector **112**. This latching action is effected by detent **125** mating with the groove **74** (see FIGS. **4** and **5**) of a cartridge as will be more fully explained below.

Top **114** is a unitary, molded cover member which also serves as a top guide for an inserted cartridge. Top **114** also functions to provide a top bearing surface **134** which holds the shaft **108** in the bottom bearing surface of **117**. Top **114** is held in position on platform **104** by means of a pair of integrally formed resilient locking tabs **136** and a pair of relatively rigid tabs **138**. In order to mount top **114** to platform **104**, tabs **136** are positioned under the lip **137** of a platform cross member **135**, with the bearing surface **134** resting on shaft **108**, and the cover is forced leftwardly as depicted in FIG. **7** deflecting tabs **136** until tabs **138** can be inserted into apertures **139** in the top of member **104**. Once the toes of tabs **138** have moved beneath cross member **140**, the leftward pressure can be released and the top will spring into the locked position. The openings **142** are provided for mold relief.

The connector assembly **112** is illustrated in further detail in FIG. **8** and includes a pair of end portions **150** having front facing camming surfaces **152** and an elongated central portion **154** forming a connector slot **156** which is divided into two sections by an alignment key **158**. As shown by the dashed lines in FIG. **7**, the front inside top edge **155** of portion **154** is chamferred to provide ease of entry for a cartridge PC board into slot **154**. A plurality of upstanding resilient contact members **160** extend upwardly through the bottom of central portion **154** and into the slot **156**. As will be explained more fully below, the contact members **160** are positioned below the level of the bottom surface of a cartridge PC board so that they provide no interference to its entry into the slot. Extending outwardly from the lower portion of each end member **150** is a shaft segment **162** having an upstanding biasing web **164** affixed thereto.

The conductors of a pair of ribbon leads **166** have one end connected to various ones of the contact members **160** and the other end connected to a terminal of suitable jacks or plugs **168**. The connector assembly is resiliently biased into the position illustrated in FIG. **7** by tension springs **170** which have one end affixed to the webs **164** and the opposite end affixed to a wall of member **106**.

Referring now additionally to FIGS. **9**, **10** and **11**, the cartridge insertion and connecting operation will be described. Note that connector assembly **110** is shown in FIGS. **9** and **10** in its cartridge engaging position while in FIG. **11** it is shown in its cartridge connecting position. Having selected a particular cartridge for play, the closure carrying end of the cartridge is inserted into the opening **26** (FIG. **1**) causing the door **124** to be rotated downwardly into the position indicated by the dashed lines **124'** (FIG. **7**) and out of the way with its edge **171** seated in a recessed edge **172** of platform **104**. The cartridge is then pushed further into the receiving chute until the chamferred surfaces **71** and **73** (FIG. **5**) at the opening ends of slots **70** engage the alignment tabs **119** and cause the slots **70** to track therealong. The cartridge is then further moved into the chute until eventually the arms **90** of assembly **64** engage the front side of tabs **119** and in camming thereover cause the closure member **64** to start rotating downwardly as illustrated in FIG. **9**.

As the cartridge continues to move leftwardly into the position illustrated in FIG. **10**, the top of members **86** will engage the camming faces **152** of connector ends **150** and lift legs **90** out of engagement with tabs **119**. Further leftward movement of cartridge **28** and engagement of connector assembly **110** by circuit board **66** causes connector assembly **110** to rotate into the cartridge-connecting position illustrated in FIG. **11**. Since the horizontal clearance between the upper surface of slot **156** and the uppermost surface of contacts **160** is slightly greater than the thickness of the contact strip edge portion of circuit board **66**, very little resistance to movement of the board into slot **156** will be encountered. However, as the contactor is caused to rotate rearwardly about its shaft **108**, a substantial wiping action of contact against contact strip and an increase in contact pressure will nevertheless be effected so as to adequately pierce any oxide build-up on the contact strips or contacts themselves and thus provide good electrical contact.

Even though the actual contact force between contact and contact strip is quite high due to the multi-

plicity of contacts made, the forces required to make the contact are only partially reflected into the translational force which must be applied by the player to fully seat the cartridge in the connector. In fact, the principal forces that must be overcome in loading a cartridge into the console are only those attributed to resisting the connector return springs **170** and the cartridge door closure springs **92** (FIG. **5**).

Note that during the movement of cartridge **28** into the receiving chute, engagement with the bottom surface **103** of top **114** causes the bottom of cartridge **28** to exert a downward force on detent **125** thereby causing the ejector assembly **106** to be deflected downwardly to assume the position illustrated by the dashed lines **106'** until such time as the slot **74** becomes aligned with the detent **125**. At such time ejector assembly **106** will rotate back into its upper position with detent **125** locking cartridge **28** in place. The cartridge is at this point fully inserted and any game contained therein may be selected by depressing the proper combination of buttons **24**. When the player later decides to eject the cartridge **28**, he will merely apply downward pressure upon the ejector bar **25** to cause the assembly **106** to rotate back into the position illustrated by the dashed lines **106'** and thereby cause detent **125** to be withdrawn from slot **74**. Since there is at this time no force applied to cartridge **28** tending to overcome the spring forces of connector springs **170** and closure springs **92** (FIG. **9**), the forces exerted by those springs will cause the cartridge to be moved a short distance rightwardly so that detent **125** will no longer engage slot **74** and the cartridge may then be pulled out of opening **26** to be replaced by another cartridge if desired.

In FIG. **12** of the drawing, a functional representation of the principal operative components of the hand controllers **12** and **14** is schematically illustrated. For simplicity of illustration, no representation of the outer housing is made other than that representing the pivot structure **179**. In addition to the outer housing (see FIG. **1**), the principal components of each hand controller are an elongated tubular member **180**, an elongated shaft **181**, a knob **182**, and various electrical switching means. Member **180** is of a nonconductive material and has an axial bore **183** extending longitudinally therealong for substantially its entire length. The lowermost end of member **180** is pivotally attached to the housing as schematically illustrated at **184**. Member **180** is also provided with a pair of apertures **186** and **188** passing transversely therethrough.

Attached to the outer surface of the upper portion of member **180** are four electrical contact strips **190**, **192**, **194** and **196** (not shown). A pair of contacts **198** and **200** are respectively affixed above and below aperture **186**, and a second pair of contacts **202** and **204** are respectively affixed to member **180** on each side of the opening **188**. One end of the nonconductive shaft **181** extends into bore **183** and the handle **182** is affixed to the other end thereof. A pair of conductive contact rods **208** and **210** extend transversely through shaft **181** and are carried thereby in alignment with the centers of apertures **186** and **188**, respectively.

Suitable spring means (not shown) are also provided for normally biasing member **180** into the central positions illustrated and for normally biasing shaft **206** into a position such that the rods **208** and **210** are centered within the respective apertures **186** and **188**. Such means must, however, be resilient enough to allow shaft **181** to be rotated slightly about the Z axis so that rod **210** can engage contacts **202** and **204**, and must likewise be capable of allowing shaft **181** to move axially up and down far enough to engage contacts **198** and **200**.

A conductive band **212** which is carried by the controller housing circumscribes the upper portion of member **180** to provide a ground ring that may be engaged by the contacts **190–196** when member **180** is tilted about the pivot **184**.

As was mentioned above, electrical communication between the hand controllers and the console electronics is made through a pair of nine conductor cables including the conductors labeled "*a*"–"*i*" in FIG. **12**. The ground lead line "*a*" is connected to ground ring **212** as well as to contact rods **208** and **210** which are internally shorted together. Lead lines "*b*"–"*e*" are respectively connected to the contact strips **190–196**, and lead lines "*f*"–"*i*" are respectively connected to the contactors **198–204**.

A tilting of member **180** in any direction in the X-Y plane will cause one or two of the contacts **190–196** to be shorted to ground thereby allowing a corresponding control function to be effected by electrical circuitry responsive thereto. Similarly, a rotation of the handle **182** about the Z axis will, depending upon the direction of rotation, cause either the contact **202** or the contact **204** to be shorted to ground. An upward motion of handle **182** along the Z axis will cause contact **198** to be shorted to ground, and similarly, a downward motion will cause contact **200** to be shorted to ground.

It will thus be appreciated that as many as eight separate control switching functions can be initiated using the present device. It is to be understood that by logically combining the electronics responsive to two or more of the hand controller switches, additional control functions can also be implemented. However, in the preferred embodiment, the eight switching functions interface directly to the I/O port of the microprocessor wherein closing of any of the various switches causes corresponding I/O port pins to be pulled to ground. The software contained within the microprocessor is designed to interpret the switch closures in a manner so as to eliminate the mechanical intermittancy which normally occurs due to contact bounce. This feature makes possible the use of simple manually operable switches such as those illustrated and thus eliminates the need for the potentiometer type of joy stick control which is common in the prior art.

Although a particular type of hand controller is suggested by the embodiment of FIG. **12**, it is contemplated that other types of controllers could also be used to provide the desired control inputs.

The present invention has been described above with respect to a particular preferred embodiment. It is, however, contemplated that numerous alterations and modifications will be apparent to those skilled in the art after having read the above disclosure, and it is therefore intended that the following claims be interpreted as covering all such alterations and modifications as fall within the true spirit and scope of the invention.

What is claimed is:

1. Video game apparatus comprising:

player control means for developing play control signals;

cartridge means including data storage means containing auxiliary video signal generating information, said cartridge means including an outer housing having a locking recess therein and a printed circuit board having electronic components

mounted thereto, said outer housing enclosing said circuit board and said electronic components forming said data storage means; and

console means including;

a plurality of parameter selection switches for developing play parameter signals,

chute means for receiving said cartridge means and having connector means for providing electrical connection to said data storage means, said chute means including a locking means having a detent for engaging said locking recess of said cartridge means to hold said cartridge means in a received position, and

video signal generating means including microprocessor means for processing video signal generating information including said auxiliary information, said generating means being responsive to said play parameter signals and said play control signals and operative to generate video signals suitable for input to the antenna terminals of a standard television set to cause the television set to develop visual images corresponding to said video signals.

2. Video game apparatus as recited in claim **1** wherein said player control means includes at least one signal developing device having a plurality of switches that may be selectively opened and closed to develop said play control signals.

3. Video game apparatus as recited in claim **2** wherein said signal developing device includes a housing and a control element which is movable relative to said housing, said element being operative to open and close various ones of said switches depending upon its position relative to said housing.

4. Video game apparatus as recited in claim **1** wherein said outer housing is generally rectangular and has an opening along one side to permit electrical connection to said printed circuit board and wherein said cartridge means further includes closure means for closing said opening when no electrical connection is to be made to said printed circuit board.

5. Video game apparatus as recited in claim **4** wherein said closure means includes a door which is pivotally attached to said outer housing and opening means for rotating said door into an open position when said cartridge means is received within said chute means.

6. Video game apparatus as recited in claim **5** wherein said chute means includes cam means and wherein said opening means includes a cam follower affixed to said door and positioned so as to engage and follow said cam means and thereby rotate said door into the open position as said cartridge means is received within said chute means.

7. Video game apparatus as recited in claim **6** wherein said cam means includes an up-standing tab and said outer housing includes a slot for receiving said tab, said tab and said slot cooperating to align said cartridge means relative to said chute means.

8. Video game apparatus as recited in claim **1** wherein said printed circuit board includes an edge portion having a plurality of terminal strips, and wherein said connector means includes a plurality of resilient contact elements pivotally mounted relative to said chute means and means for rotating said contact elements into engagement with said terminal strips as said cartridge means is received within said chute means.

9. Video game apparatus as recited in claim **8** wherein said connector means includes an elongated body forming a connector slot for receiving said edge portion, said contact elements being secured to said body and extending into said slot, said connector means further including pivot means affixed to said body for pivotally mounting said body relative to said console means, said body being rotatable about said pivot means between a cartridge-engaging position and a cartridge-connecting position.

10. Video game apparatus as recited in claim **9** wherein said connector means further includes resilient means for normally biasing said body into said cartridge-engaging position.

11. Video game apparatus as recited in claim **1** wherein said console means further includes a console housing for enclosing said switches, said chute means and said generating means, and said chute means includes a platform attached to said console housing, and wherein said locking means includes an elongated ejector means pivotally attached to said platform and rotatable between a locking position and an unlocking position and means for resiliently biasing said ejector means into said locking position.

* * * * *