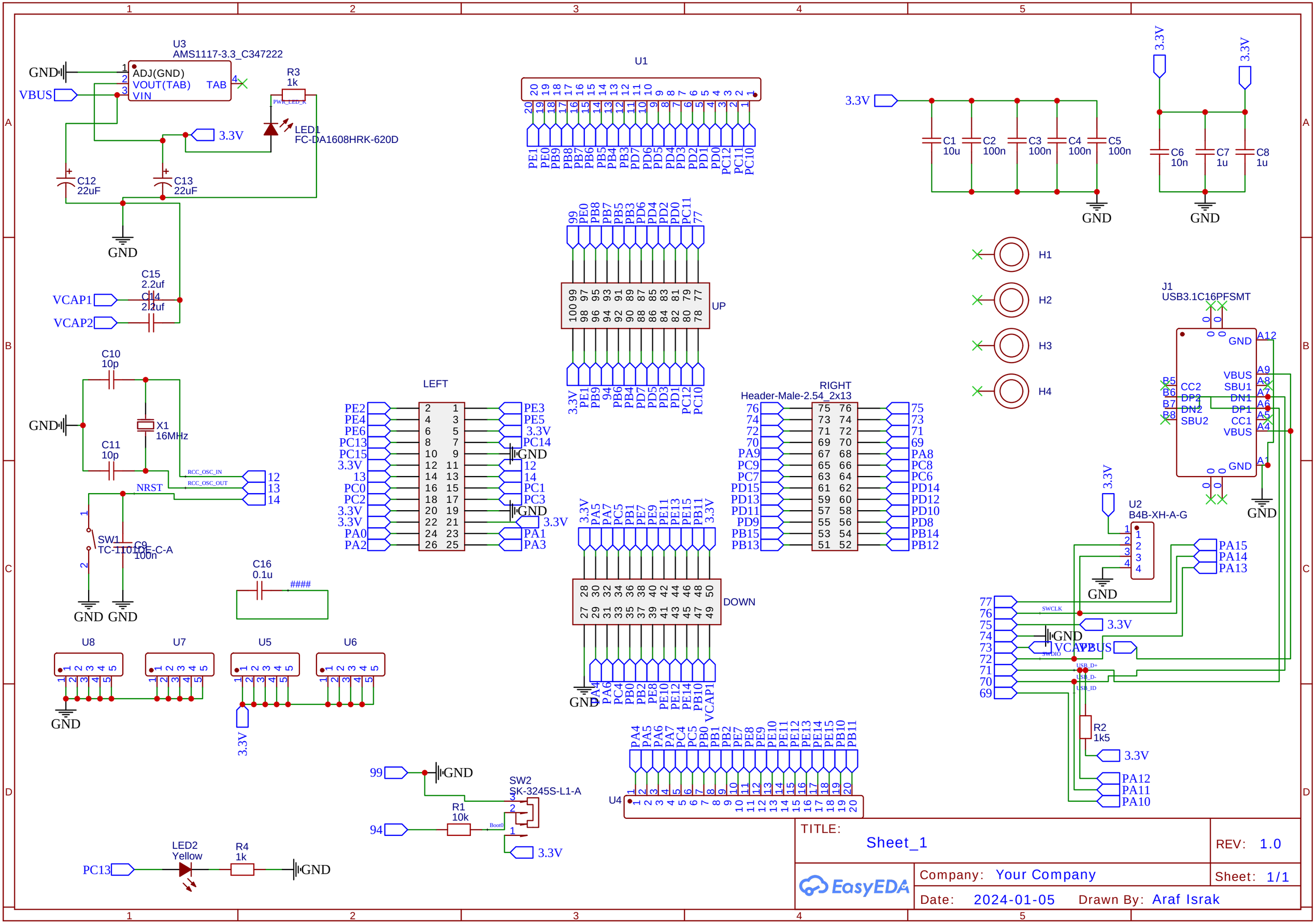
U3
AMS1117-3.3_C347222
ADJ(GND)
VOUT(TAB)
VIN
TAB
GND
VBUS
R3
1k
LED1
FC-DA1608HRK-620D
3.3V
C12
22uF
C13
22uF
C15
2.2uf
C14
2.2uf
VCAP1
VCAP2
C10
10p
C11
10p
X1
16MHz
NRST
SW1
TC-1101DE-C-A
C9
100n
C16
0.1u
U1
UP
LEFT
RIGHT
Header-Male-2.54_2x13
DOWN
U4
U8
U7
U5
U6
SW2
SK-3245S-L1-A
R1
10k
LED2
Yellow
R4
1k
PC13
C1
10u
C2
100n
C3
100n
C4
100n
C5
100n
C6
10n
C7
1u
C8
1u
H1
H2
H3
H4
J1
USB3.1C16PFSMT
U2
B4B-XH-A-G
R2
1k5
PA15
PA14
PA13
PA12
PA11
PA10
TITLE:
Sheet_1
REV: 1.0
Company: Your Company
Sheet: 1/1
Date: 2024-01-05
Drawn By: Araf Israk
EasyEDA