INGENIERÍA MECÁNICA
TECNOLOGÍA Y DESARROLLO
Vol. 1 No. 5 (2004) 159 - 166

A wheeled mobile robot with obstacle avoidance capability

Víctor J. González Villela[1], Robert Parkin[2], Marcelo López Parra[3], Jesús M. Dorador González[4], and M. Jaqueline Guadarrama Liho[5]

[1, 2] Mechatronics Research Centre, Wolfson School of Mechanical & Manufacturing Engineering, Loughborough University. Holywell Building, Holywell Way, Loughborough, Leicestershire, LE11 3UZ, UK.
Tel: + 44 (0) 150 922 6570. Fax: + 44 (0) 150 928 6577.
Email:[1] V.J.Gonzalez-Villela@lboro.ac.uk, [2] R.M.Parkin@lboro.ac.uk.

[1, 4, 5] Departamento de Ingeniería Mecatrónica, Facultad de Ingeniería, UNAM, CU, México.
[3, 4] Departamento de Ingeniería Mecánica, Facultad de Ingeniería, UNAM, CU, México.
Labs. de Ing. Mecánica "Ing. Alberto Camacho Sánchez", Edificio Anexo de la Facultad de Ingeniería, Circuito Exterior, Ciudad Universitaria, UNAM, 04510, México D.F. México.
Tel. + (52 55) 56 22 80 50 y 51. Fax + (52 55) 56 22 80 55.
Email: [1] vjgv@servidor.unam.mx, [3] lopezp@servidor.unam.mx, [4] dorador@servidor.unam.mx, [5] jgl@servidor.unam.mx.

ABSTRACT

The ability of mobile robots to avoid mobile obstacles using artificial potential fields with the only knowledge of the kinematic model of the robot is addressed in this paper. Here, the artificial potential fields have been taken as both a repulsive distance vector (to the obstacle) and an attractive distance vector (to the goal) to compute velocity commands, in order to prove that artificial potential field methods can be applied with the only knowledge of the robot kinematic model. The effectiveness of the method is validated using MatLab and SIMULINK as simulation framework.

RESUMEN

Este artículo trata de la habilidad de esquivar obstáculos en movimiento de un robot móvil usando campos potenciales artificiales con el sólo conocimiento del modelo cinemático del robot. Donde los campos potenciales artificiales han sido tomados como vectores que representan una distancia repulsiva (al objeto) y una distancia atractiva (a la meta) para luego ser utilizados para calcular comandos de velocidad, comprobando que los métodos de campos potenciales artificiales pueden ser aplicados con el sólo conocimiento del modelo cinemático del robot. La eficacia del método es validada usando MatLab y SIMULINK como marco de simulación.

INTRODUCCIÓN

Industrial robots must be able to move about the environment, from one position an orientation (initial posture) to another position and orientation (final posture), without colliding with objects or their environment. The methods to avoid collision can be classified in two types: 1) Path planning techniques, and 2) obstacle avoidance techniques.

Generally speaking, the *path planning techniques* are related to those techniques that are done before the robot moves. These are associated with the fact that any autonomous vehicle must be able to move around without colliding with the most existing installations. Given a well-designed path or trajectory, allowing only one vehicle to be on the path segment, and using the graph-search algorithm A* [1], we can find the shortest route with collision free. On the other hand, the *obstacle avoidance techniques* are associated to those techniques that are done when the robot is moving. The most popular technique used to avoid obstacles is the potential field approach [2]. These techniques are used to guide the robot to a given goal at the same time that the robot is avoiding obstacles. These control methods use the vectorial sum of the virtual repulsive force (due to the obstacle) and the virtual attractive force (due to the goal) to guide the robot [3]. The use of these algorithms assumes the existence of a dynamic model, in which virtual repulsive and attractive forces are modelled as part of the external forces applied to the robot frame to produce acceleration commands [4]. If a kinematic model is available but the dynamic model is unknown, the use of these methods is unfeasible. One way to solve this problem is by taking the potential fields as distance vectors to be used to produce velocity commands, which will guide the robot thru the environment.

Different kinematic models for wheeled mobile robots can be found in the literature, e.g., [3], [5], [6]. These are associated not only with the dimensions of robot and type of wheels configurations, but also with the position of the robot frame reference system and the selection of the steering system. One drawback on the kinematic models of wheeled mobile robots with restricted mobility is that they are subject to the nonholonomic kinematic constraints, which means that they cannot be integrated. As a consequence, coordinates cannot be eliminated by integrating the kinematic equations of constraints [3].

On the other hand, on artificial potential field approaches we can find useful object models, which provide a real-time obstacle avoidance capability to the robot. Some examples are Force Inducting an Artificial Repulsion from the Surface (FIRAS, from the French) functions and Superquadratic functions, some examples can be can be found in [4], and [7].

The wheeled mobile robots have been classified in omnidirectional and restricted mobility robots [5]. Omnidirectional robots are those that have full mobility in the plane. Restricted mobility robots have less than three degrees of freedom in the plane. Moreover, due to the Brockett necessary condition [8], a restricted mobility robot can be controlled only in the same degrees of freedom in the plane as inputs it has to drive the system. This property does not prevent the restricted mobility robots for being controllable, in concordance with the physical intuition [5]. In this case, the potential field approaches are useful to drive the robot from one position to another, and the path planning techniques are one medium of using the physical intuition in order to finally direct a restricted mobility robot into a specific point with a specific orientation. Then, we can join the initial posture and the final posture by dividing the path in strategic consecutive goal points that the robot should reach. In this case the problem is reduced to reach the next goal after reaching the actual one until arriving at the final goal.

In this work is presented a wheeled mobile robot with two independent motorized rear wheels that use a potential field method technique to operate with obstacle avoidance capability, where the potential fields are taken as distance vectors useful for computing velocity commands in order to direct the robot to the goal whilst avoiding obstacles from one initial posture to a final point on the plane, with the only knowledge of the kinematic model. The method is very useful for directing wheeled mobile robots in structured environments with the presence of fixed and moving obstacles, and has been modelled in MatLab and SIMULINK environment to prove the effectiveness of the method. Here, the moving object is taken as a person who is moving in a relative briskly walking speed.

The remaining of this paper is organized in the following way. First, the general posture and the kinematics of wheeled mobile robots are defined, and a particular kinematic model of a wheeled mobile robot with two independent motorized rear wheels is shown. Then, the problems of "Reaching the goal", "Obstacle modelling", and "Avoiding the obstacle" are defined. Finally, the proposed solution, and their simulation results and conclusions are shown.

ROBOT POSTURE

A wheeled mobile robot is equipped with motors that are driven by on board computer. It is assumed that the wheeled mobile robot is made of a rigid frame, non-deformable wheels that do not slip, and it is moving on a horizontal plane. The position of the robot is fully described by the variables x, y, and θ as shown in Figure 1.

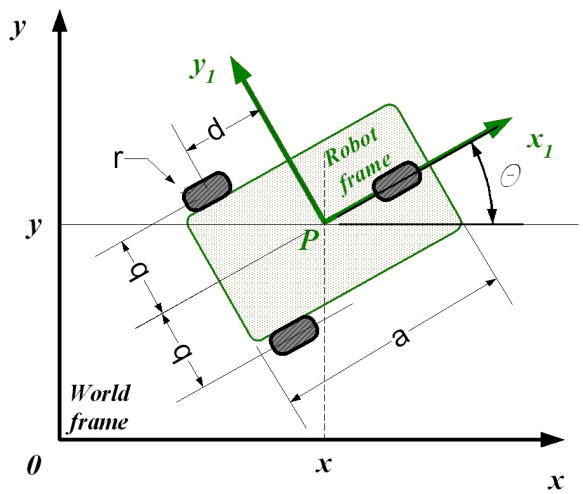

Figure 1. Posture definition.

P is a fixed point on the robot's platform, which position is represented by the coordinates (x, y) with respect to the fixed world frame $\{0, x, y\}$ inertial system. The moving robot frame system $\{P, x_1, y_1\}$ is firmly attached to the point P. θ is the orientation angle of the robot frame system $\{P, x_1, y_1\}$ with respect to the world system $\{0, x, y\}$ measured from the x axis to the x_1 axis. The posture of the robot is fully described by the vector $\xi = \begin{pmatrix} x & y & \theta \end{pmatrix}^T$. The orthonormal rotation matrix used to map the world frame into the robot frame $R(\theta)$, and vice versa $R^T(\theta)$ is given by:

$$R(\theta) \equiv \begin{pmatrix} \cos\theta & \sin\theta & 0 \\ -\sin\theta & \cos\theta & 0 \\ 0 & 0 & 1 \end{pmatrix} \tag{1}$$

KINEMATICS OF WHEELED MOBILE ROBOTS

A wheeled mobile robot system having n-dimensional configuration space C with n generalized coordinates $q=(q_1,...,q_n)$ and subject to m bilateral kinematic constraints can be expressed of the following form [9]:

$$A(q)\dot{q}=0 \tag{2}$$

where $A(q)\in R^{m\times n}$ is the matrix associated with the constraints. Let $N(A)$ be the null space of $A(T)$. Then, by spanning $N(A)$ we can find a set of smooth and linearly independent vector fields $V_1(T),...,V_{n-m}(T)$. If we let $S(T)$ be a full rank matrix consisted of this vectors $S(T)=[V_1(T),...,V_{n-m}(T)]$, it is always possible to define $n-m$ input velocities $\upsilon(t)=[v_1 \quad v_2 \quad ... \quad v_{n-m}]^T$, where $\upsilon(t)\in R^{n-m}$ is called the steering system or the auxiliary velocity vector of the vehicle, such that, for all t

$$\dot{q}=S(q)\upsilon(t) \tag{3}$$

where $\upsilon(t)$ is the pre-selected input velocity vector for the kinematic model.

KINEMATICS OF A WHEELED MOBILE ROBOT WITH TWO INDEPENDENT MOTORIZED REAR WHEELS

One kinematic model for this type of wheeled mobile robot (Figure 1) can be found in [9], where the front wheel is a free wheel (castor wheel) that does not work for kinematic purposes [5]. The kinematic constraint due to the robot must move in the direction of the symmetry axis can be written as:

$$\dot{y}\cos\theta-\dot{x}\sin\theta-d\dot{\theta}=0 \tag{4}$$

and the rolling constraints due to the driving wheels do not slip can be written as:

$$\begin{aligned}\dot{x}\cos\theta+\dot{y}\sin\theta+b\dot{\theta}&=r\dot{\phi}_r\\ \dot{x}\cos\theta+\dot{y}\sin\theta-b\dot{\theta}&=r\dot{\phi}_l\end{aligned} \tag{5}$$

where $\dot{\phi}_r$ and $\dot{\phi}_l$ are the corresponding angular velocities of the right and left wheel, r is the radius of the wheels, d is the distance from the rear wheels' axle to the point P, b is the positive distance from each rear wheel to the x_1 axis, and $\dot{\theta}$ is the angular velocity of the robot frame.

Defining the generalized coordinates vector as $T=(x \quad y \quad \theta \quad \phi_r \quad \phi_l)^T$ and the generalized velocities vector as $\dot{q}=[\dot{x} \quad \dot{y} \quad \dot{\theta} \quad \dot{\phi}_r \quad \dot{\phi}_l]^T$, we can rewrite the constraints in the form of $A(T)T=0$, where:

$$A(q)\dot{q}=\begin{bmatrix}-\sin\theta & \cos\theta & -d & 0 & 0\\ -\cos\theta & -\sin\theta & -b & r & 0\\ -\cos\theta & -\sin\theta & b & 0 & r\end{bmatrix}\begin{bmatrix}\dot{x}\\ \dot{y}\\ \dot{\theta}\\ \dot{\phi}_r\\ \dot{\phi}_l\end{bmatrix} \tag{6}$$

Then, instead of finding a solution for $S(T)$ to the system given in (6) by selecting the velocities of the rear wheels as the steering system $\upsilon(t)=[\dot{\phi}_r \quad \dot{\phi}_l]^T$, as in [9], we can find a set of smooth and linear independent vector fields for $S(T)$ that span the null space of $A(T)$ when it is given the $n-m$ steering system $\upsilon(t)=[v_1 \quad v_2]^T=[\dot{x}_1 \quad \dot{\theta}]^T=[v \quad \omega]^T$, where $Y_1=\dot{x}_1=Y$ is the heading linear velocity of the robot at the point P and $v_2=\dot{\theta}=\omega$ is the angular velocity of the robot frame, then $T=S(T)\upsilon(t)$ can be written as:

$$\begin{bmatrix}\dot{x}\\ \dot{y}\\ \dot{\theta}\\ \dot{\phi}_r\\ \dot{\phi}_l\end{bmatrix}=\begin{bmatrix}\cos\theta & -d\sin\theta\\ \sin\theta & d\cos\theta\\ 0 & 1\\ 1/r & b/r\\ 1/r & -b/r\end{bmatrix}\begin{bmatrix}v\\ \omega\end{bmatrix} \tag{7}$$

With (7) we can compute the whole velocities at the work space $[\dot{x} \quad \dot{y} \quad \dot{\theta}]^T$ and at the joint space $[\dot{\phi}_r \quad \dot{\phi}_l]^T$ due to the heading linear velocity v of the point P and angular velocity w of the robot frame, where the steering system $\upsilon(t)=[v \quad w]^T$ is the input of the kinematic model.

THE PROBLEM DEFINITION

Since a two independent motorized rear wheel mobile robot is defined as a restricted mobility robot [5] that has only two inputs, we only can control two variables on the plane (as imposed by the Brockett necessary condition [8]). In our case we will use (x_f, y_f) to define the final position of the robot, and then leave the final orientation of the robot to be reached to the path planning techniques. Then, in this paper, the problem to direct the robot from an initial posture to a final position (goal) while avoiding a mobile obstacle is defined as: given a specific posture (x_i, y_i, θ_i) reach the position (x_f, y_f) while avoiding moving obstacles. This problem can be described for the following aspects.

REACHING THE GOAL

The problem of reaching the goal (Figure 2) is defined as the direction and velocity in which the robot should be directed in order to reach the goal. First of all, let us define the distance vector to the goal as $d_g = (x_f - x_i, y_f - y_i)$, where the distance magnitude to the goal is defined as $d_g = \sqrt{(x_f - x_i)^2 + (y_f - y_i)^2}$, and the angle to the goal as $\theta_g = \tan^{-1}[(y_f - y_i)/(x_f - x_i)]$, where the error angle to the goal is defined as $\theta_e = \theta_g - \theta_i$. Then, the robot is directed from initial posture $\xi_i = [x_i \quad y_i \quad \theta_i]$ to the final position using the following rules.

$$v = \begin{cases} v_{\max} & if \quad |d_g| > k_r \\ \dfrac{v_{\max}}{k_r} \cdot d_g & if \quad |d_g| \le k_r \end{cases} \tag{8}$$

where $Y_{\max}$ is the maximum heading velocity and k_r is the radius of the docking area.

$$\omega = \omega_{\max} \sin(\theta_e) \tag{9}$$

where $\omega_{\max}$ is maximum angular velocity of the robot platform.

With these rules (8) and (9), the robot is directed to the final position at the maximum linear velocity when it is outside of the docking area, and it will be approaching slowing down when it is inside the docking area. On the other hand, the robot will be correcting the heading angle as function of the sine of the error angle θ_e, where the maximum angular velocity $\omega = \pm\omega_{\max}$ will be achieved at $\theta_e = \pm 90^0$, and the minimum angular velocity $\omega = 0$ will be at $\theta_e = 0^0$.

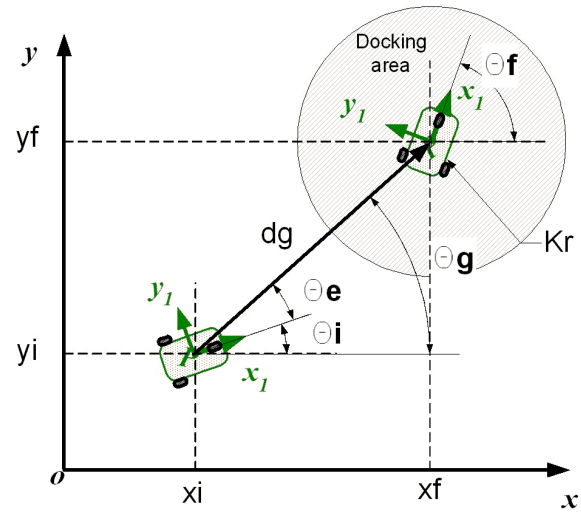

Figure 2. Problem definition of reaching the goal.

OBSTACLE MODELLING

In this work the modelling of obstacles has been taken from [4], where the artificial potential field U_0 is taken as a repulsive distance vector. As a consequence we can use this artificial potential function with the only knowledge of the kinematic model. Then, using the shortest distance to the obstacle O, the potential function can be written as:

$$U_0 = \begin{cases} \dfrac{1}{2}\eta\left(\dfrac{1}{\rho} - \dfrac{1}{\rho_0}\right)^2 & if \quad \rho \le \rho_0 \\ 0 & if \quad \rho > \rho_0 \end{cases} \tag{10}$$

where η is a constant gain, ρ_0 represents the limit distance of the potential field influence, and ρ the shortest distance from the robot to the obstacle O.

The selection of η and ρ_0 depends on the mobile robot $Y_{\max}$ and $\omega_{\max}$ velocities that allows the robot to be able to avoid obstacles. When the obstacles are taken as circular obstacles with radius ρ_r, then, the distance ρ can be computed as the distance to the centre of the object ρ_c minus ρ_r. This way, the potential function can be rewriting as:

$$U_0 = \begin{cases} \frac{1}{2}\eta\left(\frac{1}{\rho_c - \rho_r} - \frac{1}{\rho_0}\right)^2 & if \quad \rho_c \le \rho_0 + \rho_r \\ 0 & if \quad \rho_c > \rho_0 + \rho_r \end{cases} \tag{11}$$

AVOIDING THE OBSTACLE

Avoiding objects while the robot is reaching a goal using artificial potential field methods has been defined as control method which uses the vectorial sum of virtual repulsive forces (due to the objects) and virtual attractive forces (due to the goals) to provide a resultant force to guide the vehicle, as shown in the Figure 3. In this case, again the use of the forces is unfeasible when the dynamical model is unknown; as consequence, in this work we assume that those potential forces are repulsive distance vectors, which can be used to produce velocity commands useful for directing the robot.

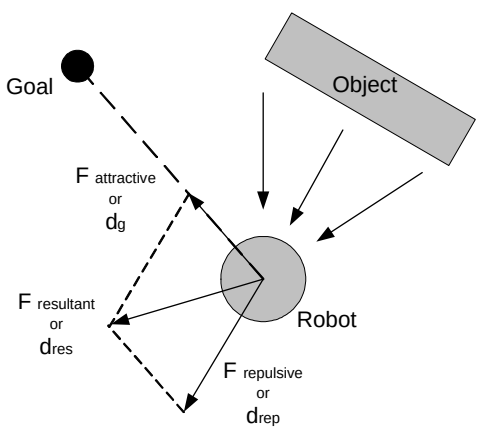

Figure 3. Potential-Field control approach.

PROPOSED SOLUTION

The kinematic model of the wheeled mobile robot (7) can be used to find the actual position and orientation of the robot (x_i, y_i, θ_i) by integrating the first three generalized speeds $\begin{bmatrix}\dot{x} & \dot{y} & \dot{\theta}\end{bmatrix}^T$. The final two generalized speeds $\begin{bmatrix}\dot{\phi}_r & \dot{\phi}_l\end{bmatrix}^T$ can be used to produce the required velocity commands for the motors. In this way, we can compute at any instant time the actual robot posture (x_i, y_i, θ_i) and with the knowledge of the final position (x_f, y_f) compute the distance vector to the goal d_g. Then, in presence of obstacles, we can compute the distance resultant vector $d_{res} = d_g + d_{rep}$ as the total vector sum of repulsive distances due to objects d_{rep} and the distance vector to the goal . Besides, we can compute a new avoid angle error defined as , where is the angle of the vector, and is the steering velocity commands which direct the robot into the goal while avoiding obstacles. Finally, the new rules can be written as:

$$v = \begin{cases} v_{\max} & if \quad |d_{res}| > k_r \\ \frac{v_{\max}}{k_r} \cdot d_{res} & if \quad |d_{res}| \le k_r \end{cases} \tag{12}$$

$$\omega = \omega_{\max} \sin(\theta_{avoid,e}) \tag{13}$$

We can see that in absence of obstacles $d_{res} = d_g$, so that, the robot behaves in normal conditions. In presence of obstacles the new component d_{rep} will direct the robot far from the obstacle.

SIMULATION RESULTS

In the Figure 6 you will find the Simulik block diagram of the problem. The block I represents the kinematic of the robot associated to the plane, and corresponds to the first three generalized speeds of the equation (7), it includes the input initial conditions and the integration of the output variables $(\dot{x}, \dot{y}, \dot{\theta})$ to compute the vector (x, y, θ). The block II represents the problem definition of reaching the goal as shown in Figure 2. It computes the distance to the goal vector d_g, and normalize the θ_i as an angle defined between $-\pi$ and π. The block III computes the repulsive distance vector d_{rep} due to a moving rounded object as shown in (11) by taking the actual position of the robot (x, y), the actual position of the object (x_0, y_0), and the corresponding object modelling parameters η, ρ_r, and ρ_0. The block IV computes the potential field resultant distance G_{res} and the avoid angle error $\theta_{aviod,e}$. The block V computes the velocity commands (Y, ω) according to the equations (12) and (13). The bock VI computes the robot wheels velocity commands $\dot{\phi}_r$ and $\dot{\phi}_l$ according to the second part of the kinematic model show in (7). The block VII is a S-function, which is the graphic simulation routine.

In this case we are assuming that we have a wheeled mobile to robot with the following dimensions: $b = 0.50m$, $a = 1.00P$, $d = 0.4m$, and $r = 0.075P$. That can move at $Y_{\max} = 1 \ P/V$ and at $|\omega_{\max}| = \pi/5 \ 1/V$. The object has been modelled as a man with radius $\rho_r = 1/2 \ m$, who is walking about the environment a relative briskly walking speed of 1.5 P/V, and with a field influence of $\rho_0 = 3 \ m$. In this case the robot should reach the point $(x_f, y_f) = (10m, 10m)$ departing from the posture $(x_i, y_i, \theta_i) = (-10\,m, -10\,m, \frac{3}{2}\pi \cdot rad)$, while avoiding a moving obstacle. The Figure 5 shows the simulation results, where graphs (a) and (b) shows position of the robot (x, y) respectively. The graphs (c) and (d) represents the heading linear velocity and the angular velocity to the robot frame. And final two graphs (e) and (f) represents the angular velocity of the right wheel and the angular velocity of the left wheel. The Figure 4 shows the sequence of the simulation.

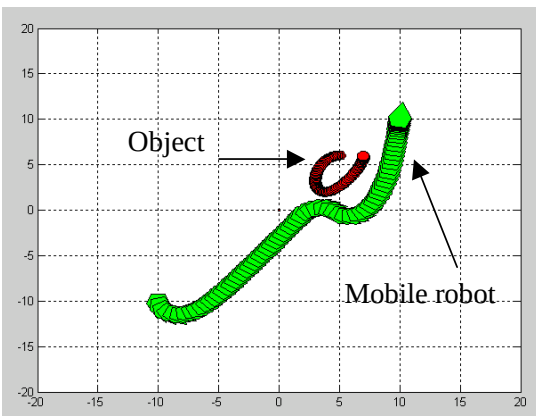

Figure 4. Graphic simulation sequence.

CONCLUSIONS

Here has been proved that the use of artificial potential field methods can be useful for directing a restricted mobile robot from one posture into a position while it is avoiding obstacles, with the only knowledge of the robot kinematic model by taking the potential fields as a distance vectors in order to compute the velocity commands, as shown in the control rules (12) and (13). Selecting the steering system as $\upsilon(t) = [v \quad \omega]^T$ has been crucial for determining these control rules. The use of potential functions to model the objects has proved their efficacy. Besides, joining the initial posture and the final posture by dividing the path in strategic consecutive goal points can be a solution for the control of the robot trajectory and the final docking angle. In this case the problem is reduced to reach the next goal after reaching the actual one until arriving at the final goal. The method presented in this paper is very useful for directing wheeled mobile robots, which moves relatively slowly (e.g., forklifts), in structured environments with the presence of fixed or/and moving obstacles.

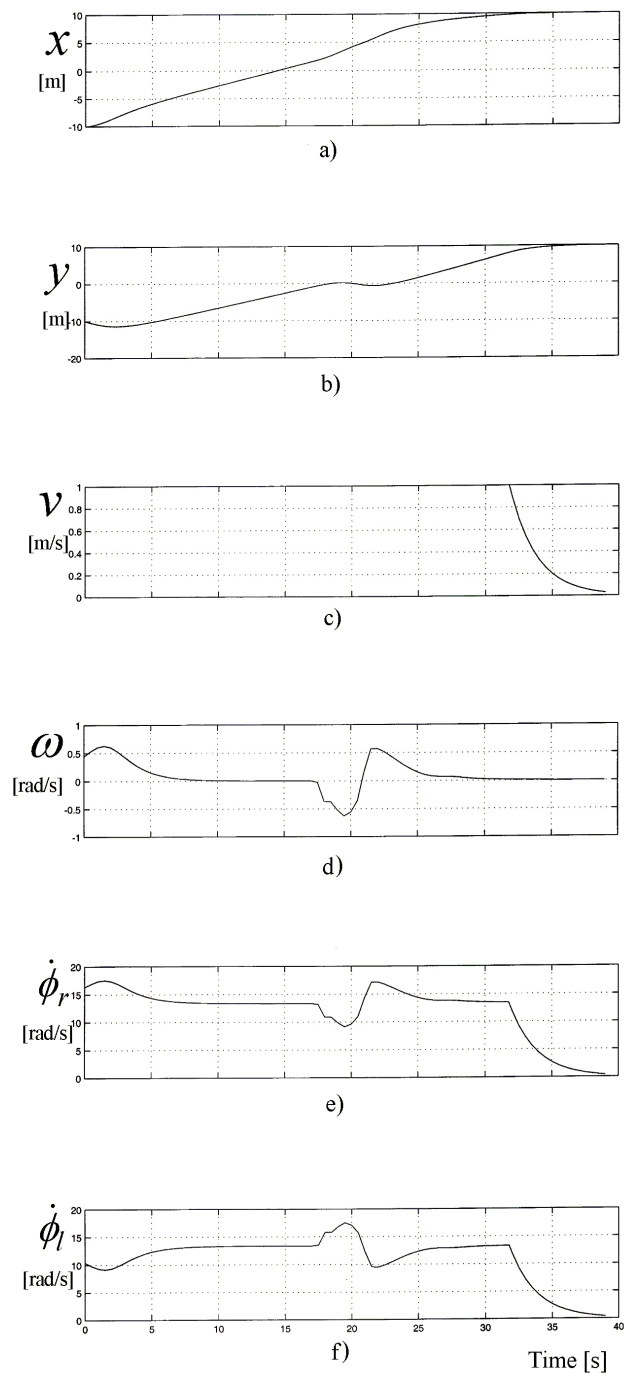

Figure 5. Simulation results.

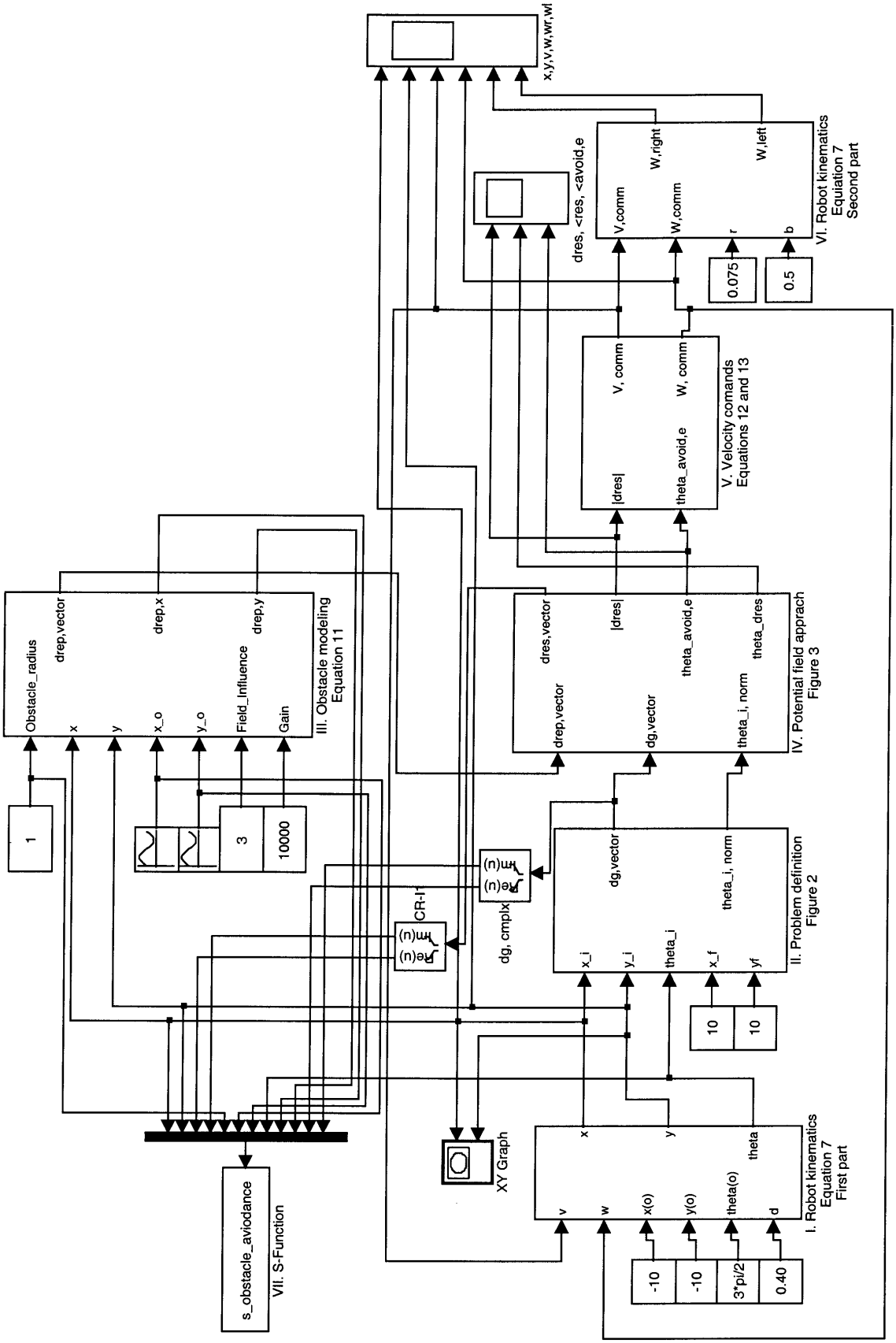

Figure 6. SIMULINK block diagram.

ACKNOWLEDGEMENTS

The first author would like to acknowledge to the "Dirección General de Asuntos del Personal Académico" (DGAPA) and the "Facultad de Ingeniería" of the "Universidad Nacional Autónoma de México" (UNAM) for the support received to undertake PhD studies at the Mechatronics Research Centre, Loughborough University, UK.

REFERENCES

1. Cameron, S., "Obstacle avoidance and path planning". *Industrial Robot: An International Journal*. Vol: **21**(5): p. 9-14, 1994.

2. Latombe, J.C., *Robot motion planning*. Boston: Kluwer Academic Publishers. 1991.

3. Zhao, Y. and BeMent, S.L. *Kinematics, dynamics and control of wheeled mobile robots*. Robotics and Automation, Proceedings of the IEEE International Conference on. Nice. Vol: **1**: p. 91 - 96, 1992.

4. Khatib, O., "Real-time obstacle avoidance for manipulators and mobile robots". *The International Journal of Robotics Research*. Vol: **5**(1): p. 90-98, 1986.

5. Campion, G., Bastin, G., and d'Andrea-Novel, B., "Structural properties and classification of kinematic and dynamic models of wheeled mobile robots". *Robotics and Automation, IEEE Transactions on*. Vol: **12**(1): p. 47-62, 1996.

6. Thuilot, B., d'Aandrea-Novel, B., and Micaelli, A., "Modeling and feedback control of mobile robots equipped with several steering wheels". *Robotics and Automation, IEEE Transactions on*. Vol: **12**(3): p. 375 - 390, 1996.

7. Khosla, P. and Volpe, R. *Superquadric artificial potentials for obstacle avoidance and approach*. Robotics and Automation, Proceedings of the IEEE International Conference on. Philadelphia, PA. Vol: **3**: p. 1380 - 1385, 1988.

8. Brockett, R.W. *Asymptotic stability and feedback stabilization*. Differential geometric control theory, Proceedings of the conference. Michigan Technological University: Boston, Mass. : Birkhauser: p. 181-191, 1993.

9. Yamamoto, Y. and Yun, X., *Coordinating locomotion and manipulation of a mobile manipulator*, in *Recent trends in mobile robots*, Y.F. Zheng, Editor. 1993, World Scientific: Singapore ; London. p. 157-181.