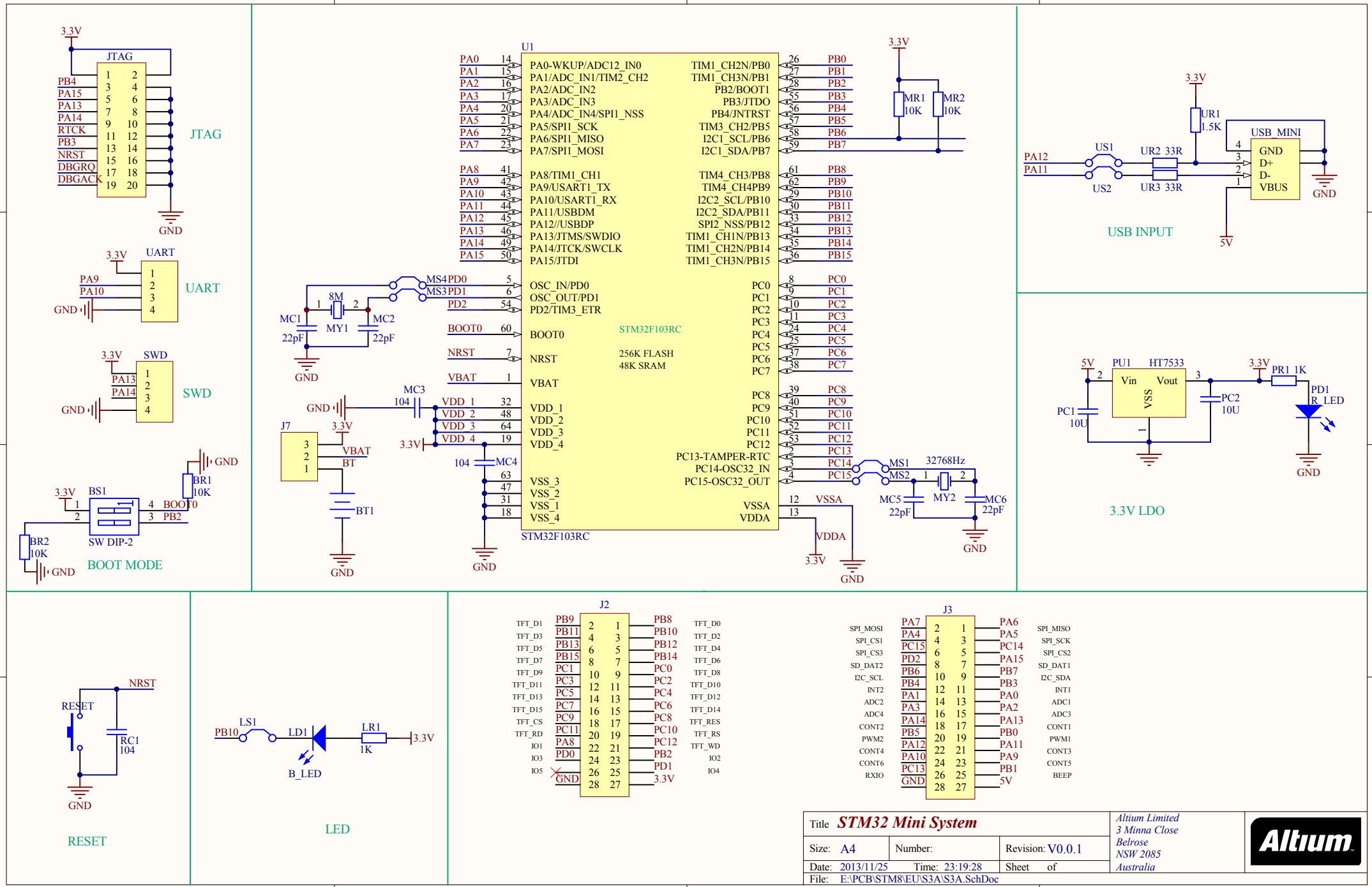
JTAG
UART
SWD
BOOT MODE
U1
STM32F103RC
256K FLASH
48K SRAM
USB INPUT
USB_MINI
3.3V LDO
HT7533
RESET
LED
J2
J3
Title STM32 Mini System
Size: A4
Number:
Revision: V0.0.1
Date: 2013/11/25
Time: 23:19:28
Sheet of
File: E:\PCB\STM8\EU\S3A\S3A.SchDoc
Altium Limited
3 Minna Close
Belrose
NSW 2085
Australia
Altium