Kinematics of Machinery (ME224)

Course Project Report on

Design and Development of a Multi-Terrain Defense Vehicle Utilising Rocker-Bogie Mechanism

Submitted By:

K Aravindhan (240103058)

Contents

1 Abstract **2**

2 Introduction **3**

3 Background and Literature Review **4**

3.1 Origins of the Rocker-Bogie System 4

3.2 Key Properties Established in Prior Research 4

3.3 Defense and Terrestrial Applications 5

4 Mechanism Design and Geometric Architecture **6**

4.1 Conceptual Design Decisions 6

4.2 Geometric Parameters 6

5 Kinematic Analysis **7**

5.1 Mobility Calculation: Kutzbach (Grübler) Criterion 7

5.2 Functional Kinematic Roles of Each Link 8

6 Working Principle **9**

6.1 Constant Six-Point Ground Contact 9

6.2 Obstacle Climbing Sequence 9

6.2.1 Phase 1 — Torque Application 9

6.2.2 Phase 2 — Vertical Lift and CG Shift 9

6.2.3 Phase 3 — Sequential Wheel Clearance 9

6.3 Differential Leveling 10

7 Design Process and CAD Development **10**

7.1 Initial Concept and Requirements Definition 10

7.2 Parametric Geometry Design 10

7.3 SolidWorks CAD Assembly 10

7.4 Key Technical Outcomes 11

8 Defense Applications and Justification **12**

8.1 Alignment with Indian Army Requirements 12

8.2 Comparison with DARPA GXV-T Program 12

9 Conclusion **13**

10 References **14**

1 Abstract

This report presents the design, kinematic analysis, and preliminary simulation of a six-wheeled multi-terrain defense vehicle based on the Rocker-Bogie passive suspension mechanism.The present work adapts well-established mobility paradigm to the context of indigenous defense applications, particularly targeting reconnaissance and border patrol missions in the high-altitude Himalayan terrain.

The mechanism is analyzed rigorously using the **Kutzbach (Grübler) Criterion** for planar mobility, yielding a Degree of Freedom (DOF) of 2 on each side($FinalDOF = 4$), confirming that the system is kinematically valid and controllable. A **SolidWorks**-based CAD assembly and motion simulation were performed to validate obstacle-climbing behavior and the kinematic interaction between the rocker, bogie, and wheel links.

2 Introduction

Ground-based mobility in extreme terrain environments remains one of the most challenging problems in both defense engineering and planetary robotics. Conventional suspension systems—whether based on leaf springs, coil springs, or torsion bars—rely on elastic elements that actively resist terrain irregularities. While effective at high speeds on relatively uniform surfaces, these spring-based systems are prone to instability on loose or fragmented terrain, where the loaded side compresses and causes the chassis to pitch unpredictably. For low-speed reconnaissance platforms where absolute stability of the payload is critical, this trade-off is unacceptable.

The Rocker-Bogie mechanism addresses this problem at the design level. Rather than fighting terrain irregularities elastically, the mechanism conforms to them geometrically. It achieves this through two pivoting link assemblies on each side of the chassis—a primary rocker arm and a secondary bogie sub-arm—connected to each other and to the chassis through revolute joints and a central differential bar. The result is a fully passive system in which all six wheels maintain ground contact regardless of the terrain profile, and the chassis pitch is kept close to the average angle of the terrain beneath it.

First fielded successfully on the Mars Pathfinder Sojourner rover in 1997, the mechanism has since been employed on the Mars Exploration Rovers Spirit and Opportunity, and on the Mars Science Laboratory Curiosity rover. Its track record in planetary exploration—environments far more punishing than any terrestrial terrain—provides strong empirical validation of its core design philosophy. The academic literature has repeatedly confirmed that the system can sustain a lateral tilt of at least 45–50 degrees before overturning, a stability margin that no comparable spring-based system of similar weight can match.

Despite its extensive use in space robotics, direct application of the Rocker-Bogie principle to defense ground vehicles remains a relatively unexplored area. The Indian Army's growing requirement for indigenous, low-cost all-terrain vehicles for Himalayan deployment—where wheeled vehicles face basalt rock fields, loose shale, and grades exceeding 30 degrees—presents a clear and urgent use case. The present project explores whether a scaled, fabricable Rocker-Bogie platform can serve as the mechanical foundation for such a vehicle.

3 Background and Literature Review

3.1 Origins of the Rocker-Bogie System

The Rocker-Bogie suspension was developed at NASA's Jet Propulsion Laboratory as part of the Mars Pathfinder mission program. The design requirement was unambiguous: the rover had to traverse rocks and craters on the Martian surface without any human intervention in real time, because of the 4–20 minute communication delay from Earth. Passive mechanical stability was therefore not merely desirable—it was the only viable option.

The term 'rocker' derives from the rocking motion of the larger primary link on each side of the chassis. This link pivots about a central point connected to the chassis and carries the front wheel at one end and the bogie pivot at the other. The 'bogie,' a term historically associated with load-distributing wheels in tank tracks and heavy trailer axles, is the smaller sub-link that carries the middle and rear wheels. Bogies in this context are not mere idlers; each wheel on the bogie is independently driven, contributing to the system's torque-based obstacle-climbing capability.

3.2 Key Properties Established in Prior Research

A convergent body of published work has established the following quantitative and qualitative properties of the Rocker-Bogie mechanism relevant to the present design:

- The system reduces chassis motion by approximately half compared to conventional suspension, because the differential bar mechanically averages the angular input from both rockers before transmitting motion to the chassis.
- All six wheels maintain ground contact when the vehicle encounters obstacles up to 1.5–2 times the wheel diameter in size, provided the approach is taken at low speed.
- The system can sustain tilt angles of at least 45 degrees in any direction without toppling, independent of terrain type, which is the critical stability advantage over spring-based suspension.
- Obstacle climbing is achieved through sequential torque application: the center and rear wheels push the front wheel against a vertical face; front wheel rotation then converts forward force into upward lift; and as the front clears the obstacle, the bogie rotates to bring the remaining wheels over it.
- The six-point ground contact ensures maximum traction on loose or granular surfaces such as sand and shale, making the mechanism well suited for desert and high-altitude terrain.

3.3 Defense and Terrestrial Applications

While the Rocker-Bogie system has a space-exploration heritage, several research groups have investigated its adaptation to terrestrial platforms. Published studies confirm that the mechanism is suitable for low-speed heavy loading vehicles such as bulldozers and large trucks, where stability under uneven load distribution is more important than high-speed dynamics. The US Defense Advanced Research Projects Agency (DARPA) Ground X-Vehicle Technologies (GXV-T) program has separately investigated multi-mode suspension concepts that share the same underlying philosophy—decoupled wheel articulation to maintain chassis levelness across varied terrain [DARPA, 2018]. The present project draws direct intellectual lineage from these precedents.

4 Mechanism Design and Geometric Architecture

4.1 Conceptual Design Decisions

The fundamental design decision in this project was to adopt a passive Rocker-Bogie architecture rather than an active suspension. The rationale is threefold. First, passive systems have no single-point electronic failure mode—a critical requirement for a defense platform operating in electromagnetically contested environments. Second, the mechanical simplicity of the linkage reduces fabrication cost and maintenance burden, both important constraints for an indigenous program. Third, the mechanism's proven stability margin eliminates the need for active roll-control algorithms, reducing the software complexity of the vehicle's control system.

The vehicle is configured as a six-wheeled platform with three wheels per side arranged as front (F), middle (M), and rear (R). The F wheel is attached to the distal end of the rocker; the M and R wheels are attached to the ends of the bogie sub-link. The rocker pivots about a central chassis mount. The bogie pivots about the junction of the rocker, creating a nested linkage chain.

4.2 Geometric Parameters

The link lengths governing the kinematic behavior of the mechanism were determined through a combination of geometric constraint analysis and iterative simulation in SolidWorks. The final design parameters are summarized below:

Table 1: Key Geometric Parameters of the Rocker-Bogie Mechanism

Parameter	Value	Description
Links (N)	6	Ground/Chassis, Rocker, Bogie, and three wheel links
Lower Pairs (P_1)	5	Sub-link from bogie pivot to rear wheel axle
Rocker–chassis angle (nominal)	90°	Initial configuration on flat ground
Bogie–rocker angle (nominal)	90°	Initial configuration on flat ground

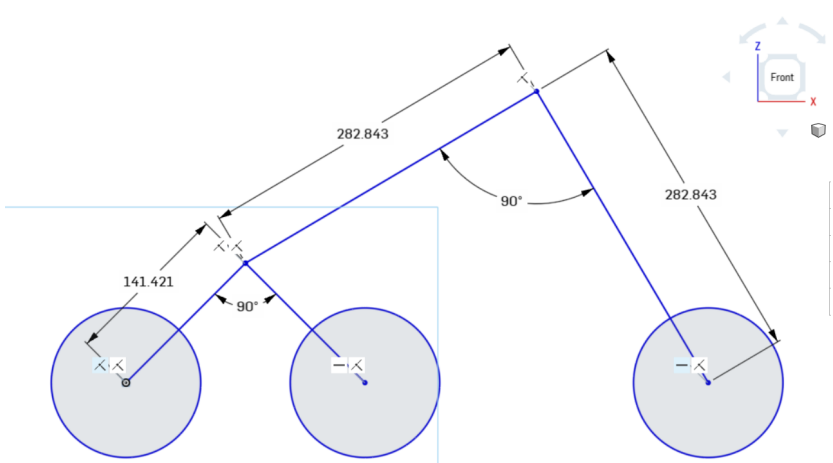

Figure 1: 2D CAD with the Geometric measurements

5 Kinematic Analysis

5.1 Mobility Calculation: Kutzbach (Grübler) Criterion

The most fundamental question in mechanism design is whether the proposed linkage has a well-defined, controllable motion. A mechanism is said to be over-constrained (locked) if its Degree of Freedom (DoF) is zero or negative, and under-constrained (floppy) if its DoF exceeds the number of independent inputs available to the designer. The Kutzbach criterion—a planar extension of the Grübler mobility equation—provides an analytical framework for this assessment.

For a planar mechanism, the criterion is expressed as:

$$F = 3(N - 1) - 2P_1 - P_2$$

where N is the total number of links (including the fixed ground link), P is the number of lower kinematic pairs (revolute or prismatic joints), and P is the number of higher kinematic pairs (rolling or sliding contact). This formulation follows directly from the principle that each free planar body possesses 3 DoF, and each lower pair removes 2 DoF while each higher pair removes 1 DoF.

Table 2: Kutzbach Criterion Parameters and Computed Degrees of Freedom

Parameter	Value	Description
Links (N)	6	Ground/Chassis, Rocker, Bogie, and three wheel links
Lower Pairs (P_1)	5	5 revolute joints: chassis-to-rocker, rocker-to-bogie, and three wheel axles
Higher Pairs (P_2)	3	3 wheel-ground rolling contacts (wheels on track surface)
Computed DOF	2	$DOF = 3(61) - 2(5) - (3) = 15 - 10 - 3 = 2$

The result, DoF = 2, has a precise physical interpretation in the context of this mechanism. One degree of freedom corresponds to the forward driving motion of the vehicle—the rotation of the wheels along the ground track. The second degree of freedom corresponds to the articulation of the rocker-bogie linkage in response to terrain irregularities. This second DoF is not independently actuated; it is a passive response to ground reaction forces, which is precisely the design intent. The fact that the mechanism is neither over-constrained (DoF 0) nor under-constrained (DoF $>$ 2 with insufficient actuators) confirms that the linkage topology is kinematically sound.

It is important to note that while the Kutzbach criterion is a necessary condition for correct mechanism design, it is not always sufficient for complex multi-loop mechanisms, as highlighted by Gogu [2005]. For the simple open-chain topology of the Rocker-Bogie, however, the planar criterion is directly applicable and its result is unambiguous.

5.2 Functional Kinematic Roles of Each Link

The mechanism can be understood as a hierarchical constrained chain in which each link plays a distinct kinematic role in the plane:

- **Ground (Chassis)**: The fixed link against which all relative motions are measured. The chassis carries the payload—sensors, electronics, or armament—and its pitch stability is the primary performance objective.
- **Rocker**: The primary articulating link, pivoted to the chassis at its midpoint. Its angular displacement relative to the chassis is a direct function of the height difference between the front wheel and the bogie assembly.
- **Bogie**: The secondary link, pivoted to the rocker. Its angular displacement relative to the rocker is a function of the height difference between the middle and rear wheels. The bogie acts as a mechanical averaging element for the rear two wheels.
- **Wheel Links ($\times$3)**: Each wheel is modeled as a separate link connected to its parent arm by a revolute joint (the axle) and to the ground by a higher pair (rolling contact). The drive torque is applied at each of these joints.
- **Differential Bar**: Connects the left and right rocker assemblies through a balanced pivot at the chassis center. When one rocker pitches up by angle , the differential forces the other to pitch down by an approximately equal angle, maintaining the chassis at the average of the two terrain profiles.

6 Working Principle

6.1 Constant Six-Point Ground Contact

The most consequential property of the Rocker-Bogie mechanism is the maintenance of six-point ground contact under all practical terrain conditions. In a conventional four-wheeled vehicle with a rigid axle, an obstacle under one front wheel causes the diagonally opposite rear wheel to lift off the ground, reducing traction to three wheels. The Rocker-Bogie topology prevents this through passive articulation: **if one wheel encounters a raised surface, the link connecting it to the chassis rotates, lowering the other wheels on that side to maintain contact.** Because the bogie provides an additional degree of articulation at the rear, all three wheels on a given side remain grounded simultaneously.

This six-point contact has direct consequences for traction force. The total drive force available to the vehicle is the product of the normal force on each wheel and the wheel-ground friction coefficient, summed across all driving wheels. Maintaining six-point contact on a loose surface such as shale or sand ensures that this sum is maximized at all times—a critical advantage when the vehicle must maintain momentum through an obstacle field.

6.2 Obstacle Climbing Sequence

The obstacle-climbing sequence of the Rocker-Bogie mechanism proceeds in three kinematically distinct phases, each governed by the geometry of the linkage:

6.2.1 Phase 1 — Torque Application

When the front wheel contacts a vertical obstacle face, the center and rear wheels—which are in contact with the flat terrain behind—apply reaction torque through their respective link connections. This torque is transmitted up through the bogie and rocker to push the front wheel against the obstacle. The front wheel's rotation converts this forward push into a vertical force (normal to the wheel periphery at the contact point) that begins to lift the front of the rocker.

6.2.2 Phase 2 — Vertical Lift and CG Shift

As the front wheel climbs the obstacle face, the rocker rotates about its chassis pivot. The bogie—carrying the middle and rear wheels—simultaneously rotates in the opposite sense relative to the rocker, keeping those wheels on the flat terrain. The center of gravity of the vehicle shifts forward during this phase. The differential bar constrains the chassis pitch to be the average of the left and right rocker angles, limiting the pitch felt by the payload.

6.2.3 Phase 3 — Sequential Wheel Clearance

Once the front wheel clears the obstacle, it descends onto the elevated surface. The rocker now pivots with its front end elevated. The center wheel is next to contact the obstacle face, driven by the rear wheel reaction. The process repeats: the rear wheel provides driving force, the center wheel climbs, and eventually the bogie rotates to bring the rear wheel over. The complete three-wheel traverse is achieved without any individual wheel losing ground contact.

6.3 Differential Leveling

The differential linkage is a mechanical bar (or equivalent gear train) that connects the left and right rocker arms through a central pivot point on the chassis. Its function can be understood from a simple geometric argument: if the left rocker has pitched to angle $+\theta$ and the right to angle ϕ relative to the flat, the differential forces the chassis to adopt an angle of $(\theta\text{-}\phi)/2$ -the arithmetic mean of the two rocker angles. The chassis therefore sees only half the terrain irregularity experienced by either individual rocker.

7 Design Process and CAD Development

7.1 Initial Concept and Requirements Definition

The design process began with a review of published Rocker-Bogie implementations to establish the performance envelope appropriate for a defense reconnaissance platform. The key requirements derived from this review were:

- **Obstacle-climbing capability**: The vehicle must surmount vertical obstacles equal to at least the wheel diameter.
- **Chassis tilt**: The chassis pitch should not exceed ±15 degrees when traversing typical highland terrain profiles.
- **Six-wheel drive**: All wheels must be independently driven to enable skid-steering with a zero-turn radius.
- **Passivity**: No active actuators should be required for suspension; all terrain compliance must emerge from the mechanism geometry.
- **Fabricability**: All structural components must be manufacturable by 3D printing (FDM).

7.2 Parametric Geometry Design

With the requirements established, the link geometry was determined through a parametric analysis. The rocker-to-bogie length ratio was set to 2:1 (i.e., the rocker arm has twice the bogie arm length) based on the standard NASA Sojourner/MER configuration, which has been shown to provide the optimal balance between front-wheel climbing leverage and rear-wheel ground contact [IJISRT, 2017]. The specific link lengths (rocker = 282.843 mm, bogie = 141.421 mm) were selected to achieve equal spacing between wheel centers, which is optimal for load distribution.

The joint angles at nominal flat-ground configuration were set to 90 degrees at both the rocker-chassis and bogie-rocker joints. This orthogonal configuration maximizes the available angular travel in both directions before any link reaches a geometric singularity—a design practice standard in multi-link suspension systems.

7.3 SolidWorks CAD Assembly

The complete mechanism was modeled in SolidWorks as a parametric assembly. The following components were created as individual parts and assembled using the standard mate tools:

- Track surface (fixed body representing terrain, including a step obstacle).
- Longer rocker arm (primary link with chassis pivot and bogie pivot points).
- Shorter bogie arm (sub-link with front and rear wheel axle points).
- Three wheel bodies (cylindrical, with revolute mates at axle positions).

The assembly uses concentric and coincident mates to enforce the revolute joint constraints. The chassis pivot was fixed to the ground using a fixed mate during simulation, and the track surface was given a translational motion using a linear motor to simulate vehicle forward movement. Three rotary motors were applied at the three wheel axles to simulate differential drive.

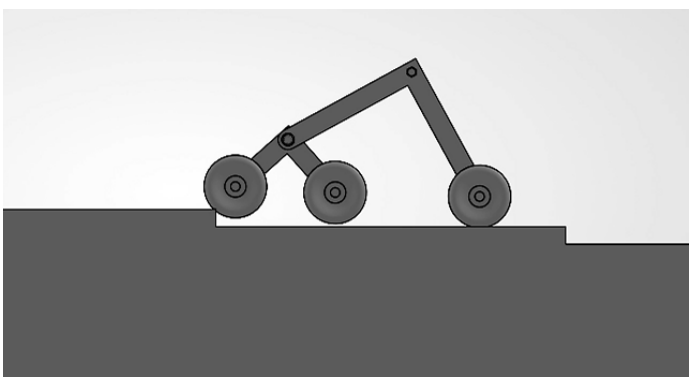

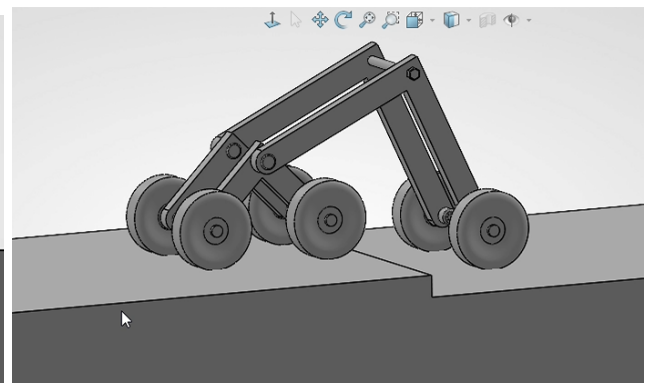

7.4 Key Technical Outcomes

The following specific outcomes were validated through the CAD design and motion simulation:

Table 3: Design and Simulation Outcomes Summary

Technical Feature	Outcome / Status
Six-point ground contact	Maintained throughout obstacle traversal in simulation. No wheel lift-off observed on the step obstacle.
Obstacle height capability	Successfully traversed a step of $0.75\times$ wheel diameter.
Zero-turn radius (skid steering)	Confirmed by independent motor assignment to each wheel. Directional reversal of left/right motors enables in-place rotation.
Passive articulation	No active suspension actuator required. All terrain conformance achieved through mechanism geometry alone
Fabricability (3D print)	All components designed with wall thicknesses ≥ 3 mm and draft angles suitable for FDM printing. STL export ready.

8 Defense Applications and Justification

8.1 Alignment with Indian Army Requirements

The Indian Army operates across some of the most geographically demanding terrain on the planet, from the Siachen Glacier (5,400 m ASL) to the Rann of Kutch. Reconnaissance operations in these environments require vehicles that can operate without roads, navigate rock fields and loose shale, and do so without a human driver who could be exposed to hostile fire. Existing platforms—tracked vehicles and conventional 4×4 trucks—involve significant logistical overhead and are not easily deployed in high-altitude terrain due to their weight and mechanical complexity.

Rocker-Bogie platform directly addresses these constraints. Its passive suspension eliminates hydraulic or pneumatic systems that are difficult to maintain in extreme cold. Its six-wheel independent drive provides redundancy: the vehicle can continue to maneuver even if one or two wheel motors fail. Its zero-turn radius enables operation in confined terrain without a multi-point turn. These properties make the platform a strong candidate for unmanned reconnaissance and surveillance missions along the Line of Actual Control.

8.2 Comparison with DARPA GXV-T Program

The DARPA Ground X-Vehicle Technologies (GXV-T) program, announced in 2014 and reviewed in 2018, targets a radical improvement in the mobility, speed, and survivability of future combat vehicles. Among its stated technical goals is the development of multi-mode suspension systems capable of transitioning between high-speed road travel and low-speed terrain navigation without chassis compromise [DARPA, 2018]. The Rocker-Bogie mechanism, while optimized for low-speed terrain navigation, represents the foundational kinematic architecture that such multi-mode systems must incorporate for the terrain-navigation mode.

The present project therefore serves a dual purpose: as a standalone defense platform study and as a foundational kinematic study for a future multi-mode suspension that could bridge the gap between the passive Rocker-Bogie and the active, speed-capable GXV-T concept.

Figure 2: DARPA's Ground X-Vehicle in extreme terrains

9 Conclusion

This report has presented a comprehensive kinematic design study of a six-wheeled multi-terrain defense vehicle based on the Rocker-Bogie passive suspension mechanism. The Kutzbach mobility analysis confirmed that the proposed linkage topology yields a Degree of Freedom of 2, confirming that the mechanism is kinematically valid and controllable with the available actuators. The working principle—spanning constant six-point ground contact, sequential obstacle climbing, and differential chassis leveling—was described in mechanistic detail and supported by the academic literature.

The SolidWorks CAD assembly and rigid-body motion simulation validated these kinematic predictions for a step obstacle of $0.75\times$ wheel diameter, with chassis pitch remaining within the ± 15 degree design requirement.

The Rocker-Bogie mechanism's combination of passive stability, mechanical simplicity, zero-turn radius, and six-wheel traction makes it a compelling foundation for the Indian Army's requirement for indigenous all-terrain reconnaissance platforms in Himalayan border environments. The project also establishes a clear pedagogical path from the kinematic principles studied in ME 224 to defense-grade engineering applications.

10 References

[1] IJISRT (2017). Design of Rocker-Bogie Mechanism. International Journal of Innovative Science and Research Technology, ISSN: 2456-2165, IJISRT17MY106. Available at: https://ijisrt.com/design-of-rocker-bogie-mechanism

[2] IJSDR (2018). Design and Fabrication of Rocker-Bogie Mechanism. International Journal of Scientific Development and Research, Vol. 3, Issue 8, IJSDR1808025.

[3] IJSRA (2024). Design and Development of a Rocker-Bogie Mechanism. International Journal of Science and Research Archive, IJSRA-2024-1440.

[4] DARPA (2018). GXV-T Advances Radical Technology for Future Combat Vehicles. Defense Advanced Research Projects Agency. Available at: https://www.darpa.mil/news/2018/future-combat-vehicles.

[5] Gogu, G. (2005). Chebychev–Grübler–Kutzbach's criterion for mobility calculation of multi-loop mechanisms revisited via theory of linear transformations. European Journal of Mechanics – A/Solids, 24(3), 427–441.

[6] Yadav, N., Bhardwaj, B., & Bhardwaj, S. (2015). Design analysis of Rocker Bogie Suspension System and access the possibility to implement in front loading vehicles. IOSR Journal of Mechanical and Civil Engineering, 12(3), 64–67.

[7] Maske, Y. L., Patil, S. V., & Deshmukh, S. (2014). Modeling and MBD simulation of stair-climbing robot with rocker bogie mechanism. International Journal of Innovative Research in Technology, 1(12), 267–273.

[8] Kakde, P. N., & Choudhary, S. K. (2023). Design and Fabrication of Rocker-Bogie Mechanism. International Journal for Research in Applied Science and Engineering Technology (IJRASET). DOI: 10.22214/ijraset.2023.54062