Python Assignment No. 8

March 10, 2020

In this assignment, the focus will be on two powerful capabilities of Python:

- Symbolic Algebra
- Analysis of Circuits using Laplace Transforms

1 Analysis of Circuits using Laplace Transforms

Consider the following figure (from page 274 of Horowitz and Hill):

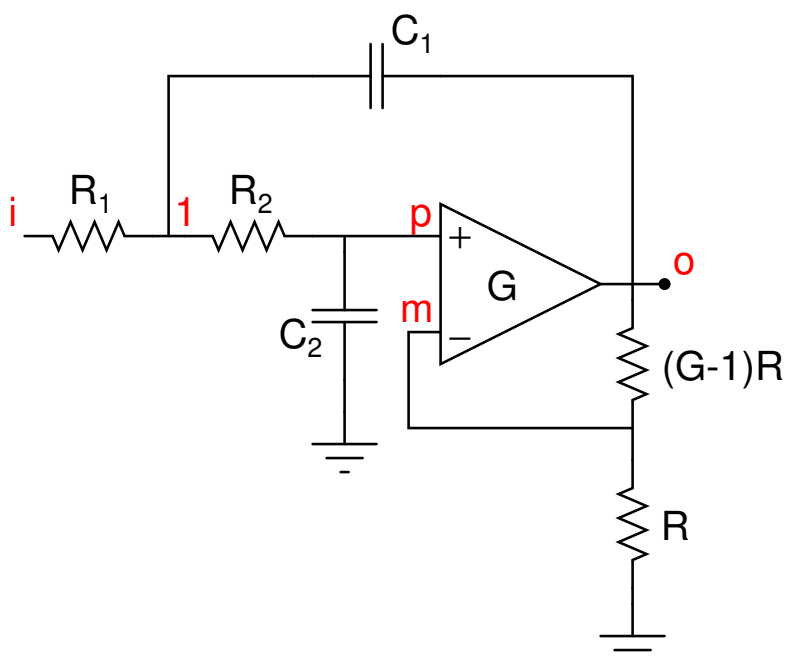

where $G = 1.586$ and $R_1 = R_2 = 10k\Omega$ and $C_1 = C_2 = 10$pF. This gives a 3dB Butterworth filter with cutoff frequency of $1/2\pi$MHz.

The circuit equations are

$$V_m = \frac{V_o}{G} \tag{1}$$

$$V_p = V_1 \frac{1}{1 + j\omega R_2 C_2} \tag{2}$$

$$V_o = G(V_p - V_m) \tag{3}$$

$$\frac{V_i - V_1}{R_1} + \frac{V_p - V_1}{R_2} + j\omega C_1 (V_o - V_1) = 0 \tag{4}$$

Solving for V_o in 3, we get

$$V_o = \frac{GV_1}{2}\frac{1}{1+j\omega R_2 C_2}$$

Thus, Eq. 4 becomes an equation for V_1 as follows:

$$\frac{V_i}{R_1} + V_1\left(-\frac{1}{R_1} + \frac{1}{R_2}\frac{1}{1+j\omega R_2 C_2} - \frac{1}{R_2} + j\omega C_1 \frac{G}{2}\frac{1}{1+j\omega R_2 C_2} - j\omega C_1\right) = 0$$

The term involving G will dominate, and so we obtain

$$V_1 \approx \frac{2V_i}{G}\frac{1+j\omega R_2 C_2}{j\omega R_1 C_1}$$

Substituting back into the expression for V_o we finally get

$$V_o \approx \frac{V_i}{j\omega R_1 C_1} \tag{5}$$

We would like to solve this in Python and also get (and plot) the exact result. For this we need the sympy module.

2 Introduction to Sympy

Start *isympy*

```
$ isympy
IPython console for SymPy 1.4 (Python 3.7.3-64-bit) (ground types: gmpy)
These commands were executed:
>>> from __future__ import division
>>> from sympy import *
>>> x, y, z, t = symbols('x y z t')
>>> k, m, n = symbols('k m n', integer=True)
>>> f, g, h = symbols('f g h', cls=Function)
>>> init_printing()
Documentation can be found at https://docs.sympy.org/1.4/
```

Normally we invoke ipython and import * from pylab. Instead we invoke sympy. It starts up with some pre-defined variables and the Ipython shell and also interactive plotting. Note: when coding these lines have to be included. The string inside the symbols command tells sympy how to print out expressions involving these symbols. For instance

```
>>> x,y,z = symbols('x y speed')
>>> x=y+1/z
>>> x
```

$y + \frac{1}{speed}$

This is confusing, so just use the variable name for the symbol. One place where this is useful is for greek symbols:

```
>>> w=symbols('omega')
>>> x=w*y+z
>>> x
```

ω*y+z

Note that symbols are not python variables:

```
>>> expr=x+1
>>> print(expr)
x + 1 # a symbolic expression
>>> x=2  # reassignment of x
>>> print(expr)
x + 1 # changing x did not change expr
>>> print(x)
2     # did change x though
>>> expr=x+1
>>> print(expr)
3     # now expr used current value of x - no longer a symbol
```

This can lead to confusion, so be careful.

Rational functions of s are straightforward in sympy

```
>>> s,R2,C2=symbols('s R_2 C_2')
>>> h=-1/(1+s*R2*C2)
>>> print(h)
-1/(C_2*R_2*s+1)
>>> h
   -1
___________
C_2R_2s + 1
```

We will require to create some matrices. For example

```
>>> M=Matrix([[1,2],[3,4]])
>>> M
|1  2|
|    |
|3  4|
```

creates a 2×2 matrix containing

$$\begin{pmatrix} 1 & 2 \\ 3 & 4 \end{pmatrix}$$

If you define a matrix and a column vector you can multiply them as in Matlab using "*"

```
>>> N=Matrix([5,6])
>>> M*N
|17|
|  |
|39|
```

Suppose you want to solve $Mx = N$. Then we need to use the inverse of M

```
>>> M.inv()*N
|-4 |
|   |
|9/2|
```

Finally, to link to the Python we already know, we need to be able to generate numbers out of symbols. For that we use *evalf*.

```
>>> expr=sqrt(8)
>>> expr
2√2
>>> expr.evalf()
2.82842712474619
```

This works for single numbers. But what if we want to plot the magnitude response of a laplace transform expression? We use something called lambdify

```
>>> h=1/(s**3+2*s**2+2*s+1)
>>> import pylab as p
>>> ww=p.logspace(-1,1,21)
>>> ss=1j*w
>>> f=lambdify(s,h,"numpy")
>>> p.loglog(ww,abs(f(ss)))
>>> p.grid(True)
>>> p.show()
```

What lambdify does is it takes the sympy function "h" and converts it into a python function which is then applied to the array 'ss'. This is much faster than iterating over the elements of ss and using evalf on the elements. **Note that the first argument in lambdify, s, is whatever occurs in the definition of h. i.e., it is the symbolic variable inside h. In the loglog line, we actually replace 's' by a Numpy array, 'ss'.**

3 Using Sympy to solve our circuit problem

We can solve directly for the exact result from Python. Let us define $s = j\omega$, and rewrite the equations in a matrix equation

$$\begin{pmatrix} 0 & 0 & 1 & -\frac{1}{G} \\ -\frac{1}{1+sR_2C_2} & 1 & 0 & 0 \\ 0 & -G & G & 1 \\ -\frac{1}{R_1}-\frac{1}{R_2}-sC_1 & \frac{1}{R_2} & 0 & sC_1 \end{pmatrix} \begin{pmatrix} V_1 \\ V_p \\ V_m \\ V_o \end{pmatrix} = \begin{pmatrix} 0 \\ 0 \\ 0 \\ V_i(s)/R_1 \end{pmatrix}$$

This is the equation that we create and solve for now. The following function both defines the matrices and solves for the solution.

```
from sympy import *
import pylab as p
def lowpass(R1,R2,C1,C2,G,Vi):
  s=symbols('s')
  A=Matrix([[0,0,1,-1/G],[-1/(1+s*R2*C2),1,0,0], \
    [0,-G,G,1],[-1/R1-1/R2-s*C1,1/R2,0,s*C1]])
  b=Matrix([0,0,0,Vi/R1])
```

That defines the coefficient matrices. Note that I did not include $V_i(s)$ in the vector `b`. I multiply it in later. However, I could have included it here as well. Now we solve for the solution.

```
  V=A.inv()*b
```

This solution is in s space.

Now extract the output voltage. Note that it is the fourth element of the vector. The logic of this line is explained below the code.

```
    return (A,b,V)
```

We now use this function to generate the plot for the values mentioned above. Note that the input voltage is a unit step function.

```
A,b,V=lowpass(10000,10000,1e-9,1e-9,1.586,1)
print('G=%f' % G)
Vo=V[3]
print(Vo)
ww=p.logspace(0,8,801)
ss=1j*ww
hf=lambdify(s,Vo,'numpy')
v=hf(ss)
p.loglog(ww,abs(v),lw=2)
p.grid(True)
p.show()
```

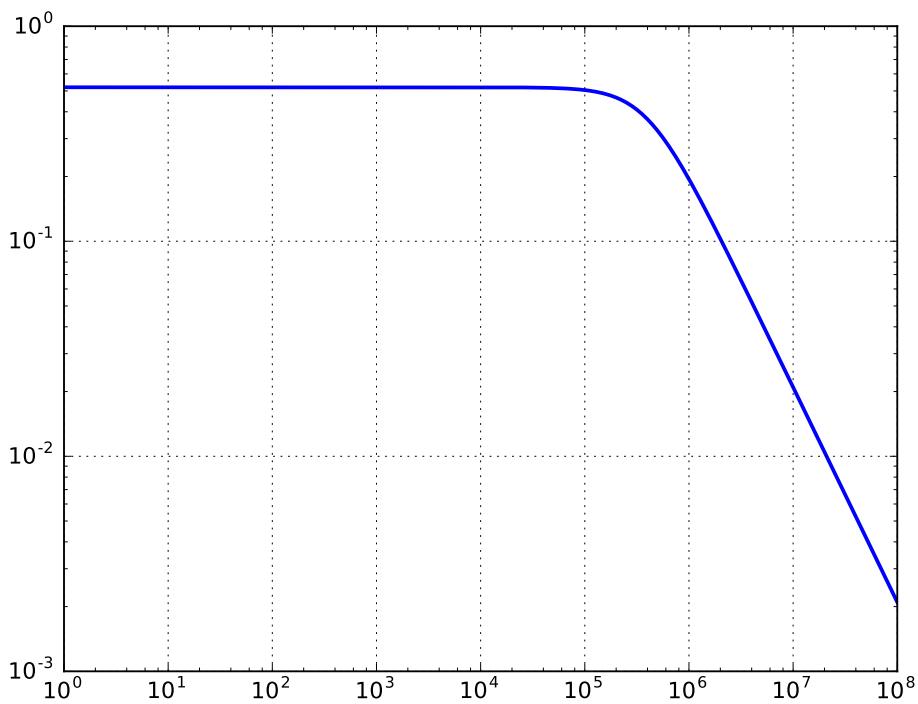

4 The Assignment

1. Obtain the step response of the circuit above. Use the signal toolbox of last week's assignment.

2. The input is

$$v_i(t) = \left(\sin(2000\pi t) + \cos\left(2 \times 10^6 \pi t\right)\right) u_0(t) \text{ Volts}$$

   Determine the output voltage $v_0(t)$

   Consider the following circuit (from page 274 of Horowitz and Hill)

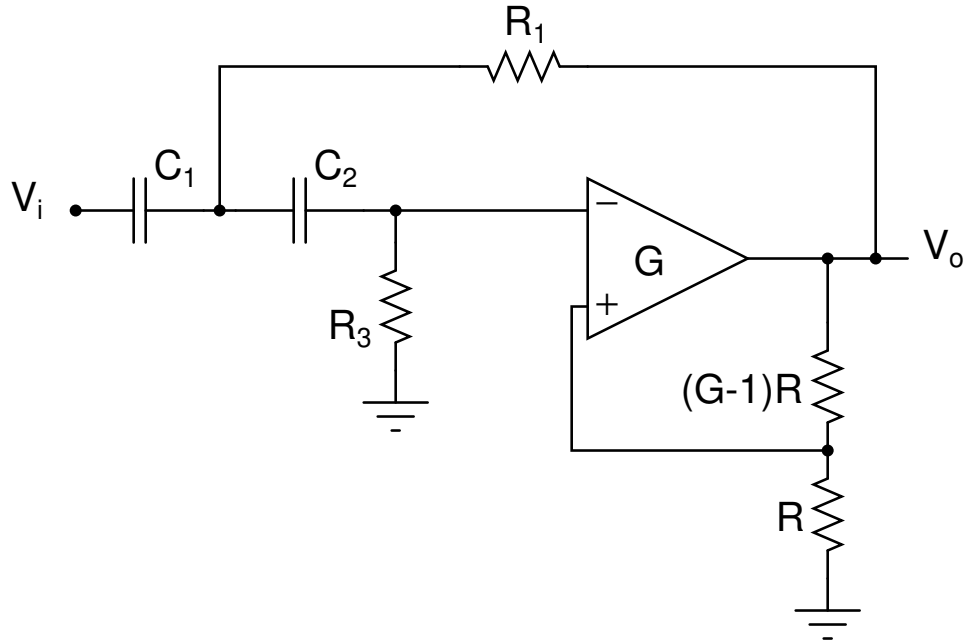

The values you can use are $R_1 = R_3 = 10k\Omega$, $C_1 = C_2 = 1$nF, and $G = 1.586$.

3. Analyse the circuit using Sympy as explained above, i.e., create a function similar to the one defined above. For the same choice of components and gain, this circuit is a highpass filter.

4. Obtain the response of the circuit to a damped sinusoid (i.e., use suitable V_i). Use signal.lsim to simulate the output.

5. Obtain the response of the circuit to a unit step function. Do you understand the response? (Just define Vi to be 1/s)