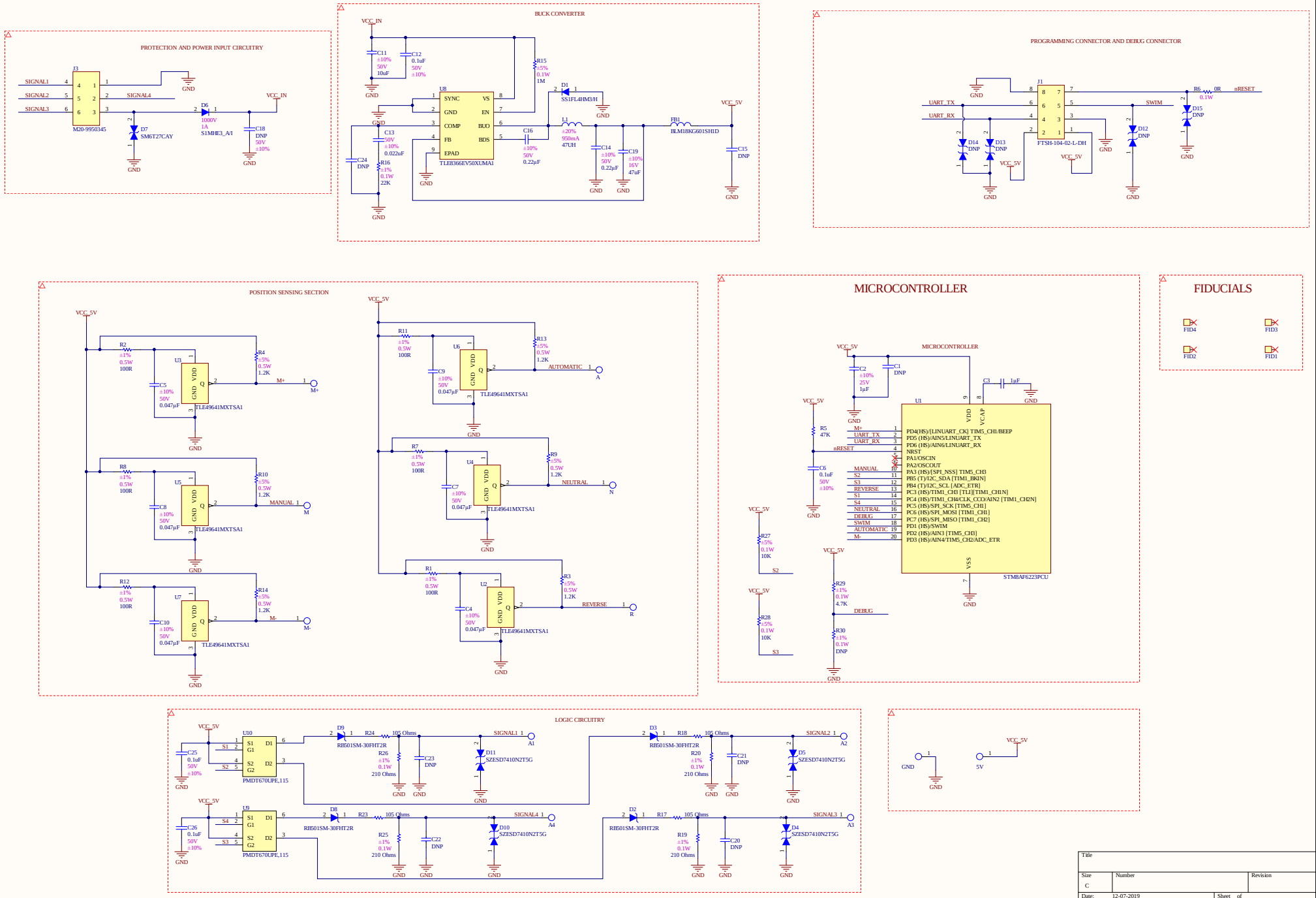AMT BASED ON HALL EFFECT SENSOR