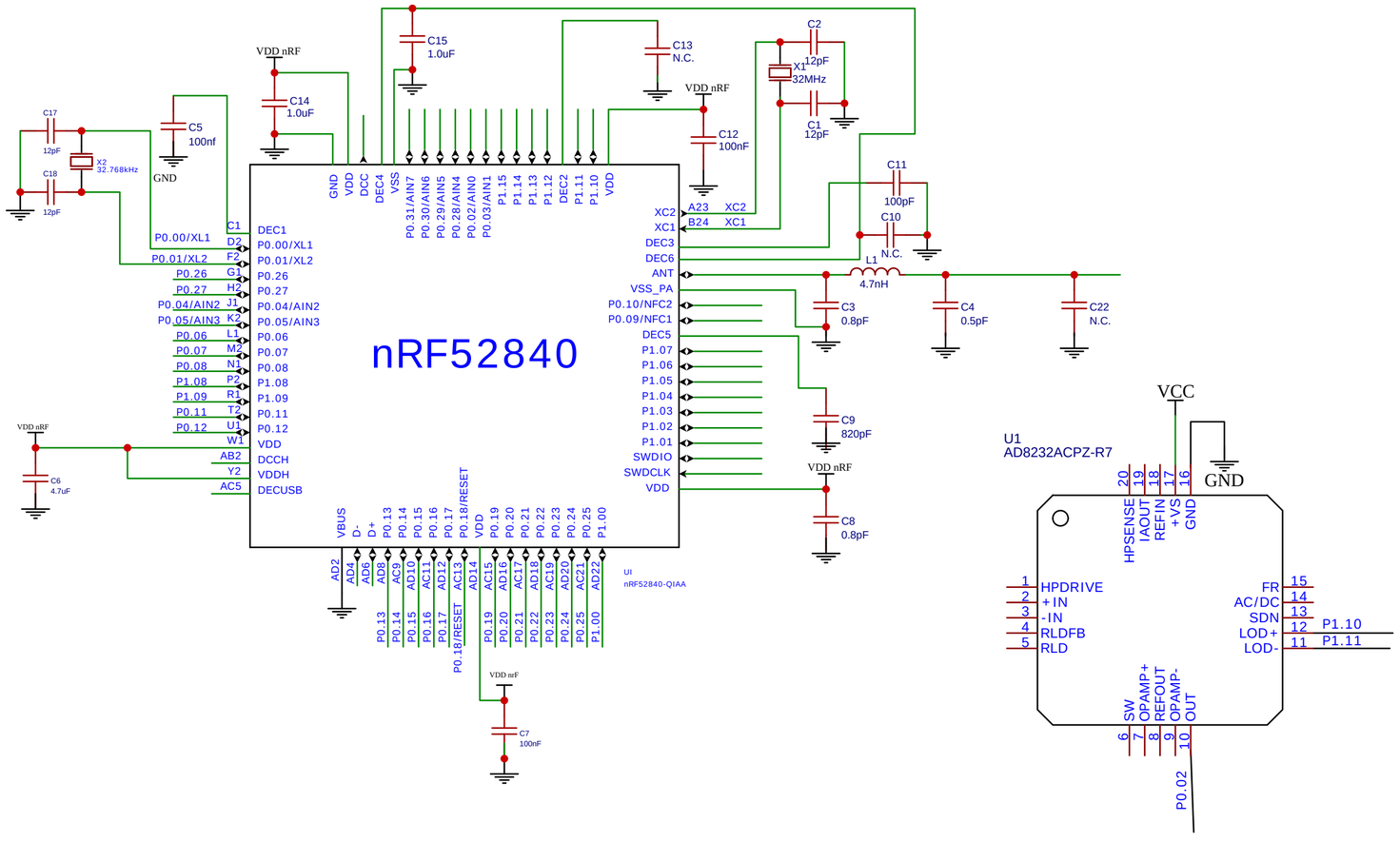

TITLE: Sheet_1		REV: 1.0
EasyEDA	Company: Abhaya Information Technology LLP.	Sheet: 1/1
	Date: 2019-12-10 Drawn By: Paul Rodrigues	