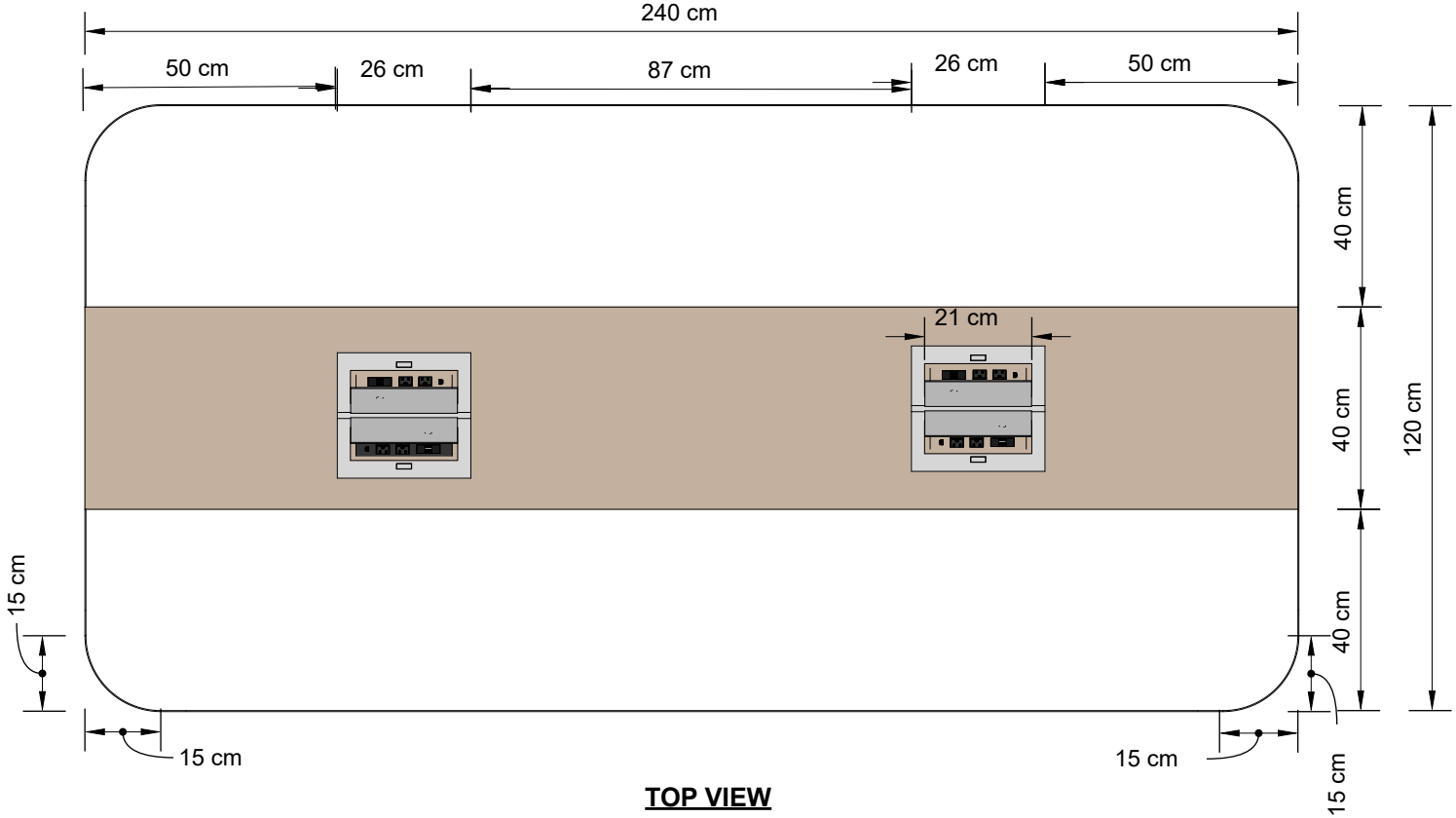

TOP VIEW

COMPANY NAME
ARCHITECTURE NEXT

CLIENT
ABID

PROJECT
G9 KINFRA OFFICE

PROJECT NO.
G9-1

ISSUE
13/03/26

DRAWN BY
KETH

CONFERENCE TABLE

A.01

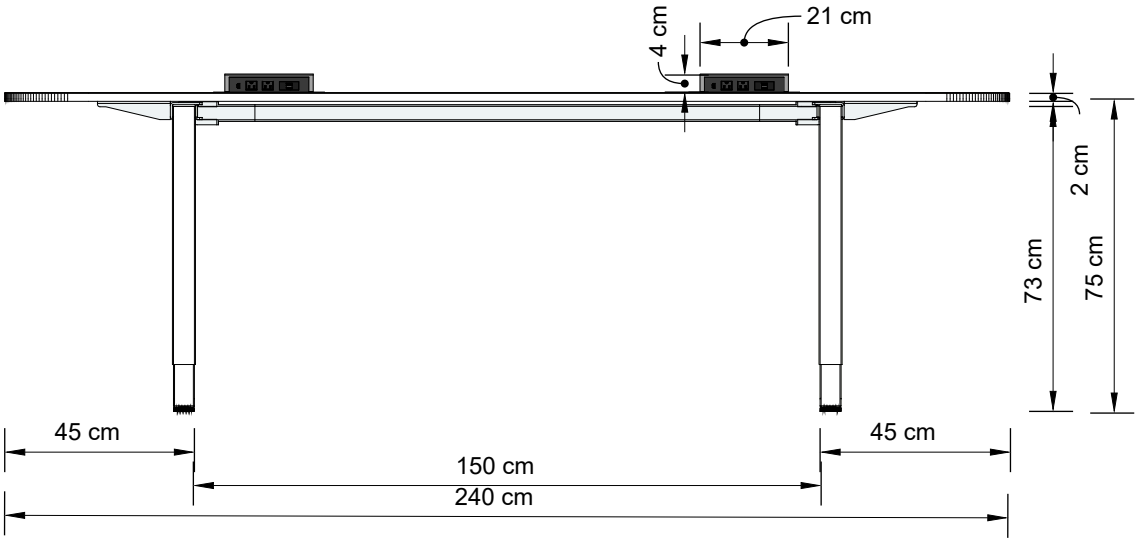

FRONT VIEW

COMPANY NAME
ARCHITECTURE NEXT

CLIENT
ABID

PROJECT
G9 KINFRA OFFICE

PROJECT NO.
G9-1

ISSUE
13/03/26

DRAWN BY
KETH

CONFERENCE TABLE

A.02

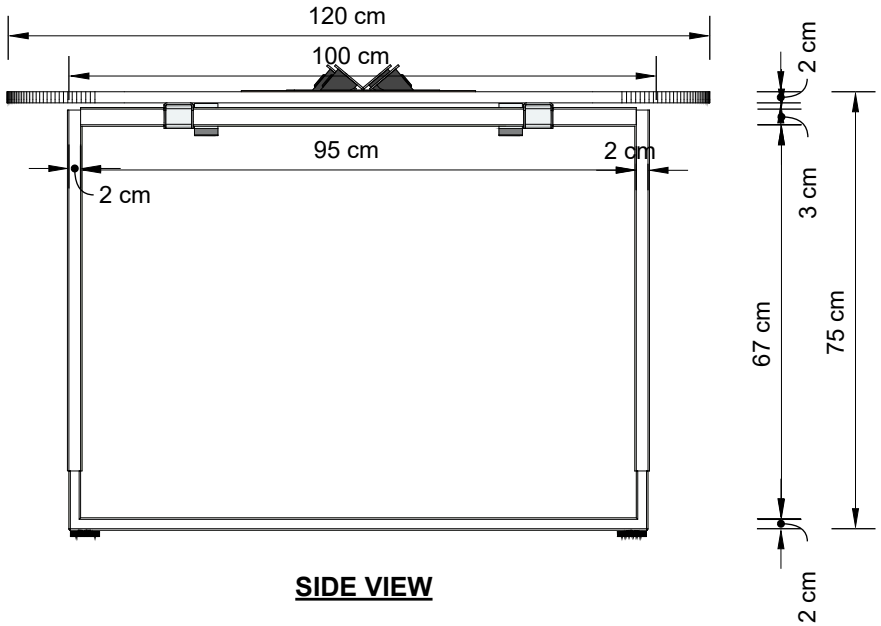

SIDE VIEW

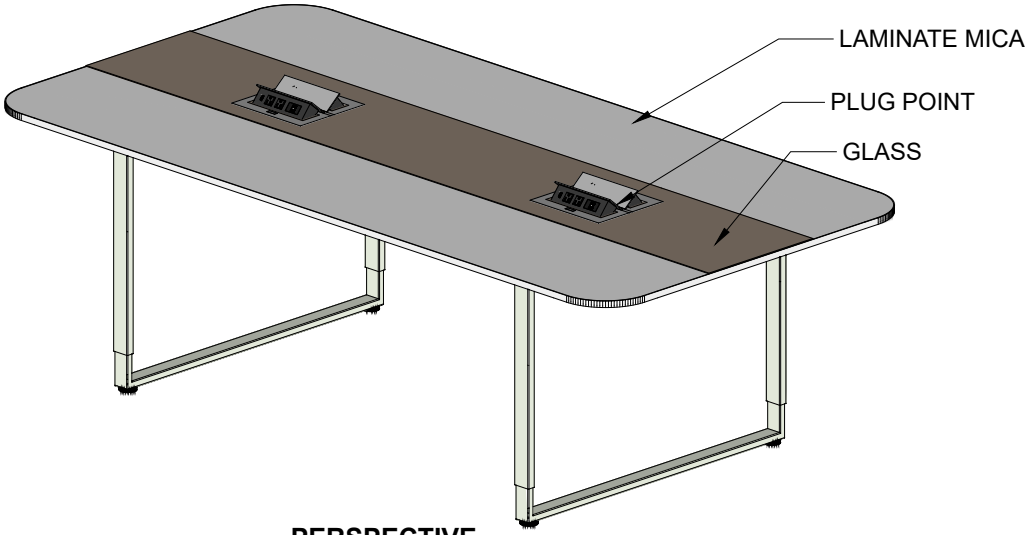

PERSPECTIVE

COMPANY NAME
ARCHITECTURE NEXT

CLIENT
ABID

PROJECT
G9 KINFRA OFFICE

PROJECT NO.
G9-1

ISSUE
13/03/26

DRAWN BY
KETH

CONFERENCE TABLE

A.03