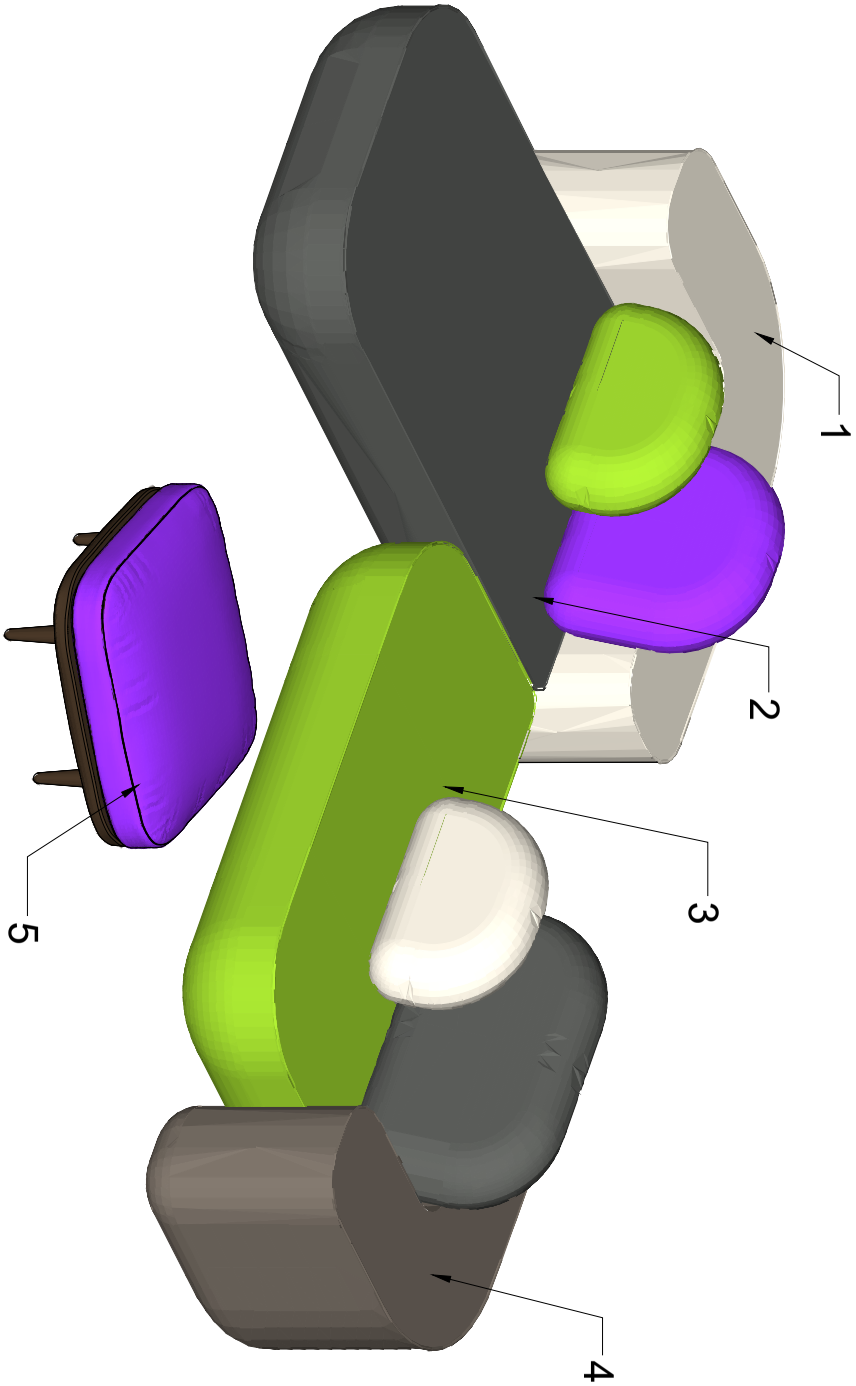

A.7

WAITING AREA SET

ISSUE	PROJECT	CLIENT	COMPANY NAME
11/03/26	G9 KINFRA OFFICE	ABID	ARCHITECTURE NEXT
DRAWN BY	**PROJECT NO.**		
KETH	G9-1		

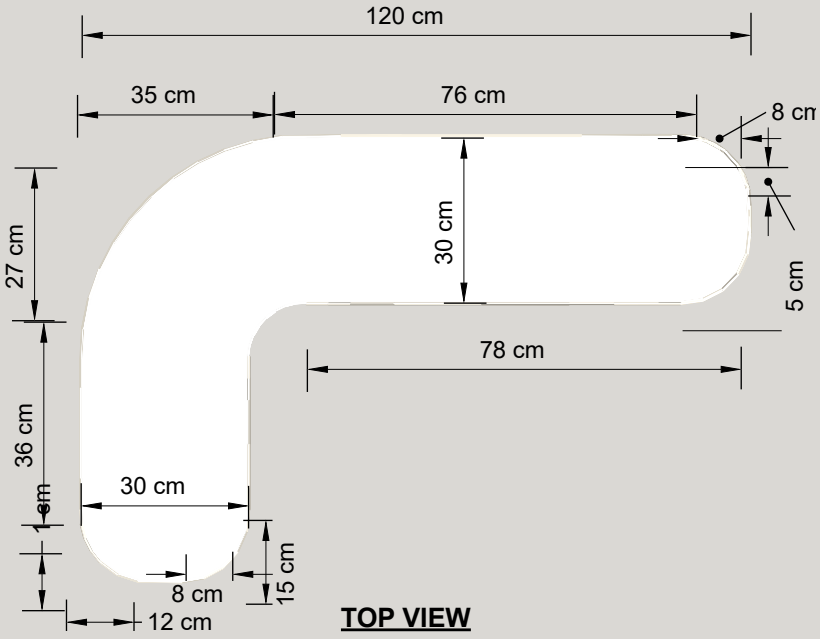

TOP VIEW

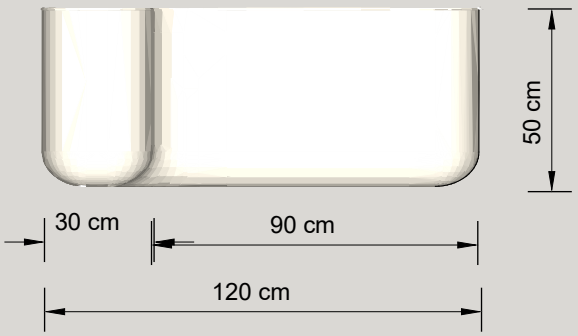

FRONT VIEW

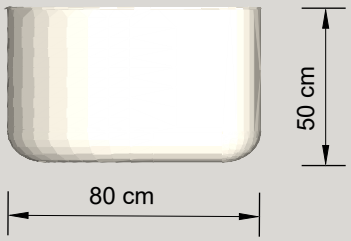

SIDE VIEW

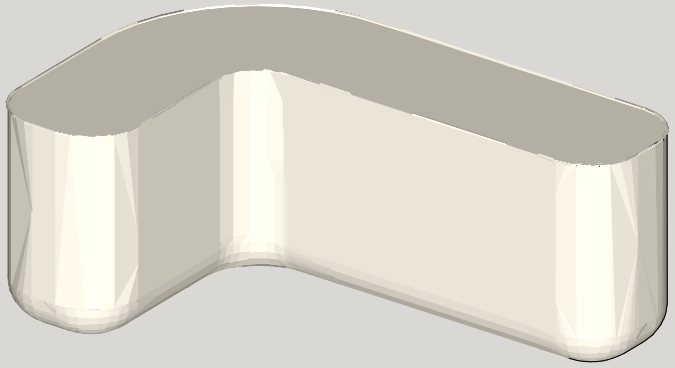

PERSPECTIVE

COMPANY NAME
ARCHITECTURE NEXT

CLIENT
ABID

PROJECT
G9 KINFRA OFFICE

PROJECT NO.
G9-1

ISSUE
11/03/26

DRAWN BY
KETH

DRAWING 1

A.7

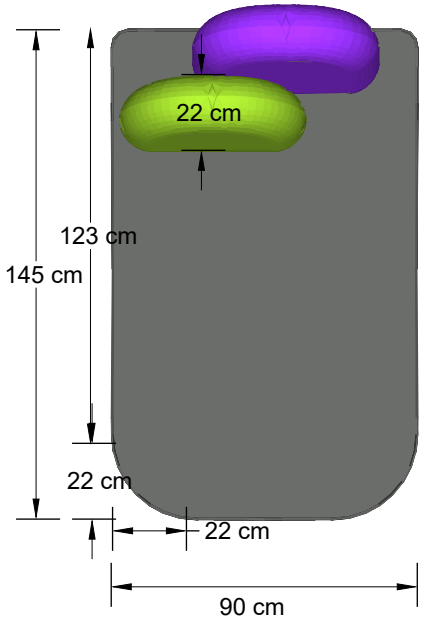

TOP VIEW

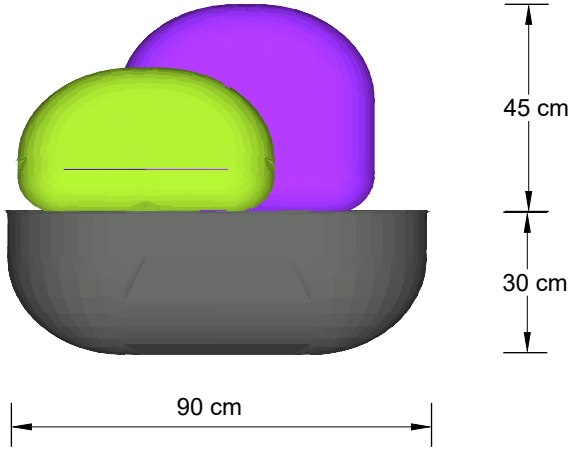

FRONT VIEW

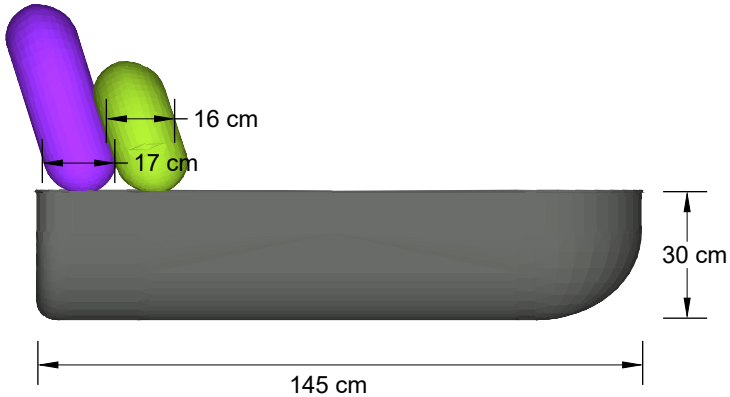

SIDE VIEW

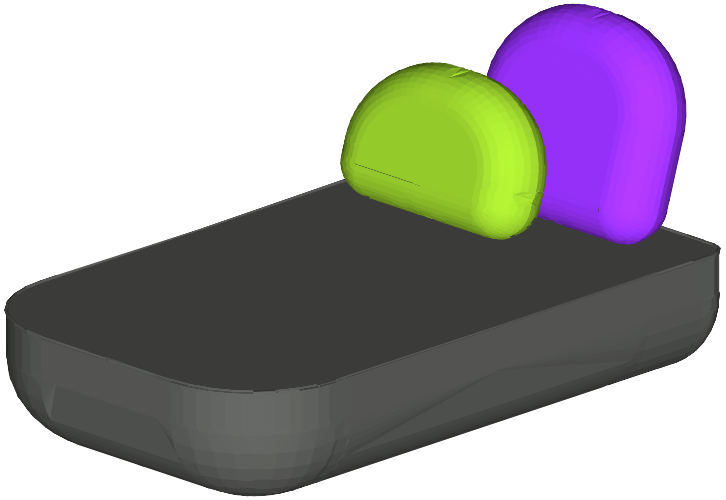

PERSPECTIVE

COMPANY NAME
ARCHITECTURE NEXT

CLIENT
ABID

PROJECT
G9 KINFRA OFFICE

PROJECT NO.
G9-1

ISSUE
11/03/26

DRAWN BY
KETH

DRAWING 2

A.7

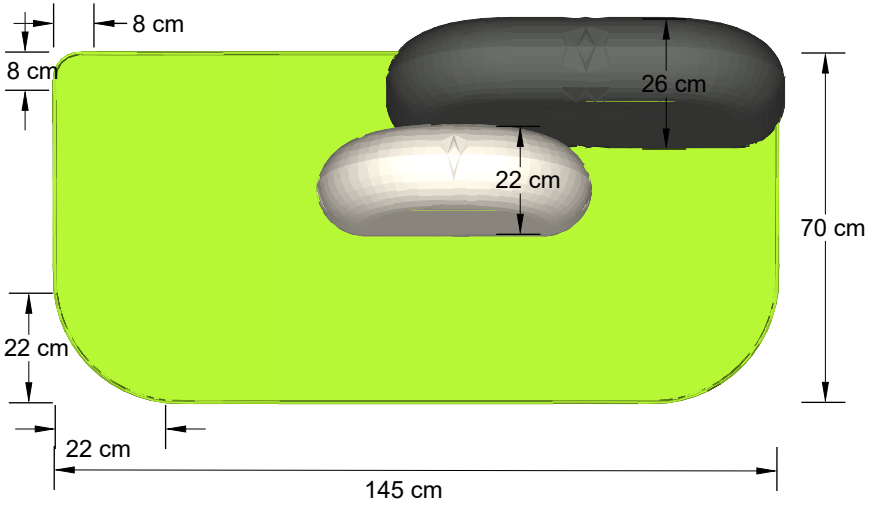

TOP VIEW

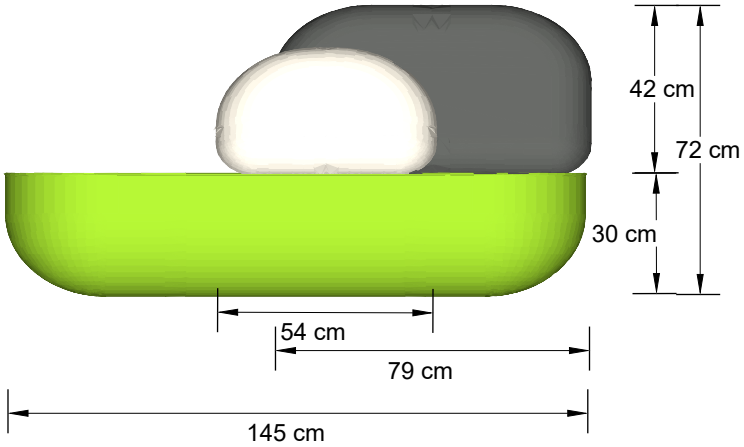

FRONT VIEW

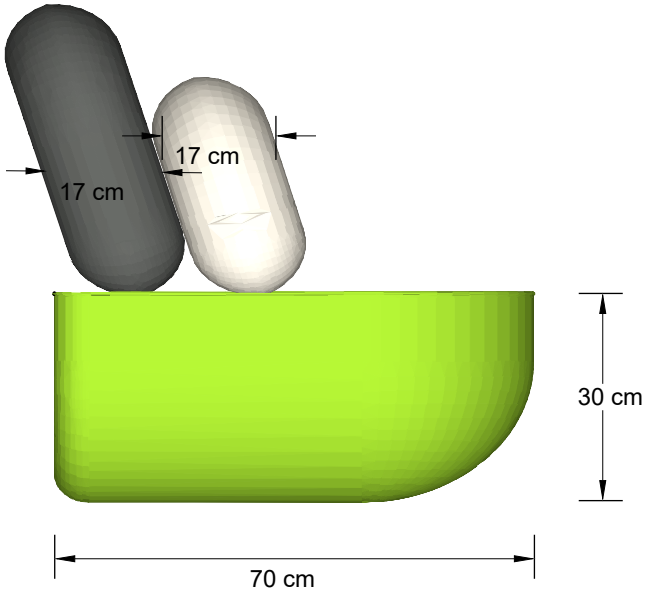

SIDE VIEW

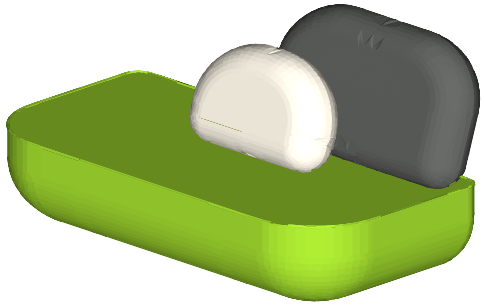

PERSPECTIVE

COMPANY NAME
ARCHITECTURE NEXT

CLIENT
ABID

PROJECT
G9 KINFRA OFFICE

PROJECT NO.
G9-1

ISSUE
11/03/26

DRAWN BY
KETH

DRAWING 3

A.7

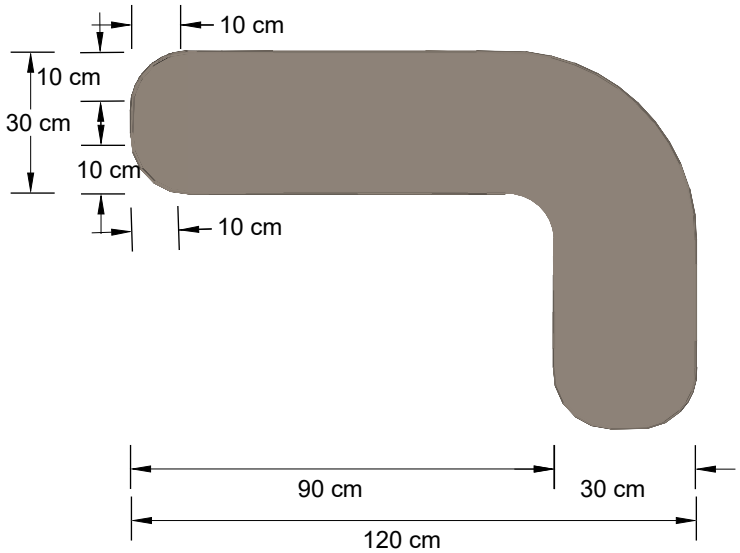

TOP VIEW

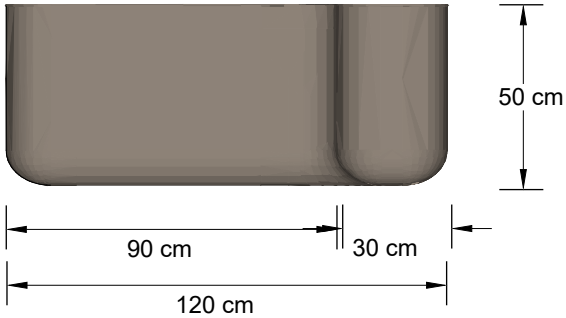

FRONT VIEW

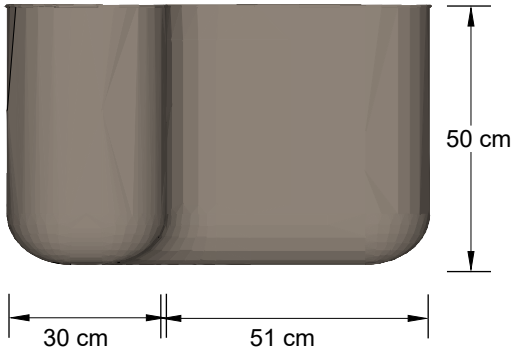

SIDE VIEW

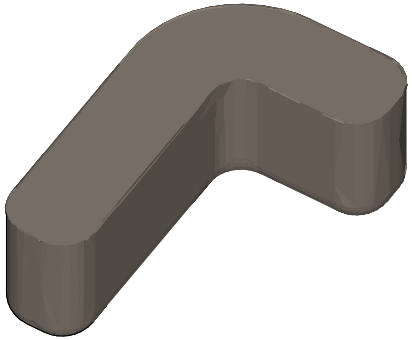

PERSPECTIVE

COMPANY NAME
ARCHITECTURE NEXT

CLIENT
ABID

PROJECT
G9 KINFRA OFFICE

PROJECT NO.
G9-1

ISSUE
11/03/26

DRAWN BY
KETH

DRAWING 4

A.7

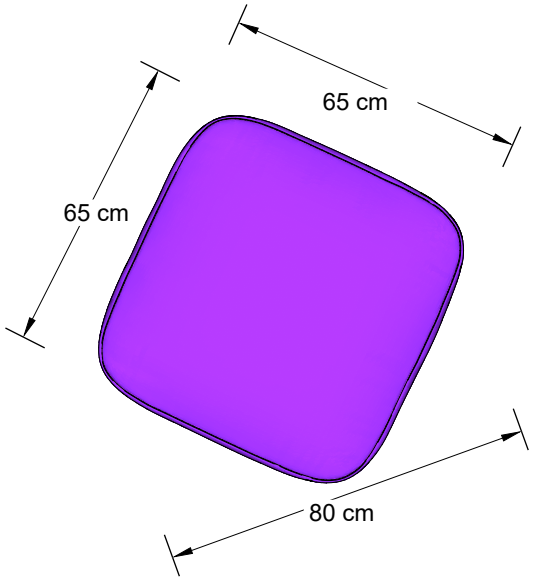

TOP VIEW

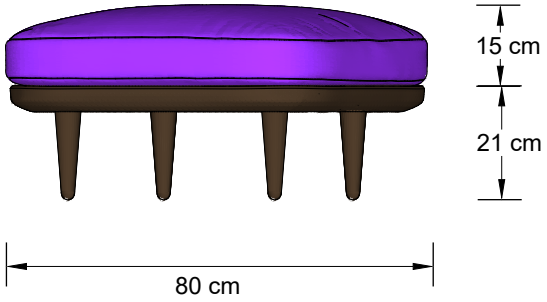

FRONT VIEW

PERSPECTIVE

COMPANY NAME
ARCHITECTURE NEXT

CLIENT
ABID

PROJECT
G9 KINFRA OFFICE

PROJECT NO.
G9-1

ISSUE
11/03/26

DRAWN BY
KETH

DRAWING 5

A.7

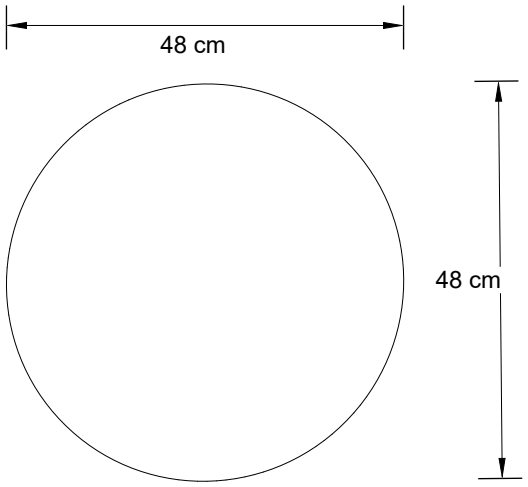

TOP VIEW

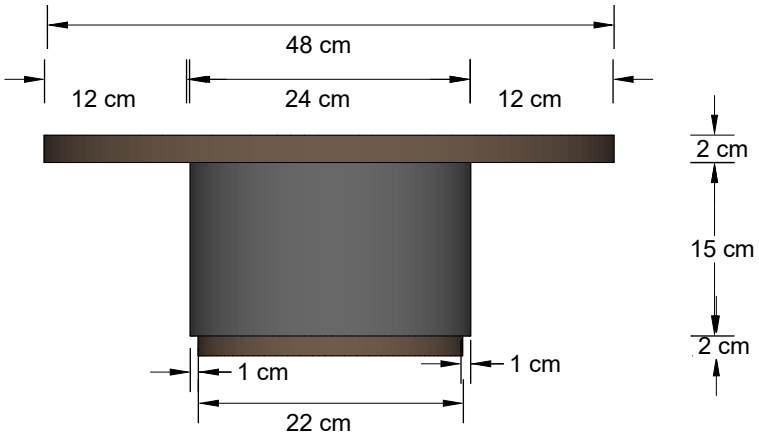

FRONT VIEW

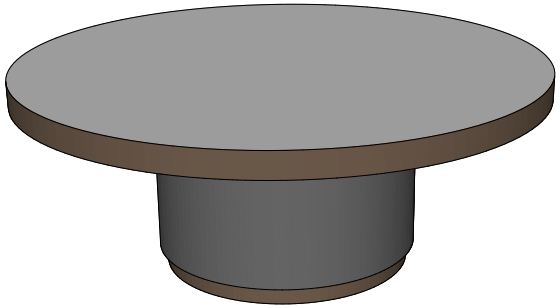

PERSPECTIVE

COMPANY NAME
ARCHITECTURE NEXT

CLIENT
ABID

PROJECT
G9 KINFRA OFFICE

PROJECT NO.
G9-1

ISSUE
11/03/26

DRAWN BY
KETH

TEAPOY

A.7