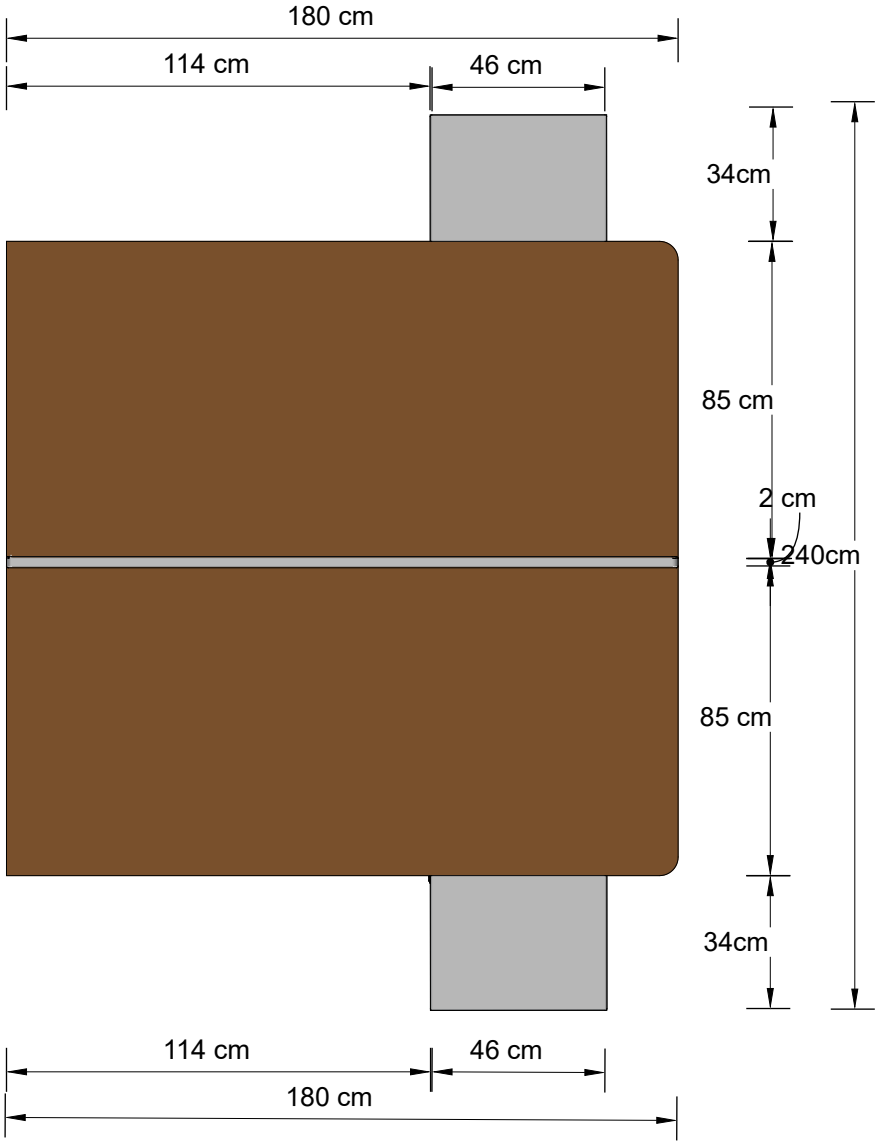

TOP VIEW

COMPANY NAME
ARCHITECTURE NEXT

CLIENT
ABID

PROJECT
G9 KINFRA OFFICE

PROJECT NO.
G9-1

ISSUE
12/03/26

DRAWN BY
KETH

WORKING
TABLE 1

A.01

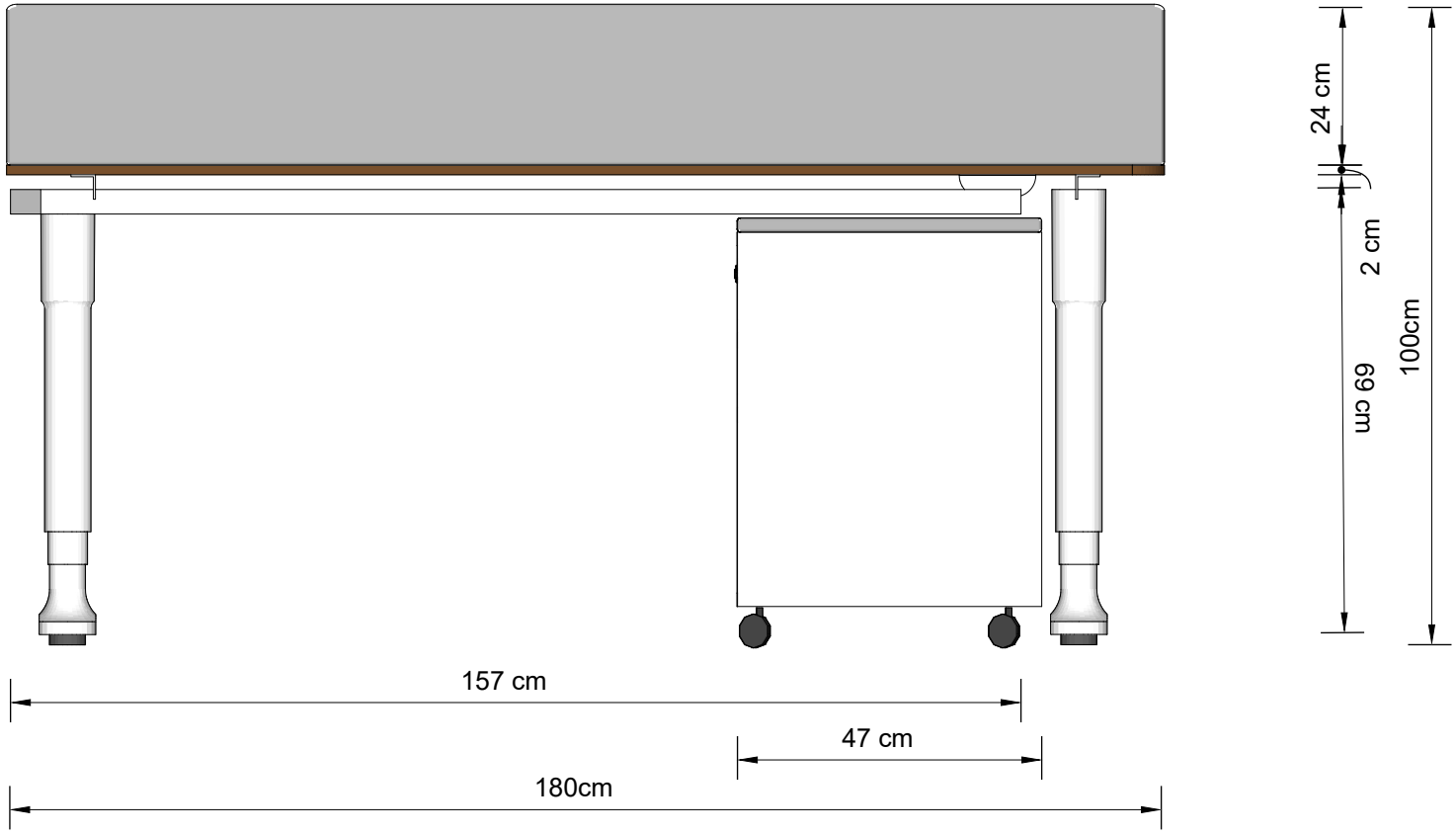

FRONT VIEW

COMPANY NAME
ARCHITECTURE NEXT

CLIENT
ABID

PROJECT
G9 KINFRA OFFICE

PROJECT NO.
G9-1

ISSUE
12/03/26

DRAWN BY
KETH

WORKING
TABLE 1

A.02

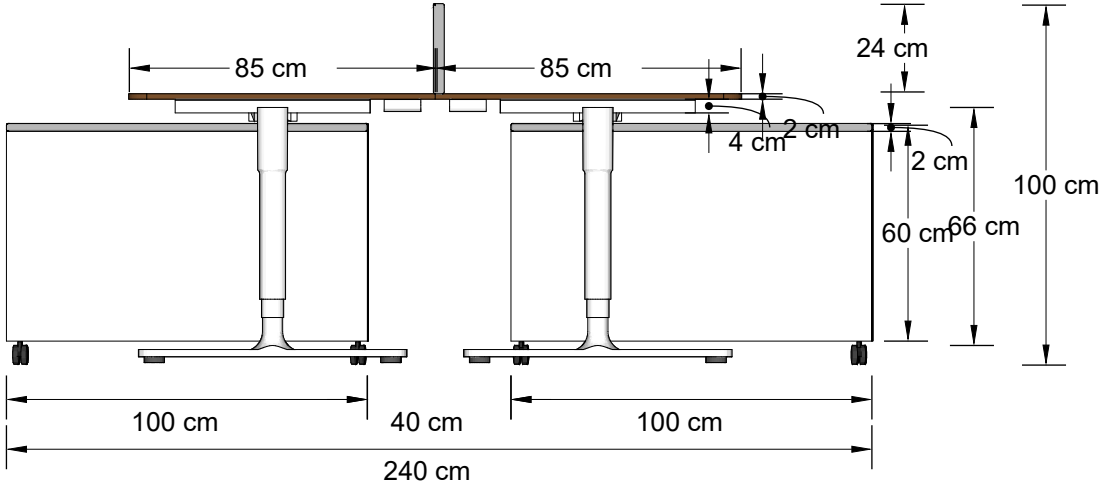

SIDE VIEW

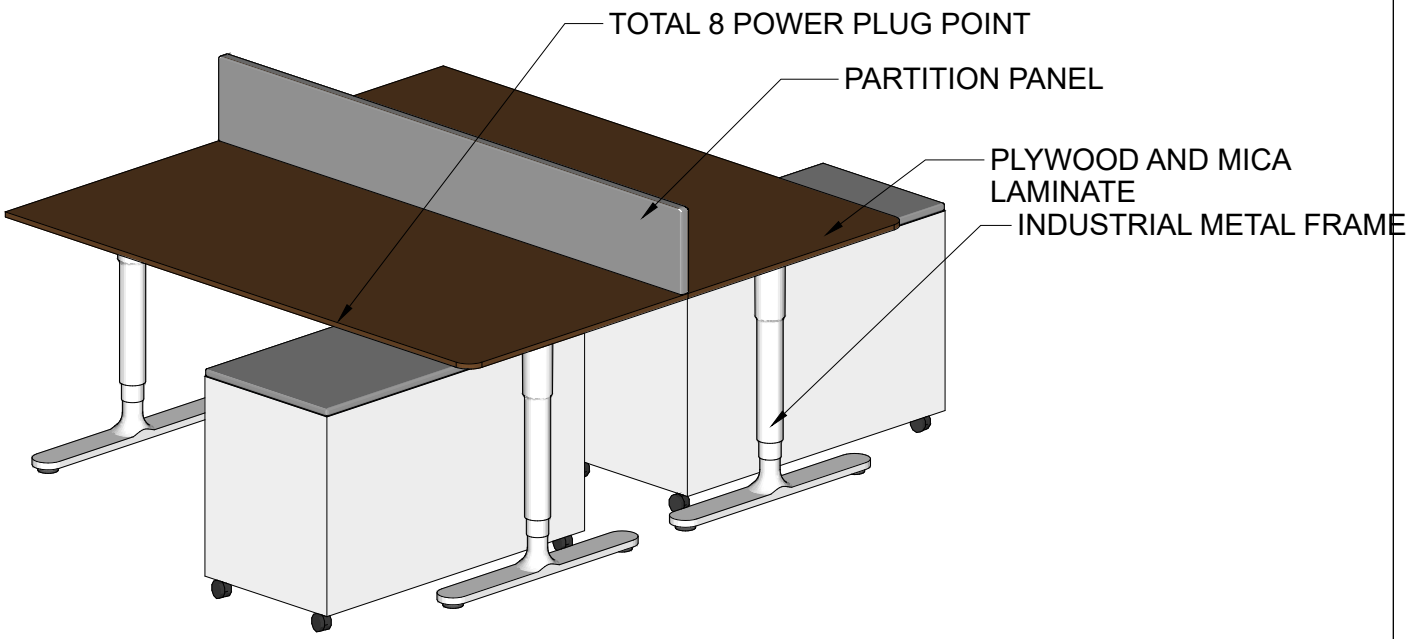

PERSPECTIVE

COMPANY NAME
ARCHITECTURE NEXT

CLIENT
ABID

PROJECT
G9 KINFRA OFFICE

PROJECT NO.
G9-1

ISSUE
12/03/26

DRAWN BY
KETH

WORKING TABLE 1

A.03

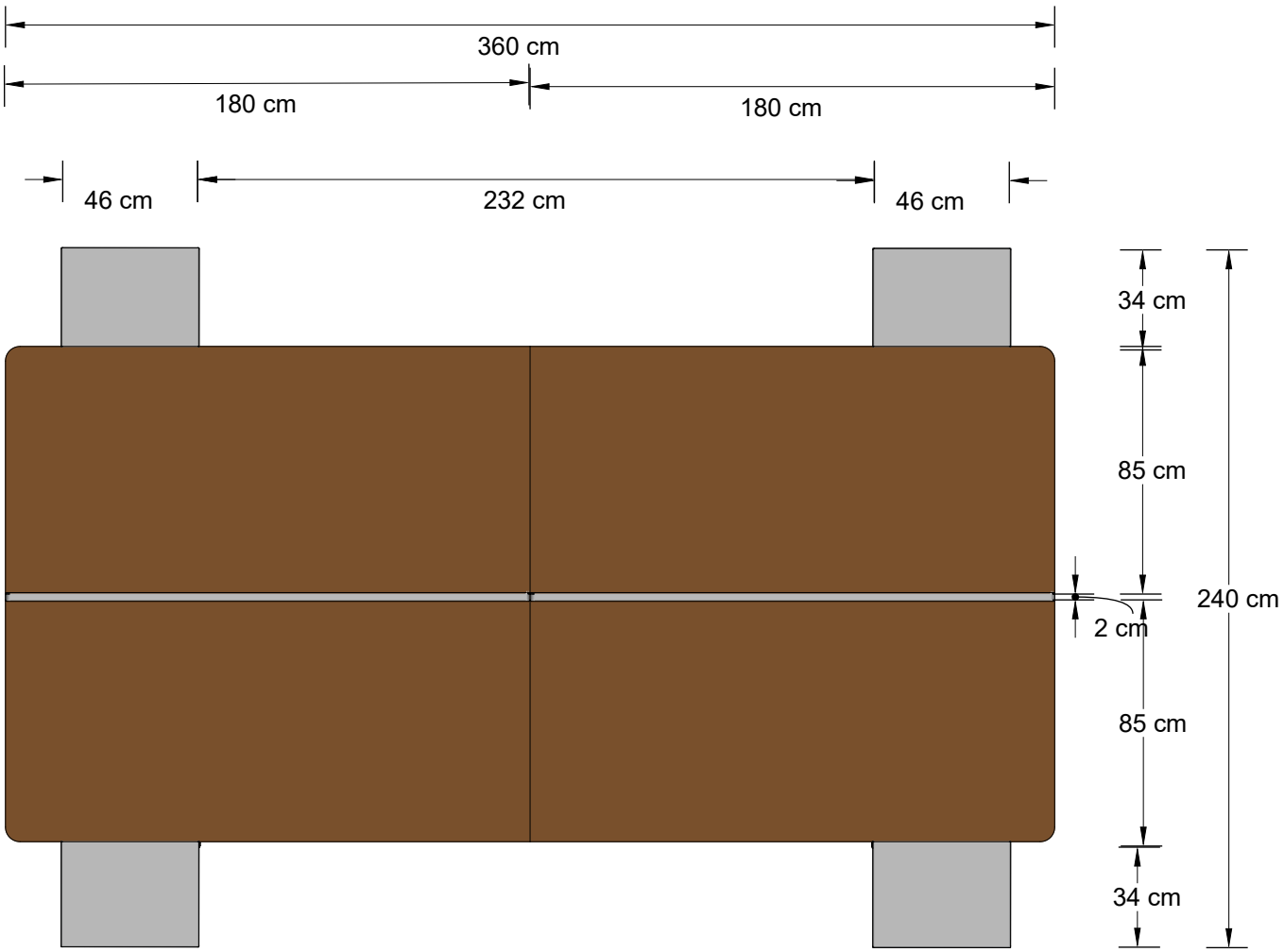

TOP VIEW

COMPANY NAME
ARCHITECTURE NEXT

CLIENT
ABID

PROJECT
G9 KINFRA OFFICE

PROJECT NO.
G9-1

ISSUE
12/03/26

DRAWN BY
KETH

WORKING
TABLE 2

A.04

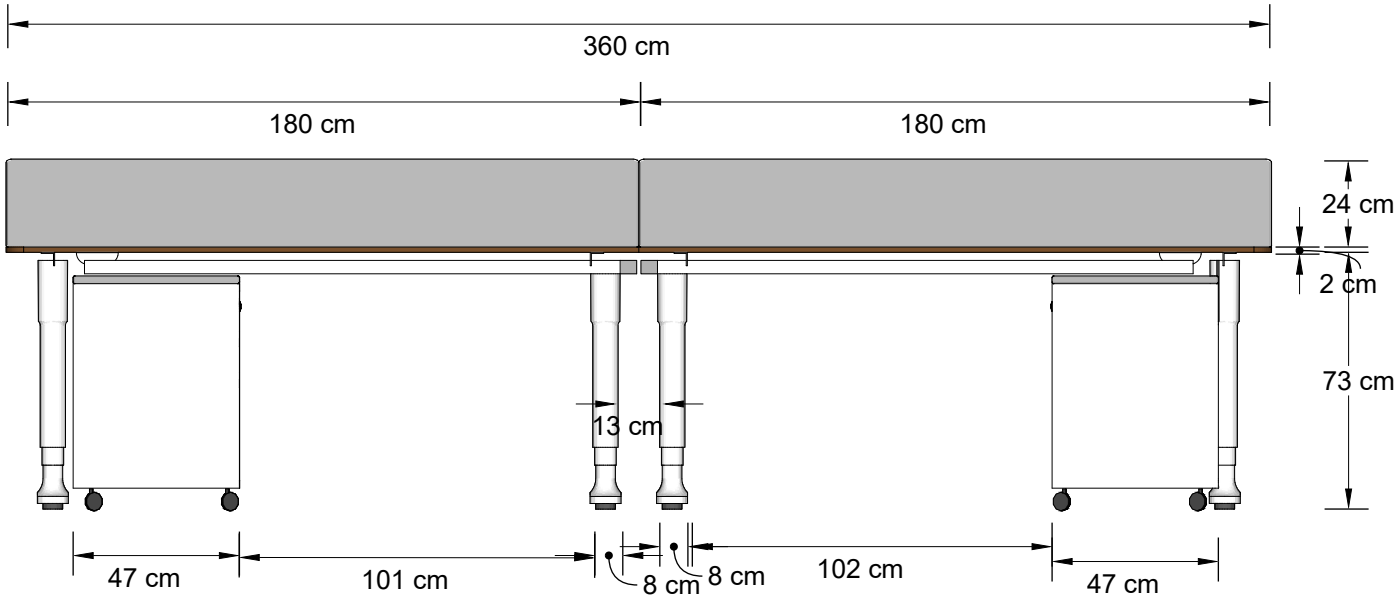

FRONT VIEW

COMPANY NAME
ARCHITECTURE NEXT

CLIENT
ABID

PROJECT
G9 KINFRA OFFICE

PROJECT NO.
G9-1

ISSUE
12/03/26

DRAWN BY
KETH

WORKING
TABLE 2

A.05

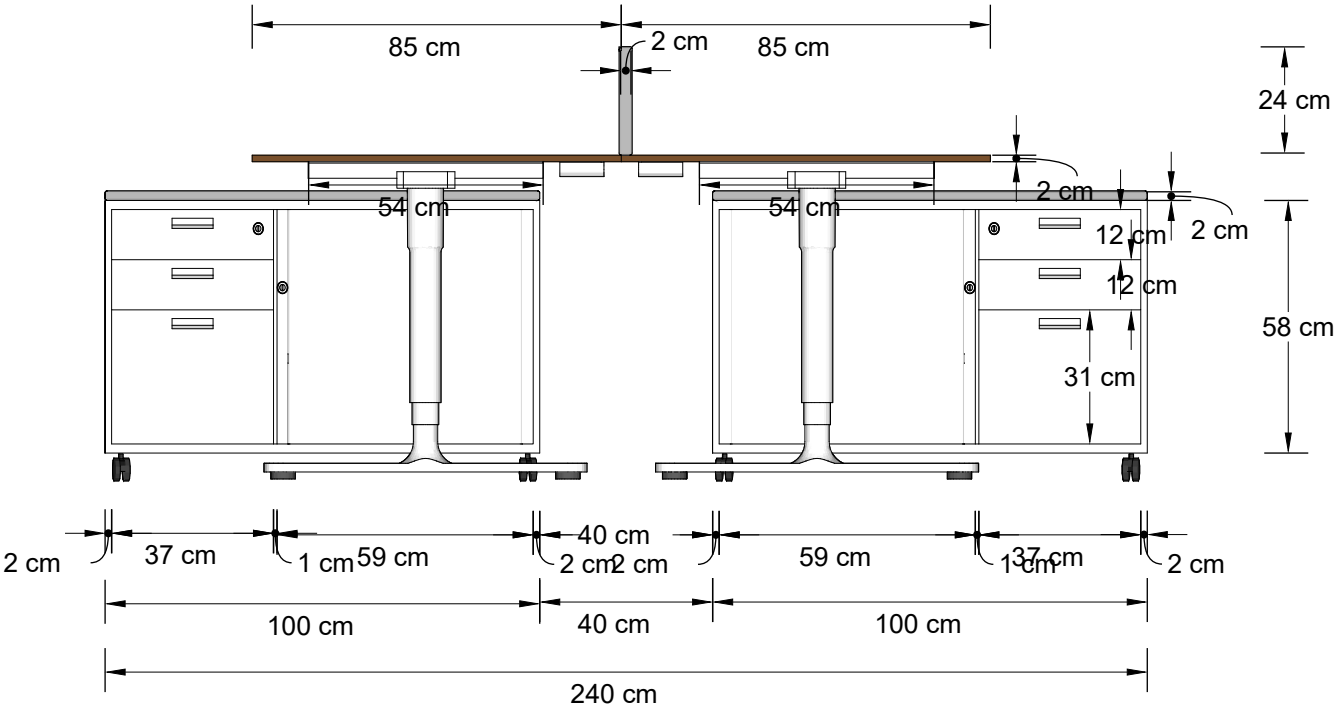

SIDE VIEW

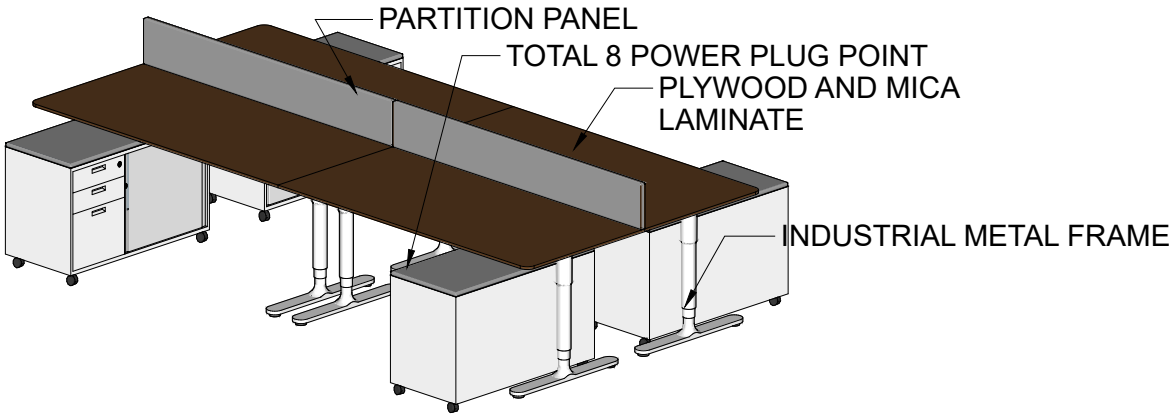

PERSPECTIVE

COMPANY NAME
ARCHITECTURE NEXT

CLIENT
ABID

PROJECT
G9 KINFRA OFFICE

PROJECT NO.
G9-1

ISSUE
12/03/26

DRAWN BY
KETH

WORKING TABLE 2

A.06