Microcontroller

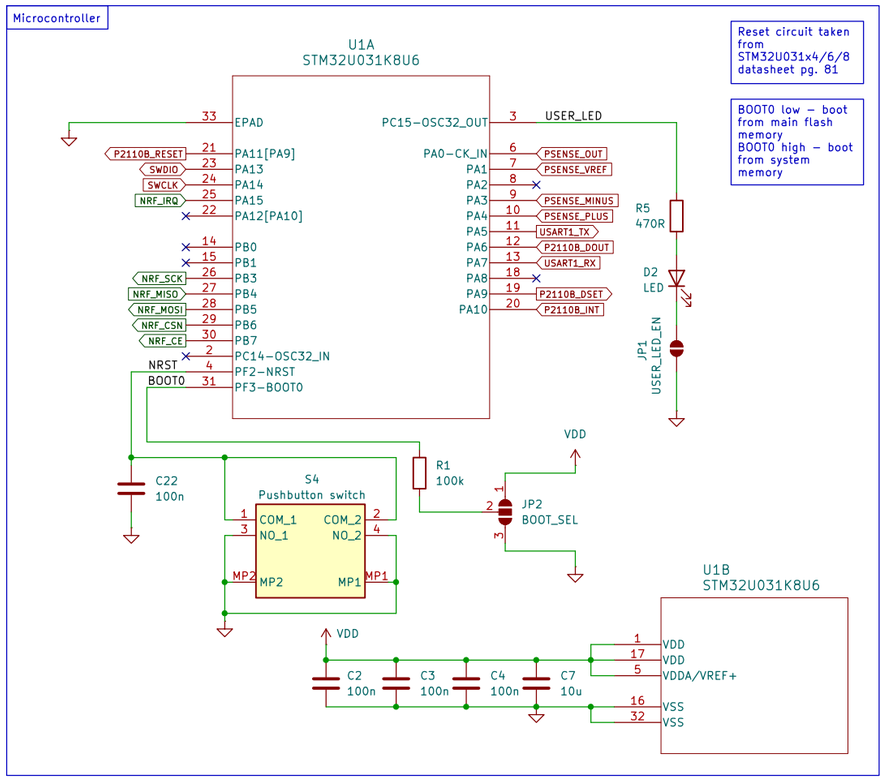

Pressure sensor & Instrumentation

An instrumentation amplifier as opposed to a difference amplifier was used since they are more accurate, they are designed for sensor interfaces, and they have adjustable gain through a single external resistor.

The voltage divider circuit is used to provide a reference voltage for the instrumentation amplifier so that the output is biased by Vdd/2. The op-amp IC is used as a buffer so that the voltage divider impedances don't affect the subtractor circuit impedances inside the instrumentation amplifier.

AD8226 gain equation is R_g = 49.4 kOhms / (G – 1).
G = 2 => R_g = 49.9kOhms
G = 5 => R_g = 12.4kOhms
G = 10 => R_g = 5.49kOhms
G = 20 => R_g = 2.61kOhms

Voltage resolution of a 12-bit ADC @ 3.3V is 3.3/(2^12) = 0.805mV

Lower resistances in the voltage divider circuit result in increased power draw. Higher resistances result in increased susceptability to noise. Aiming for 0.1mA to 0.5mA of current draw since average power consumption of the sensor node @ 3.3V is ~6mA.

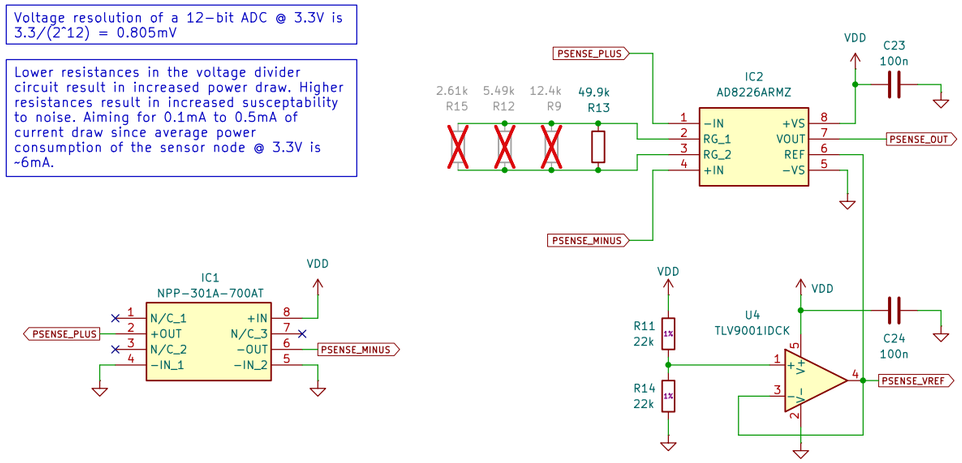

Powercast

DSET (digital in) –> enables measurement of harvested power.
INT (digital out) –> indicates voltage present at Vout.
RESET (digital in) –> set to disable Vout.
DOUT (digital out) –> analog voltage level corresponding to harvested power.

Powercast datasheet suggests trace width of 50mils (1.27mm) and spacing between trace and GND of 9mils (0.23mm) for a board thickness of 62mils to ensure 50ohm feedline.

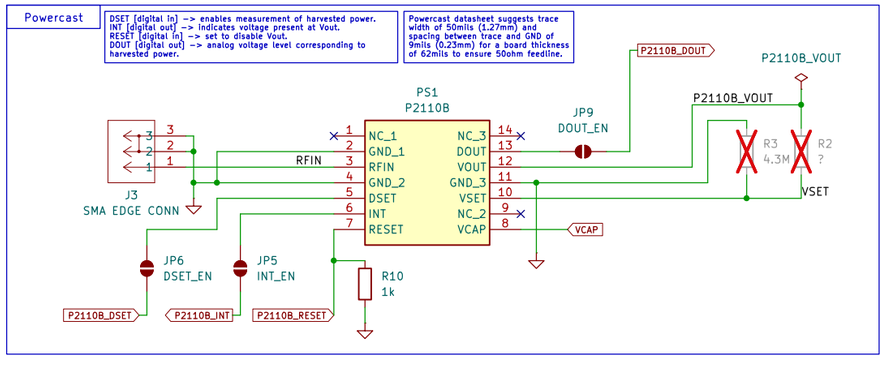

Capacitor configuration

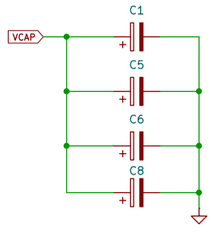

Test points

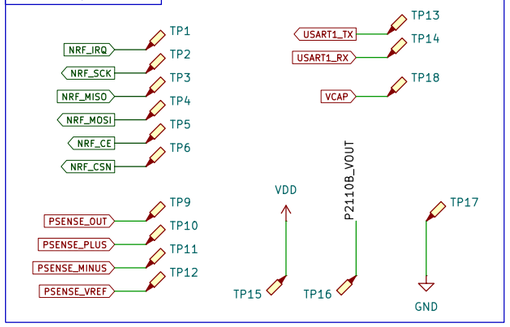

Mounting holes

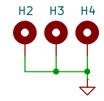

nRF24L01+

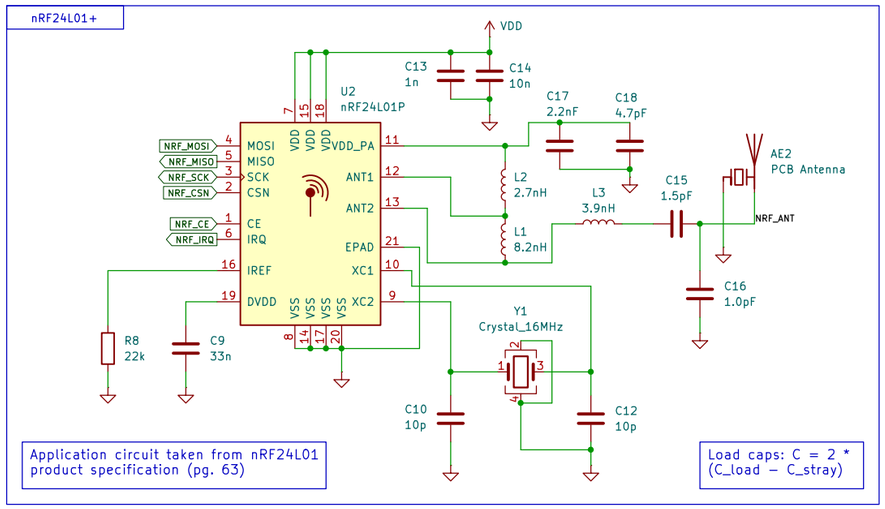

Power multiplexing

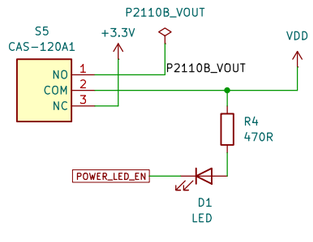

Debug and UART header
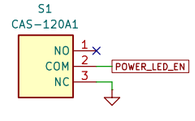
Configuration switches