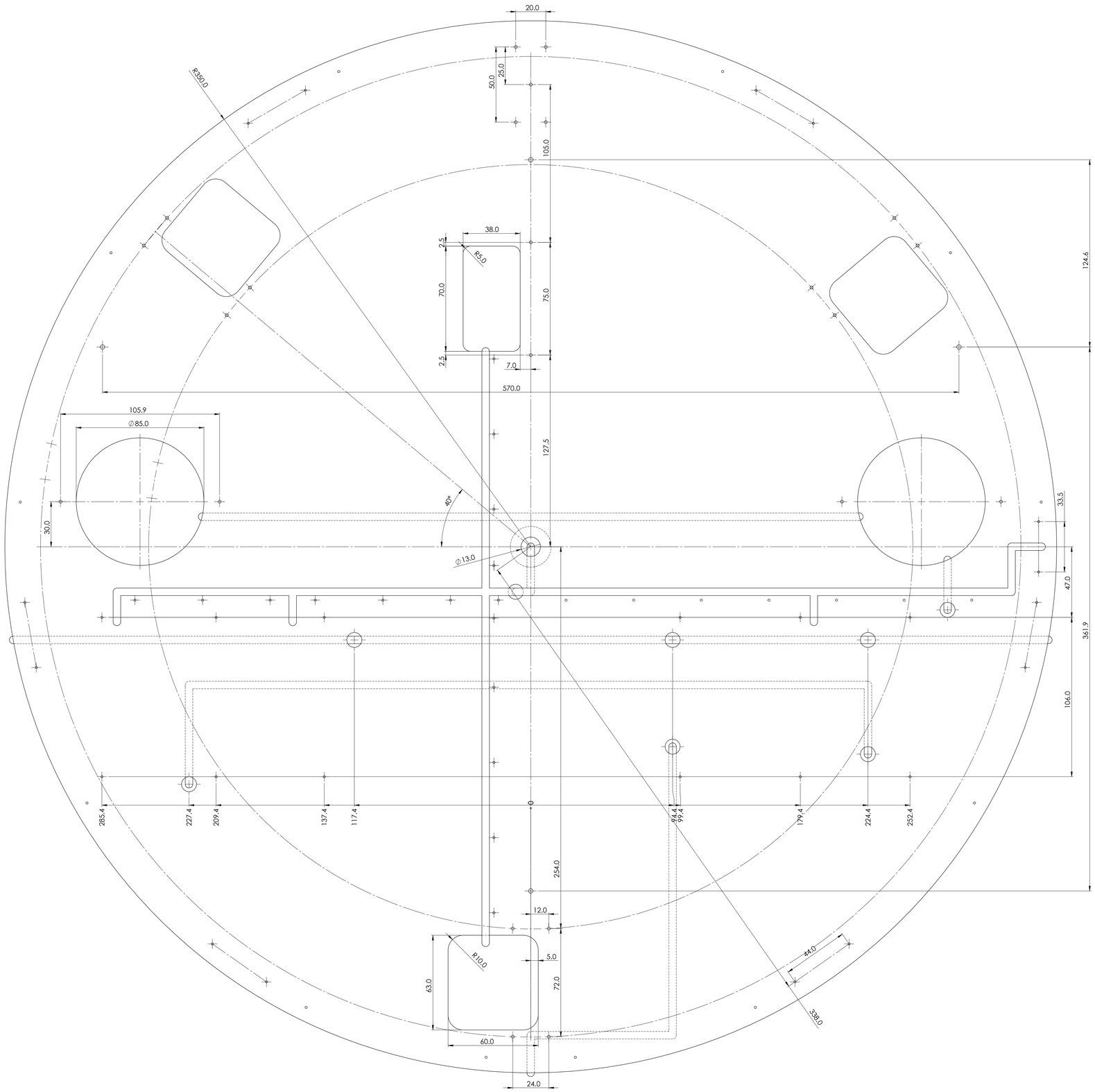

Drawing name: Backplate
Paper size: A0
Scale: 1:1