USB-C CONNECTOR

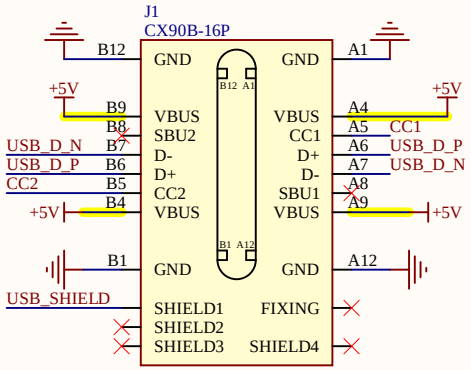

QR1
QR CODE 4x4mm

TOP VIEW

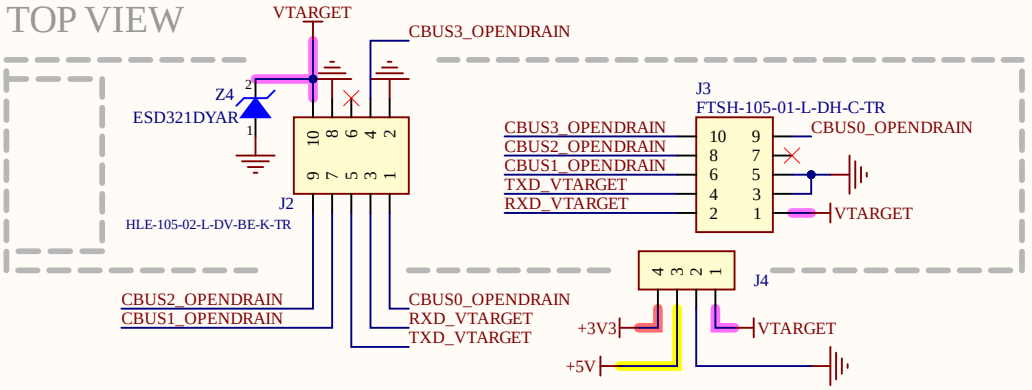

ESD protection

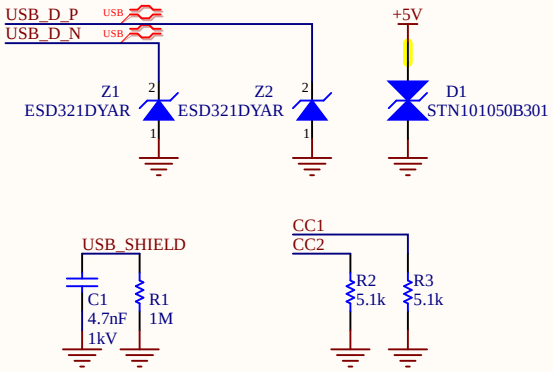

FTDI CHIP

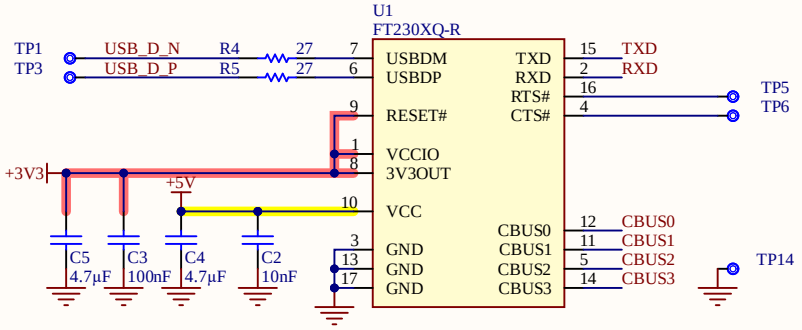

LEVEL TRANSLATOR

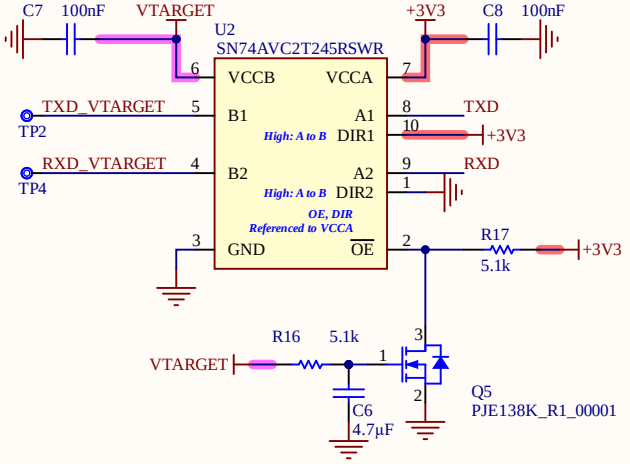

LEDS

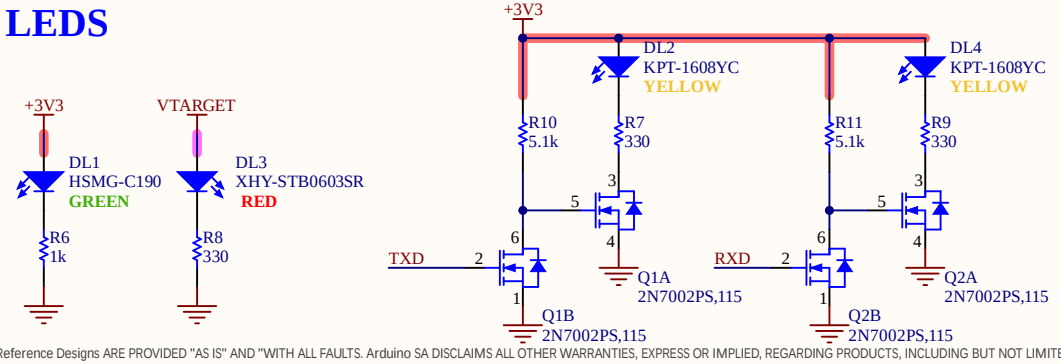

FTDI GPIO MOSFETS FOR OPEN DRAIN

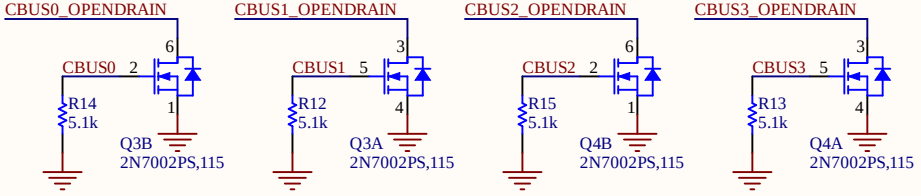

Reference Designs ARE PROVIDED "AS IS" AND "WITH ALL FAULTS. Arduino SA DISCLAIMS ALL OTHER WARRANTIES, EXPRESS OR IMPLIED, REGARDING PRODUCTS, INCLUDING BUT NOT LIMITED TO, ANY IMPLIED WARRANTIES OF MERCHANTABILITY OR FITNESS FOR A PARTICULAR PURPOSE.
Arduino SA may make changes to specifications and product descriptions at any time, without notice. The Customer must not rely on the absence or characteristics of any features or instructions marked "reserved" or "undefined". Arduino SA reserves these for future definition and shall have no responsibility whatsoever for conflicts or incompatibilities arising from future changes to them. The product information on the Web Site or Materials is subject to change without notice.
Do not finalize a design with this info. ARDUINO and other Arduino brands and logos and Trademarks of Arduino SA. All Arduino SA Trademarks cannot be used without owner's formal permission.

Title: TOP			
ID: ABX00156		Version: V0.6	
Date: 2/27/2026	Time: 8:52:59 AM	Sheet 1 of 1	
File: TOP.SchDoc		Author: Silvio Navaretti	RevAuthor: Daniela Catanzaro

CC BY SA

ARDUINO