ELEC ENG 2EI4
Electronic Circuits

Project 1

Areeba Irfan - irfana20 - 400378045

C01 - Yaser Haddara

February 12, 2023

Table of Contents

Summary and Design **2**

Measurement and Analysis **5**

Simulation **7**

Discussion **9**

References **10**

Summary and Design

Summary:

The objective of this project is to create a DC power supply that provides 10 mA of current at 3V ± 0.1V from a source that is 120 volts (rms) at 1 kHz. The design will mimic a center tapped rectifier and feature a voltage source that connects to a transformer. The transformer is responsible for adjusting the voltage to a suitable level. The output of the transformer is then sent to a rectifier that transforms the alternating current into a direct current. The filter will then be used to produce a smoother current by diminishing any ripples. If required, a regulator may be used to ensure that a consistent current is being produced. The voltage at the output of the transformer must be high enough so that the desired DC output is still obtained after the rectification and filtering process.

Transformer:

The first block in a DC power supply is the transformer. A transformer is made up of two separate coils wound around a magnetic core, which facilitates the magnetic coupling of the two windings. The transformer lowers the high AC voltage from the main source to a lower AC voltage level. In this case, the input voltage will be 3.7V. The turns ratio of the transformer will be 44:1.

Rectifier:

For this project, a center tapped rectifier was implemented. The rectifier consists of two diodes. Diode ‘D1’, is connected to the positive terminal of the first voltage source, while the diode ‘D2’ is connected to the negative terminal of the second voltage source. For the positive half cycle, D1 is forward biased, while D2 is reverse biased. The current flows through D1 to the filter and load resistor. During the negative half cycle, D2 is forward biased, while D1 is reverse biased. This time, the current flows through D2 to the filter and through the load resistor.

Filter:

To create a smooth DC voltage, a filter is incorporated in the rectifier design. When the rectifier is conducting, the capacitor charges up to the peak voltage of the rectified AC voltage waveform. When the rectifier is not conducting, the capacitor discharges through the load resistor, providing a steady DC voltage. The capacitor value used for this circuit was 100 uF

Regulator:

A regulator can be incorporated into the center tapped circuit rectifier to maintain the constant output DC voltage and current. When implementing the design, the produced voltage and current were relatively consistent, therefore a regulator was not used.

Circuit Schematic:

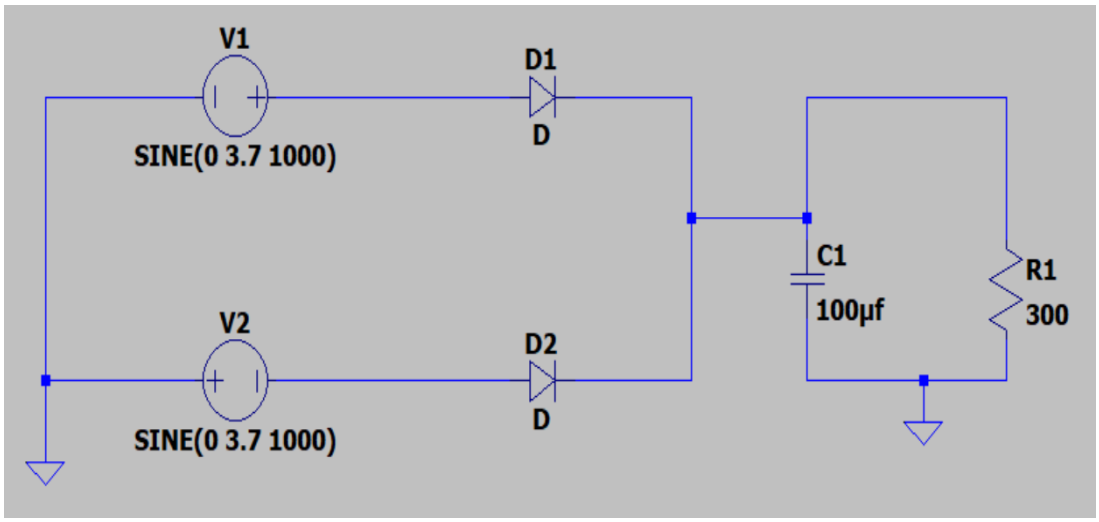

Calculations:

the average (or DC component) of the output voltage :

$$V_{DC} = V_{max} - V_D$$

$$V_{max} = V_{DC} + V_D$$

$$= 3V + 0.7V$$

$$= 3.7V$$

$$\boxed{V_{max} = 3.7V}$$

the peak-to-peak ripple voltage :

$$V_r = \frac{I_{Load}}{fC}$$

$$C = \frac{I_{Load}}{V_r f}$$

$$= \frac{0.01}{0.1 \times 1000}$$

$$= 100\ \mu F$$

$$\boxed{C = 100\mu F}$$

the final current delivery :

$$I_{Load} = \frac{V_{DC}}{R_{Load}}$$

$$R_{Load} = \frac{V_{DC}}{I_{Load}}$$

$$= \frac{3V}{0.01}$$

$$= 300\Omega$$

$$\boxed{R_{Load} = 300\Omega}$$

Expected Performance:

Based on the design and calculations, the circuit is expected to deliver 10 mA at 3V ± 0.1V with an initial input of 3.7V

Design Tradeoffs:

A center tapped rectifier is a simple and cost-effective way to convert AC to DC, but it is not very efficient because half of the AC voltage is lost across the diodes. It is also limited in its ability to handle high currents, and is not suitable for high-power applications.

Another tradeoff is the use of a larger capacitor. A larger capacitance means a larger current on the rectifier. In this case, the 100 uF capacitor produced a straighter DC voltage waveform, and was therefore deemed more important.

Measurement and Analysis

Circuit Implementation:

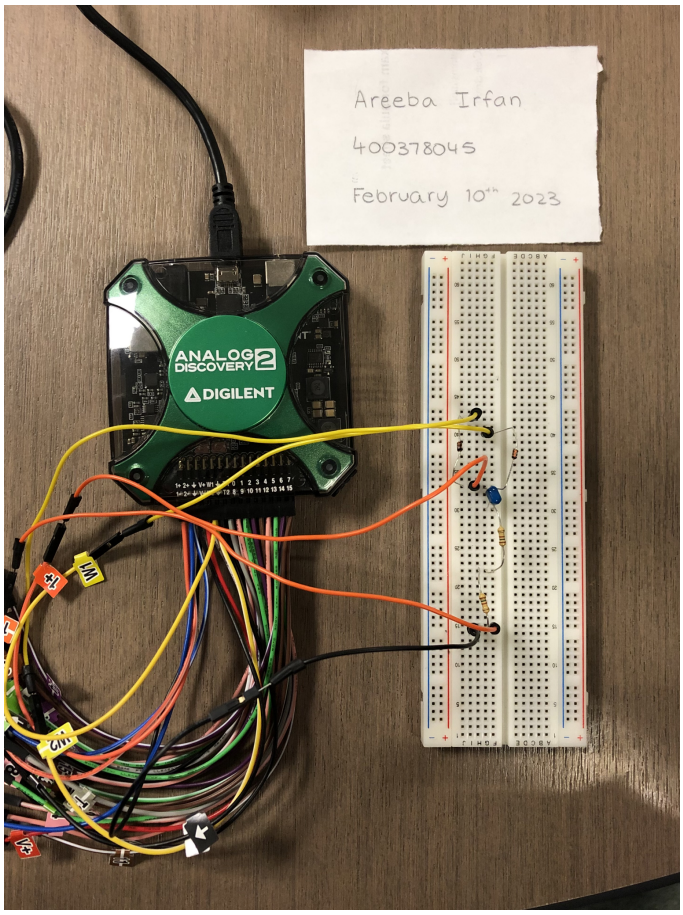

Measurement Procedure:

The oscilloscopes on the Analog Discovery 2 were used to measure the voltage across the filter and load resistor. This voltage reflected the DC voltage outputted by the rectifier circuit. To determine the current, a math channel was added, which took the first channel's voltage and divided it by 300 Ω. This reflected the current at the DC voltage. The values outputted on the oscilloscope determined that the rectifier was successful as the values were in a decent range of 10mA at 3V delivery.

Key Measurement Results:

	Voltage (V)	Current (mA)
Average	3.044	10.15
Max	3.05	10.20

Waveform Output:

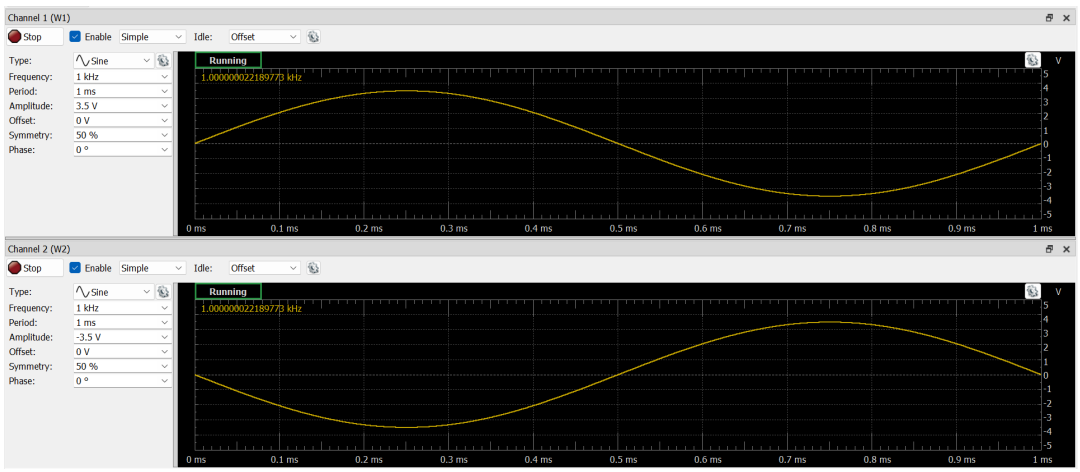

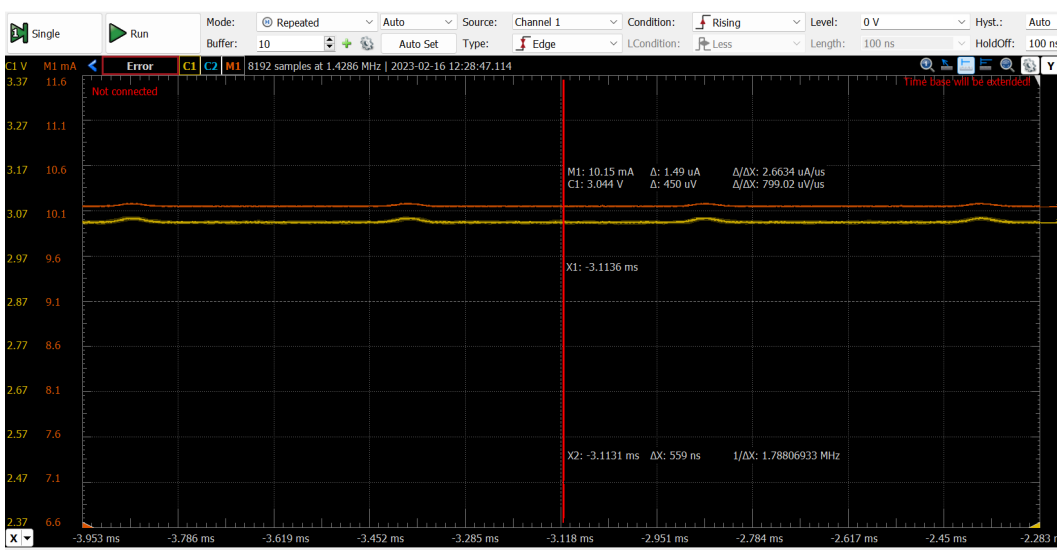

Simulation

Circuit Schematic:

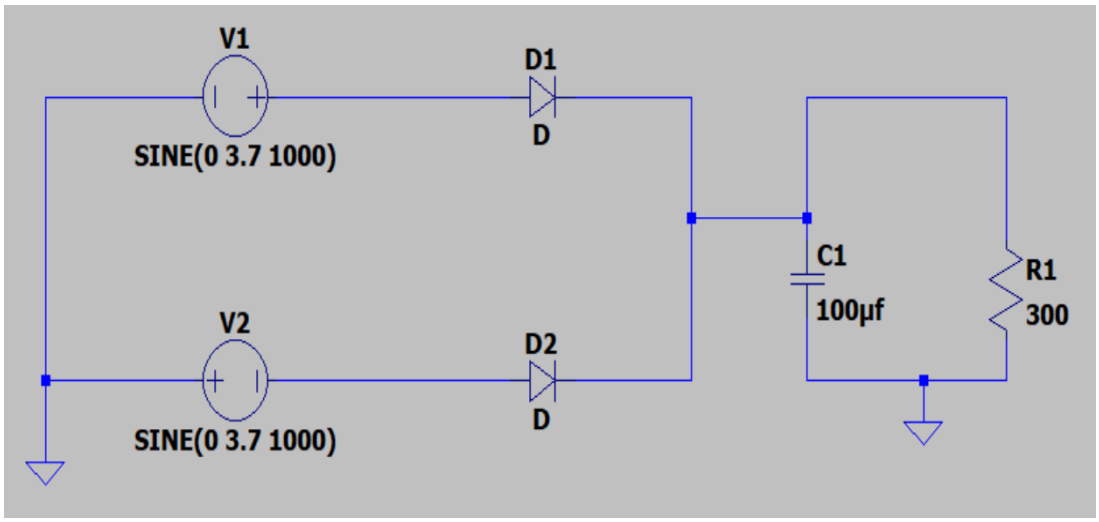

Netlist:

```
* C:\Users\Areeba\Desktop\winter 2023\2EI4\Draft1.asc
V1 N001 0 SINE(0 3.7 1000)
V2 0 N003 SINE(0 3.7 1000)
D1 N001 N002 D
D2 N003 N002 D
C1 N002 0 100µf
R1 N002 0 300
.model D D
.lib C:\Users\Areeba\AppData\Local\LTspice\lib\cmp\standard.dio
.tran 0 0.5 0
.backanno
.end
```

Simulation conditions:

The type of simulation chosen was the transient simulation. The simulation runs until 500 ms.

Simulation Output:

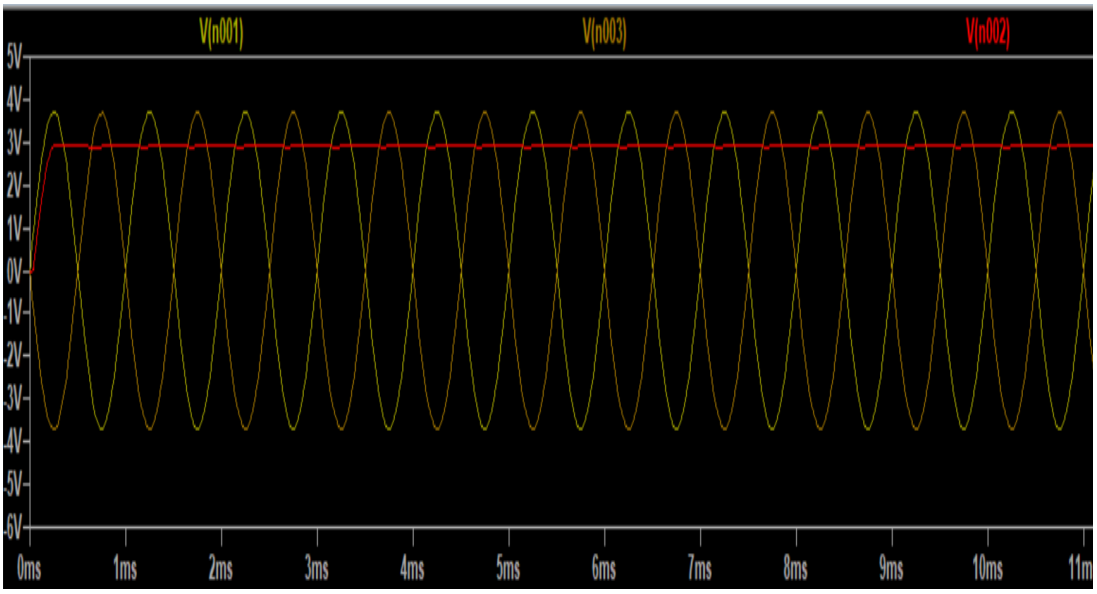

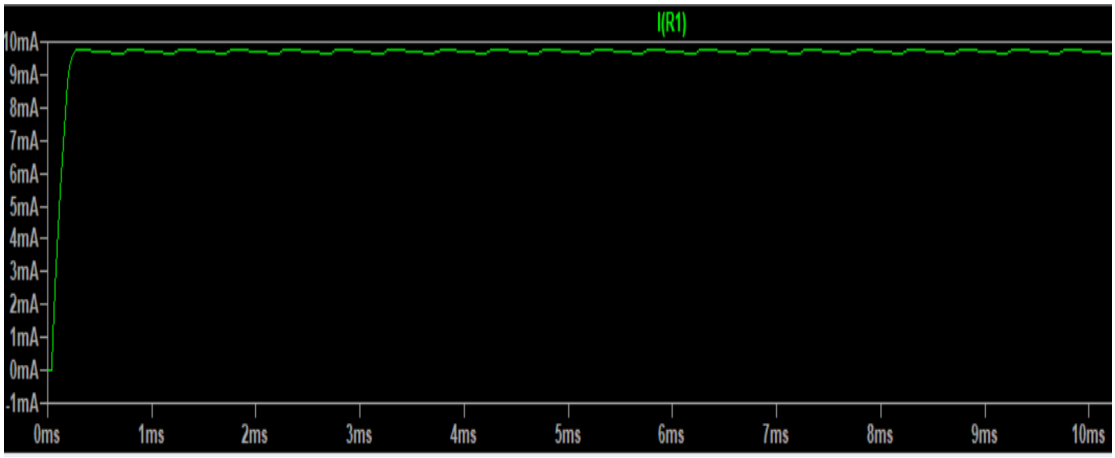

Discussion

Result Comparisons:

Once again, the expected performance of the circuit was to deliver 10mA at 3V ± 0.1V. The simulation that was performed in LTSpice matched these results and successfully applied the expected delivery within a reasonable range (about 9.8 mA at 3V). The circuit measurement using the Analog Discovery 2 was also deemed successful. The oscilloscope displayed a final delivery of about 10.15 mA at 3.044V. Both the simulation and measurement were in reasonable range of the initial requirements.

Discrepancies Observed:

When observing both the simulation in LTSpice and the oscilloscope from the Analog Discovery 2, it could be seen that there were still some ripples in both the current and voltage. This could be fixed by implementing a regulator within the circuit to ensure that the voltage is consistent.

Limitations:

Design limitations include the efficiency of the circuit. The center-tapped rectifier is less efficient than other rectifier applications. The center-tapped rectifier dissipates more power in the transformer and the rectifier diodes, resulting in lower efficiency and potentially higher cost for heat dissipation components.

Noise interference was a measurement limitation in this project. Since some ripples were observed on the oscilloscope from the Analog Discovery 2, it is possible that the ripples were caused by noise interference, affecting the output of the results.

Problems Encountered:

When implementing on the Analog Discovery 2, the voltage had to be adjusted to 3.5 to provide more accurate results. This could be due to a number of reasons. For instance, there is always some internal tolerance within all the components used. The calculations and simulation initially performed uses ideal components and does not consider any tolerances which could explain the slightly varying voltage.

References

Center-tapped full-wave rectifier operation - electronics tutorials. CircuitBread. (2021, July 7). Retrieved February 16, 2023, from https://www.circuitbread.com/tutorials/center-tapped-full-wave-rectifier-operation

Fawad. (n.d.). *The center-tapped full-wave rectifier*. D&E Notes. Retrieved February 17, 2023, from https://www.daenotes.com/electronics/devices-circuits/center-tapped-full-wave-rectifier#:~:text=A%20center%2Dtapped%20rectifier%20is,to%20the%20center%2Dtapped%20secondary.