Bathroom Render

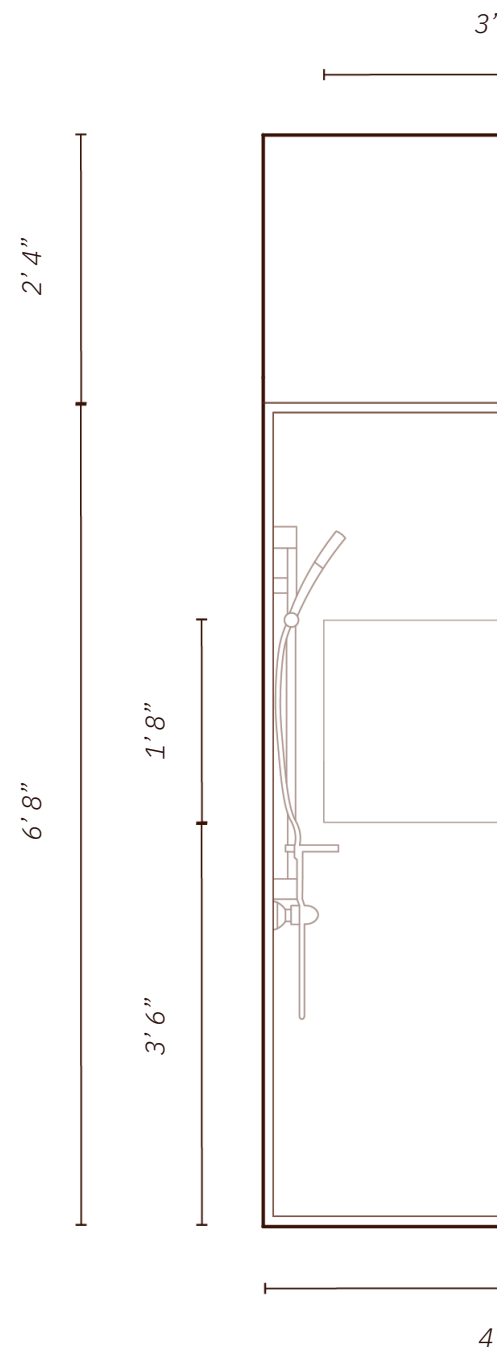

Bathroom Elevation 01