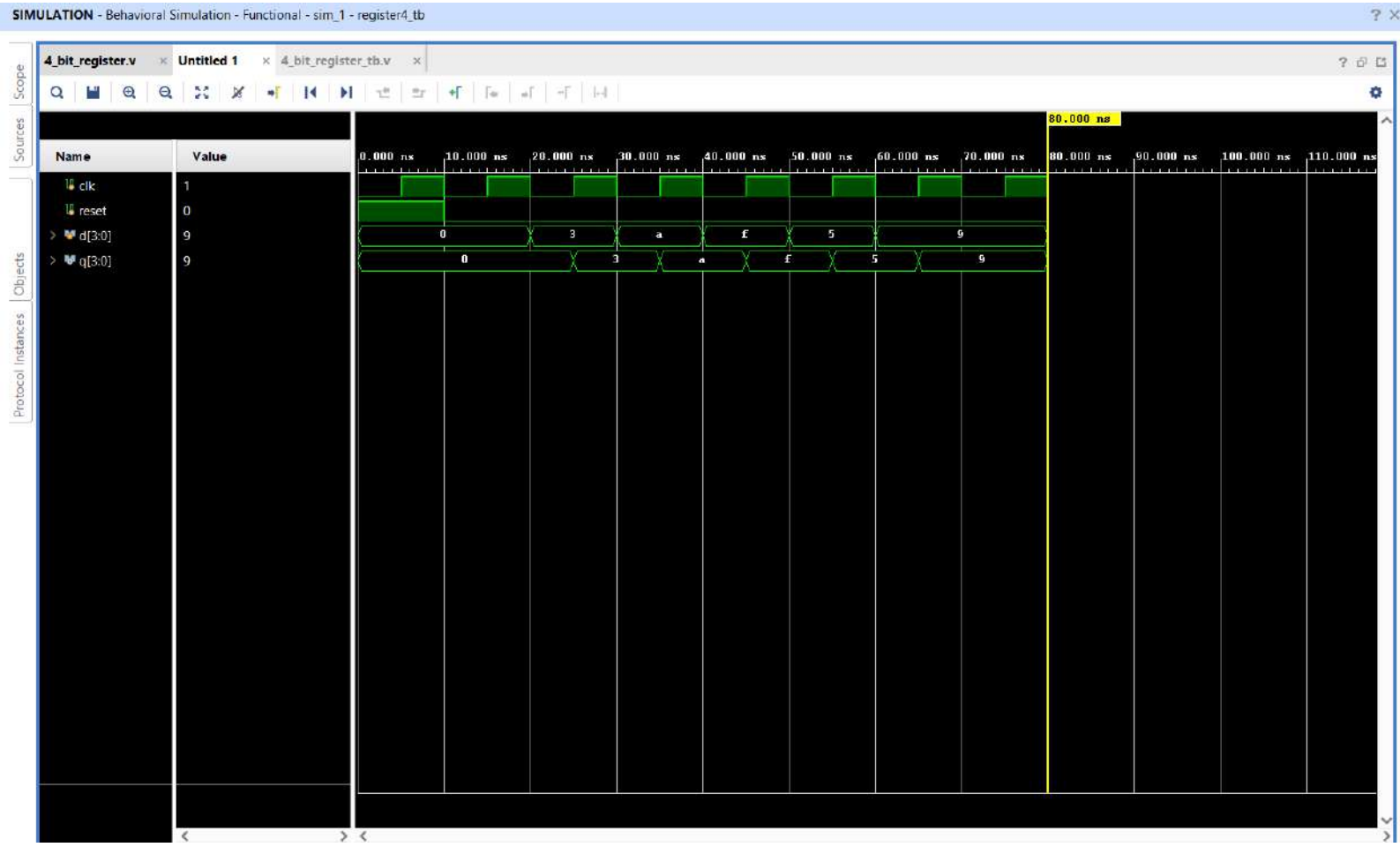
SIMULATION - Behavioral Simulation - Functional - sim_1 - register4_tb
4_bit_register.v
Untitled 1
4_bit_register_tb.v
Scope
Sources
Objects
Protocol Instances
Name
Value
clk
1
reset
0
d[3:0]
9
q[3:0]
9
0.000 ns
10.000 ns
20.000 ns
30.000 ns
40.000 ns
50.000 ns
60.000 ns
70.000 ns
80.000 ns
90.000 ns
100.000 ns
110.000 ns
80.000 ns

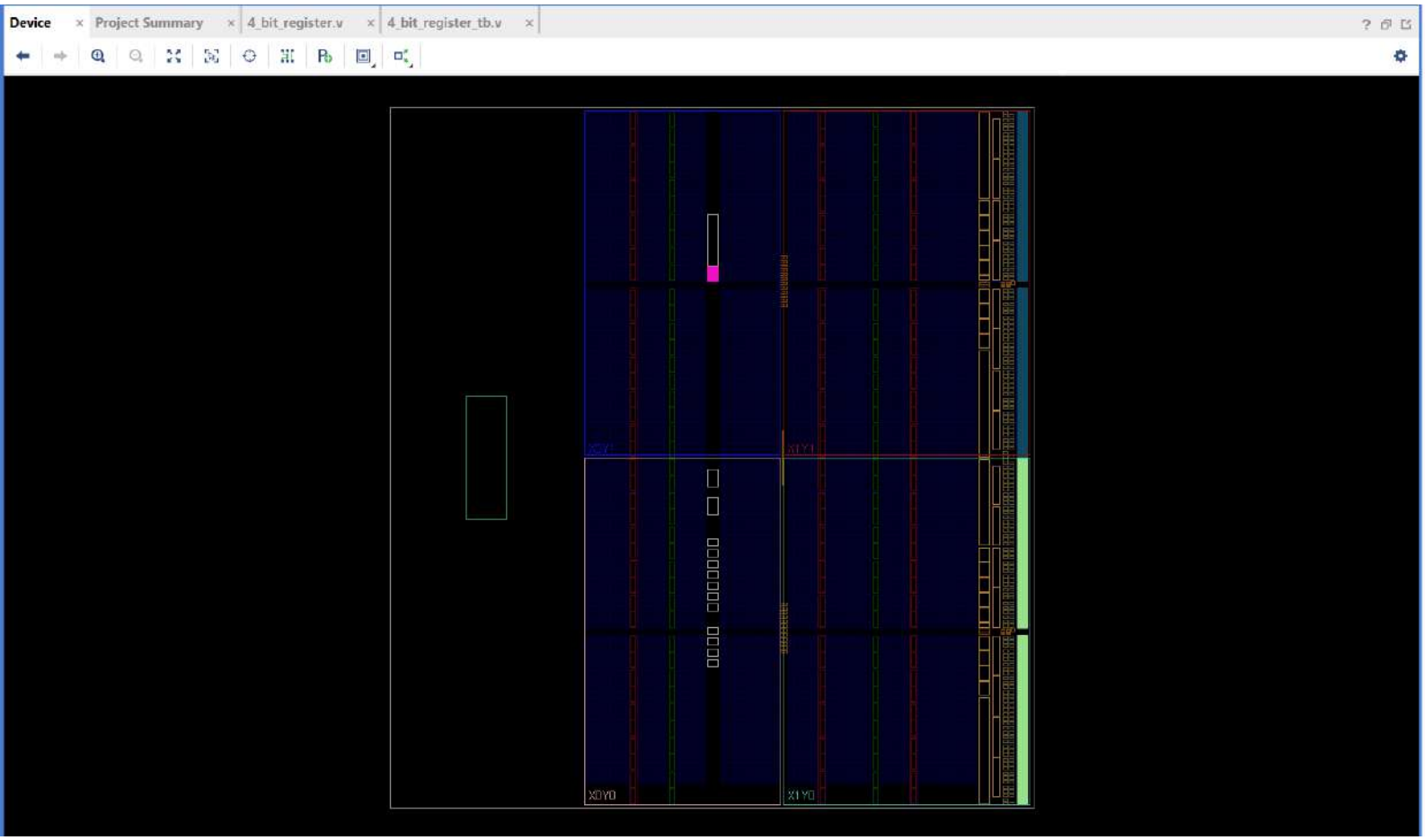
Device
Project Summary
4_bit_register.v
4_bit_register_tb.v
X0Y1
X1Y1
X0Y0
X1Y0

ELABORATED DESIGN - xc7z010iclg225-1L

Tcl Console | Messages | Log | Reports | Design Runs

```
close_design
synth_design -rtl -rtl_skip_mlo -name rtl_1
Command: synth_design -rtl -rtl_skip_mlo -name rtl_1
Starting synth_design
Using part: xc7z010iclg225-1L
Top: register4
---------------------------------------------------------------------------------
Starting RTL Elaboration : Time (s): cpu = 00:00:09 ; elapsed = 00:00:09 . Memory (MB): peak = 2015.617 ; gain = 89.461
---------------------------------------------------------------------------------
INFO: [Synth 8-6157] synthesizing module 'register4' [C:/Users/Asus/4-bit register/4-bit register.srcs/sources_1/new/4_bit_register.v:23]
INFO: [Synth 8-6155] done synthesizing module 'register4' (1#1) [C:/Users/Asus/4-bit register/4-bit register.srcs/sources_1/new/4_bit_register.v:23]
---------------------------------------------------------------------------------
Finished RTL Elaboration : Time (s): cpu = 00:00:11 ; elapsed = 00:00:10 . Memory (MB): peak = 2062.961 ; gain = 136.805
---------------------------------------------------------------------------------
---------------------------------------------------------------------------------
Start Handling Custom Attributes
---------------------------------------------------------------------------------
---------------------------------------------------------------------------------
Finished Handling Custom Attributes : Time (s): cpu = 00:00:12 ; elapsed = 00:00:11 . Memory (MB): peak = 2080.797 ; gain = 154.641
---------------------------------------------------------------------------------
---------------------------------------------------------------------------------
Finished RTL Optimization Phase 1 : Time (s): cpu = 00:00:12 ; elapsed = 00:00:11 . Memory (MB): peak = 2080.797 ; gain = 154.641
---------------------------------------------------------------------------------
Netlist sorting complete. Time (s): cpu = 00:00:00 ; elapsed = 00:00:00 . Memory (MB): peak = 2080.797 ; gain = 0.000
INFO: [Project 1-570] Preparing netlist for logic optimization

Processing XDC Constraints
Initializing timing engine
Completed Processing XDC Constraints

Netlist sorting complete. Time (s): cpu = 00:00:00 ; elapsed = 00:00:00 . Memory (MB): peak = 2126.789 ; gain = 0.000
INFO: [Project 1-111] Unisim Transformation Summary:
No Unisim elements were transformed.

RTL Elaboration Complete:  : Time (s): cpu = 00:00:24 ; elapsed = 00:00:18 . Memory (MB): peak = 2154.457 ; gain = 228.301
4 Infos, 0 Warnings, 0 Critical Warnings and 0 Errors encountered.
synth_design completed successfully
synth_design: Time (s): cpu = 00:00:24 ; elapsed = 00:00:18 . Memory (MB): peak = 2154.457 ; gain = 228.301
```

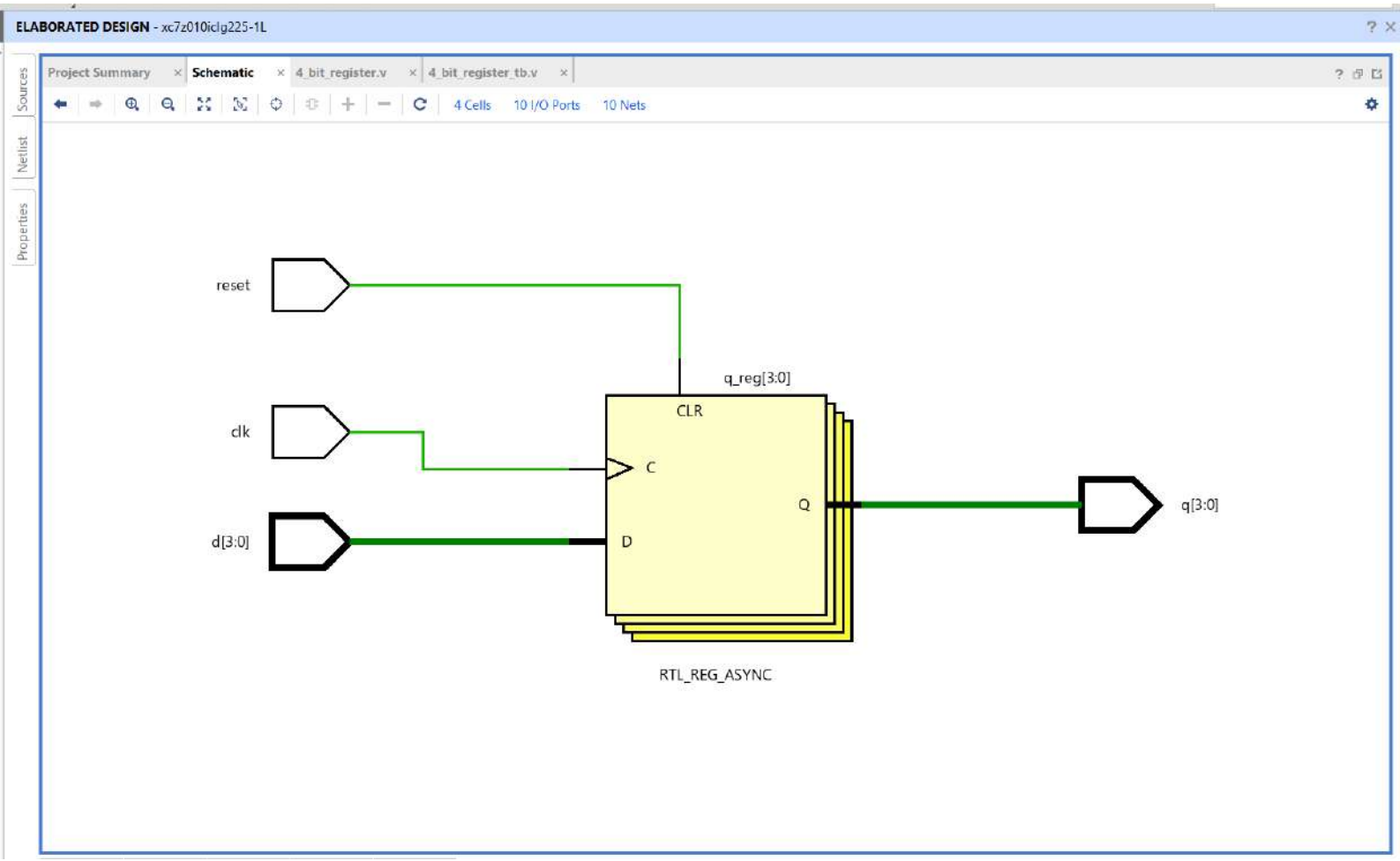
ELABORATED DESIGN - xc7z010iclg225-1L
Project Summary
Schematic
4_bit_register.v
4_bit_register_tb.v
4 Cells
10 I/O Ports
10 Nets
Sources
Netlist
Properties
reset
clk
d[3:0]
q_reg[3:0]
CLR
C
D
Q
q[3:0]
RTL_REG_ASYNC