3rd-credit project report
NPRE 498
Nuclear Separation & Fuel Reprocessing
Removal of Rare earths from FLiBe in a single-fluid Molten Salt Reactor

Andrei Rykhlevskii

December 12, 2018

1 Introduction

First-of-kind civil Molten Salt Reactor was developed, built and operated in Oak Ridge National Laboratory in 1960s. It was called Molten Salt Reactor Experiment and at the moment is the only one operated MSR worldwide. Based on experience from this experiment first commercial Molten Salt Breeder Reactor (MSBR) was designed in early 1970s. The reactor requires continuous chemical reprocessing of the fuel salt, ^{6}LiF-BeF$_2$-ThF$_4$ (72-16-12 mole%) containing approximately 0.3 mole% ^{233}UF$_4$. The reactor power plant and the processing plant are designed as an integral system.

To achieve an acceptable breeding ratio in single-fluid reactor, ^{233}Pa ($\tau_{1/2}$= 27.4d) must be separated from the fuel salt and held outside the core until it decays to ^{233}U. Laboratory experiments demonstrated a liquid-liquid extraction process for removing protactinium and uranium from molten fluoride salts. The method is to exchange thorium and lithium dissolved in molten bismuth for the components to be removed from the salt. Additional data have confirmed that the uranium can be selectively separated from the salt, the protactinium can be trapped in the salt in a decay tank, and the uranium can be returned back to the fuel salt by electrolysis for subsequent transfer to the core. Analysis indicated that the extraction and electrolysis could be carried out rapidly and continuously.

Rare earths are also very strong neutron poisons and would be separated from thorium by a similar reductive extraction method. Unfortunately, this process not as simple as the protactinium isolation because the rare-earth-thorium separation factors are only in range

1.3-3.5 [1]. Successful operation of this reactor design requires the removal of rare earths on a "cycle time"[1] of approximately 50 days [2].

Rare earths separation from FLiBe using Reductive extraction will be discussed in current report.

2 Chemistry of the reductive extraction process

Bismuth is a noble metal which does not chemically react with the components of the fuel salt but dissolve metallic lithium, uranium, thorium, and the rare earths. In contrast, beryllium is almost insoluble in bismuth. It is also completely immiscible with molten-fluoride salts which made it the first choice for the metal phase in the reductive extraction process.

Extraction ability of important actinides and lanthanides has been determined by measuring equilibrium distribution coefficients (K_D) in the two-phase system. Metal fluoride can be extracted from the fuel salt into a liquid bismuth solution. This process might be expressed as equilibrium reaction:

$$MF_{n(salt)} + nLi_{(Bi)} \rightleftarrows M_{(Bi)} + nLiF_{(salt)} \tag{1}$$

in which n is the valence of the metal in the salt phase. An equilibrium constant for reaction (1) can be expressed as:

$$K = \frac{a_M a_{LiF}^n}{a_M F_n a_{Li}^n} = \frac{X_M \gamma_M a_{LiF}^n}{X_{MF_n} \gamma_{MF_n} X_{Li}^n \gamma_{Li}^n} \tag{2}$$

where a is activity, X is mole fraction, and γ is an activity coefficient. Under certain constant experimental conditions, a_{LiF} and activity coefficients were constant, hence:

$$\hat{K} = \frac{X_M}{X_{MF_n} X_{Li}^n} \tag{3}$$

The D-value (distribution coefficient) for M defines as:

$$D = \frac{\text{mole fraction of } M \text{ in bismuth phase}}{\text{mole fraction of } MF_n \text{ in salt phase}} = \frac{X_M}{X_{MF_n}} \tag{4}$$

Combining equations (3) and (4):

$$D = X_{Li}^n \hat{K} \tag{5}$$

or, in logarithmic form:

$$log(D) = nlog(X_{Li}) + log(\hat{K}) \tag{6}$$

Finally, plot $log(D)$ vs $log[Li_{(Bi)}]$ is linear with a slope equal to n (Figure 1). How easy one component can be separated from another is determined by the ratio of respective D-values. This

[1] The MSBR program defined a "cycle time" as the amount of time required to remove 100% of a target nuclide from a fuel salt.

ratio α is called separation factor. If the separation factor for two species A and B ($\alpha = D_A/D_B$) is equal 1 then no separation possible. We want to have α as far from 1 as possible which provides us with better separation efficiency.

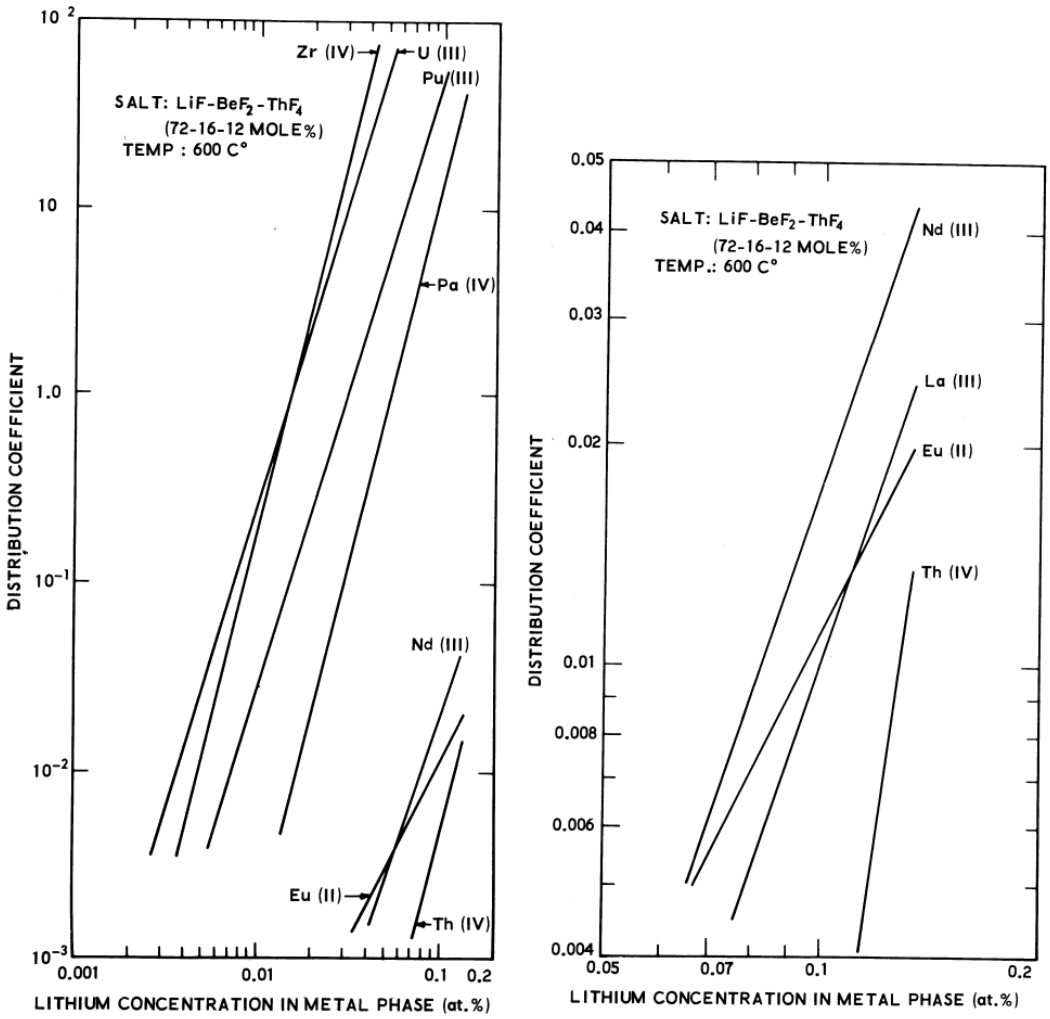

Figure 1: Distribution coefficients of major elements (left) and distribution of thorium and selected rare earths (right) between bismuth phase and fuel salt at 600°C [1].

The slopes of the lines on Figure 1 show that:

- Zr, Th, and Pa exist as tetravalent species in the fuel salt;
- Uranium, Plutonium, and rare earths other than Eu are trivalent;
- Europium is reduced to 2^+ state.

Except difference in valence, uranium and zirconium behavior is almost the same. Hence,

zirconium[2] will co-extract with uranium in the reductive extraction process. From the plot is seen that U and Pa can be easily separated (separation factor ≈100), Pa-Th separation factor is about 3000.

Right part of Figure 1 shows the rare-earth-thorium separation factors are only in the range from 1.3 to 3.5 under desired operating conditions ($[Li] > 0.1$at.%). Consequently, removal of the rare earths by the reductive extraction method will be much more difficult than the Pa isolation.

3 Process flow sheet

Figure 2 shows simplified principal flow sheet for fuel salt reprocessing in MSR. The fuel salt is first temporarily stored for cooling and decay of the shortest lived fission products, then directed to the primary fluorinator, where most of the uranium is removed by fluorination to UF_6 . After that, the salt is routed to an extraction column where mixture containing metallic bismuth, lithium and thorium as reductants are contacted with the salt. The remaining uranium and protactinium are reductively extracted to the bismuth, leaving a salt that only contains fission products dissolved in carrier salt (base composition of LiF-BeF_2 -ThF_4). The salt then goes through a reduction column where UF_6 is reduced to UF_4 in the salt, refueling it and preparing it for return to the reactor. Refill BeF_2 and ThF_4 are also added and all residual bismuth is removed from the salt. After a final cleanup step and valence adjustment, the purified salt returns to the reactor [3, 4].

The bismuth accommodating some uranium and protactinium is routed to a hydrofluorination column where the metallic solutes in the bismuth are oxidized into their fluoride forms in the presence of a decay salt. The decay salt, containing UF_4 , PaF_4 , and ThF_4 passes into a decay tank where ^{233}Pa is decays to ^{233}U. The uranium generated by protactinium decay is removed through fluorination to UF_6 and directed to the reduction column to refuel the purified fuel salt. A hydrofluorinator and a fluorinator can remove approximately 95% of the uranium from the stream.

3.1 Rare-earth removal system

The fuel salt stream from the protactinium isolation system contains only traces of protactinium and uranium (because it were separated in the system) but contains practically all of the rare earths. A share of this salt stream is bypassed to a reductive extraction process [5] for removing rare earths. This method for rare-earth removal is based on differences in the extent to which the rare earths and thorium distribute between molten salt and liquid bismuth containing a reductant. Principal scheme of Rare Earths removal system is shown in Figure 3. A molten salt flow which contains rare-earth fluorides is fed to the center of an extraction column. The

[2] Zr is a fission product of high yield.

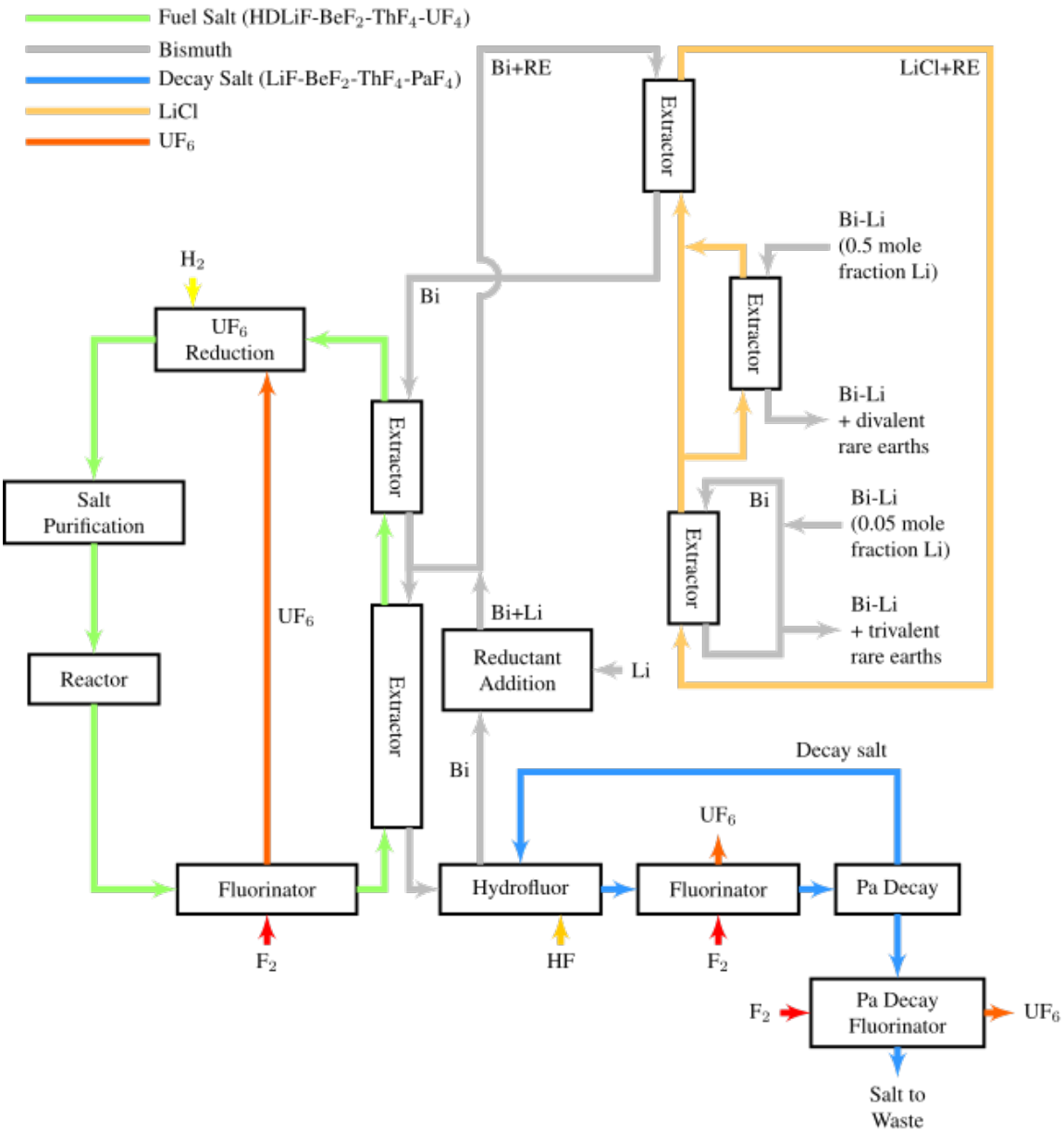

Figure 2: Conceptual reductive extraction flow sheet for fuel salt processing [4].

salt flows **countercurrent** to a liquid bismuth stream which contains thorium and lithium. In the upper part of the column, a large fraction of the rare earths is reduced and transfers to the downflowing liquid metal stream. Below the feed point rare earths concentration is increased in the salt and metal streams in order to produce a concentration hight enough for disposal.

Molten salt leaving the top of the column contains low concentration of rare earths. Fraction of this flow is returned back to the reactor while the rest is sent to an electrolytic cell complex. The net effect of the complex is to push thorium and lithium into bismuth for use as extractant and to return extracted rare earths, entering the complex with bismuth from the bottom of the cascade, to the cascade as reflux, oxidizing them out of the metal and transferring them to the returning salt stream.

Electrolytic oxidizer-reducer is required for reducing lithium and thorium fluorides into a bismuth cathode to prepare the metal streams fed to the extraction columns and for oxidizing extracted components from the metal streams leaving the columns [2]. The electrolytic-cell complex consists of an electrolytic cell with contactors above and below it. Both the anode and the cathode of the cell are pools of flowing bismuth, and the electrolyte is salt that does not contain large amounts of rare earths or thorium. The cathode feeds lithium to the bismuth stream that flows into the lower contactor and extracts essentially all ($\approx 99\%$) of the thorium out of the feed stream. The anode puts BiF_3 into the salt that flows into the upper contactor and oxidizes all of the rare earths out of the entering bismuth.

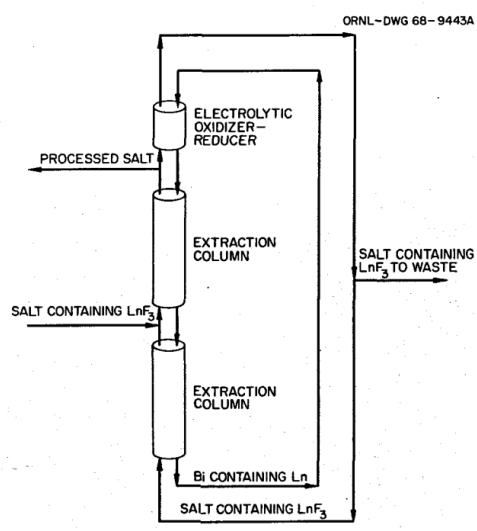

Figure 3: Rare-Earth removal from a fuel salt by Reductuve Extraction [5].

4 Separation Efficiency

Rare earth removal efficiencies were calculated during Molten Salt Reactor Experiment for a range of operating conditions to establish the importance of number of stages, separation factor, metal-to-salt flow ratio, rare earth concentration in the discard stream, location of the feed point, and the fraction of ThF_4 which is reduced in the electrolytic oxidizer-reducer. The thorium and lithium concentrations in the bismuth stream fed to the extraction column were both 0.0016 mole fraction.

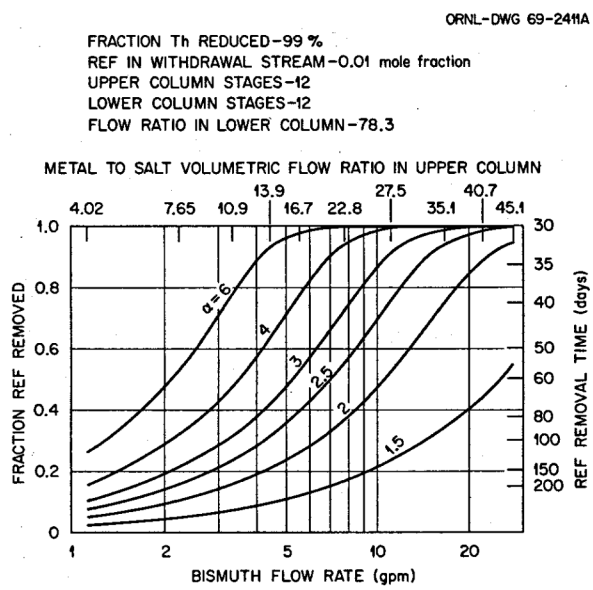

Figure 4: Metal-to-Salt Volumetric Flow Ration in Opper Column (24-stage column) [5].

The optimum feed location was at the center of the column and all results to is for this feed location. System performance is shown in Figure 4 for a range of Metal-to-Salt flow ratios and for rare-earth-thorium separation factors from 1.2 to 6. The fraction of the ThF_4 which is reduced in the electrolytic cell was 99%. Operation with a bismuth flow rate of 15 gpm will result in a **rare earth removal efficiency of 69%** (44-day removal time) for a separation factor of 2 and a removal efficiency of **31%** (95-day removal time) for a separation factor of 1.5.

The effect of fraction of ThF_4 reduced in the electrolytic cell is shown in Figure 5. A significant decrease in removal efficiency results from the fraction of ThF_4 reduced being decreased from 99 to 90%, and the system becomes ineffective if less than 50% of the ThF_4 is reduced. The separation factors are 1.3 for Eu, 1.7 for Pm, 1.8 for La, 2.0 for Sm, 3.0 for Nd, and 3.5 for Ce. The removal times range from about 225 days for Eu to 30 days for Nd and Ce (Table 6).

The rare earth, which determine the operating conditions for the removal system is promethium (which has a separation factor of 1.7), since it is the strongest neutron absorber. Lanthanum is less important, and the resulting removal time (≈100 days) is satisfactory. The removal

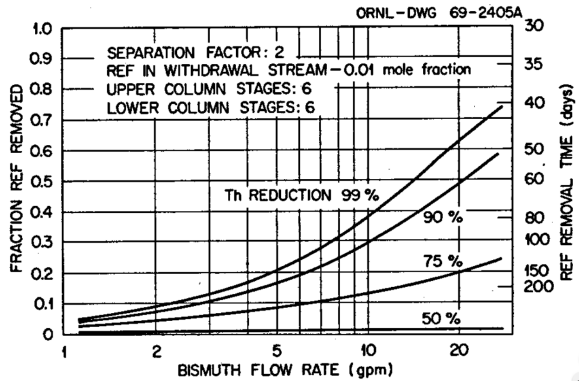

Figure 5: Rare-Earth Removal System Performance as function of Bismuth Phase Flow Rate and the Thorium Removal in the Electrolytic Cell Complex [5].

Rare Earth	Separation Factor	Removal Time (days)
Pm	1.7	63.8
Nd	3.0	30.6
Sm	2.0	43.5
La	1.8	47.7
Eu	1.3	222.0
Ce	3.5	30.3

Figure 6: Removal Times for various rare earths [5].

times for rare earths having separation factors greater than 2, such as neodymium and cerium, will be shorter than required.

5 Conclusions

Processes for the protactinium isolation from the fuel salt and for the removal of the rare earths fission product poisons from MSR's using reductive extraction have been studied. The protactinium isolation system is simpler and more tractable that the rare-earth removal system due to the higher distribution coefficients and separation factors available. Although high efficiency of rare earths separation can be achieved by increasing liquid bismuth flow rate or by increasing number of stages (more that 24 considered in this work).

References

[1] M. E. Whatley, L. E. McNeese, W. L. Carter, L. M. Ferris, E. L. Nicholson, Engineering Development of the MSBR Fuel Recycle, Nuclear Applications and Technology 8 (2) (1970) 170–178. doi:10.13182/NT70-A28623.
URL https://doi.org/10.13182/NT70-A28623

[2] L. E. McNEESE, Engineering Development Studies for Molten-Salt Breeder Reactor Processing No. 2, Tech. Rep. ORNL-TM-3137, Oak Ridge National Lab., Oak Ridge, TN, United States (1971).

[3] W. L. Carter, E. L. Nicholson, DESIGN AND COST STUDY OF A FLUORINATION–REDUCTIVE EXTRACTION–METAL TRANSFER PROCESSING PLANT FOR THE MSBR., Tech. Rep. ORNL-TM-3579, Oak Ridge National Lab. (ORNL), Oak Ridge, TN (United States) (Jan. 1972). doi:10.2172/4667633.
URL https://www.osti.gov/biblio/4667633

[4] K. Sorensen, One-Fluid MSBR Chemical Processing - (2006).
URL http://energyfromthorium.com/history/msbr-design-one-fluid-chem/

[5] R. B. Briggs, Molten-salt reactor program. Semiannual progress report, Tech. Rep. ORNL-4396, Oak Ridge National Lab., Tenn. (Feb. 1969).