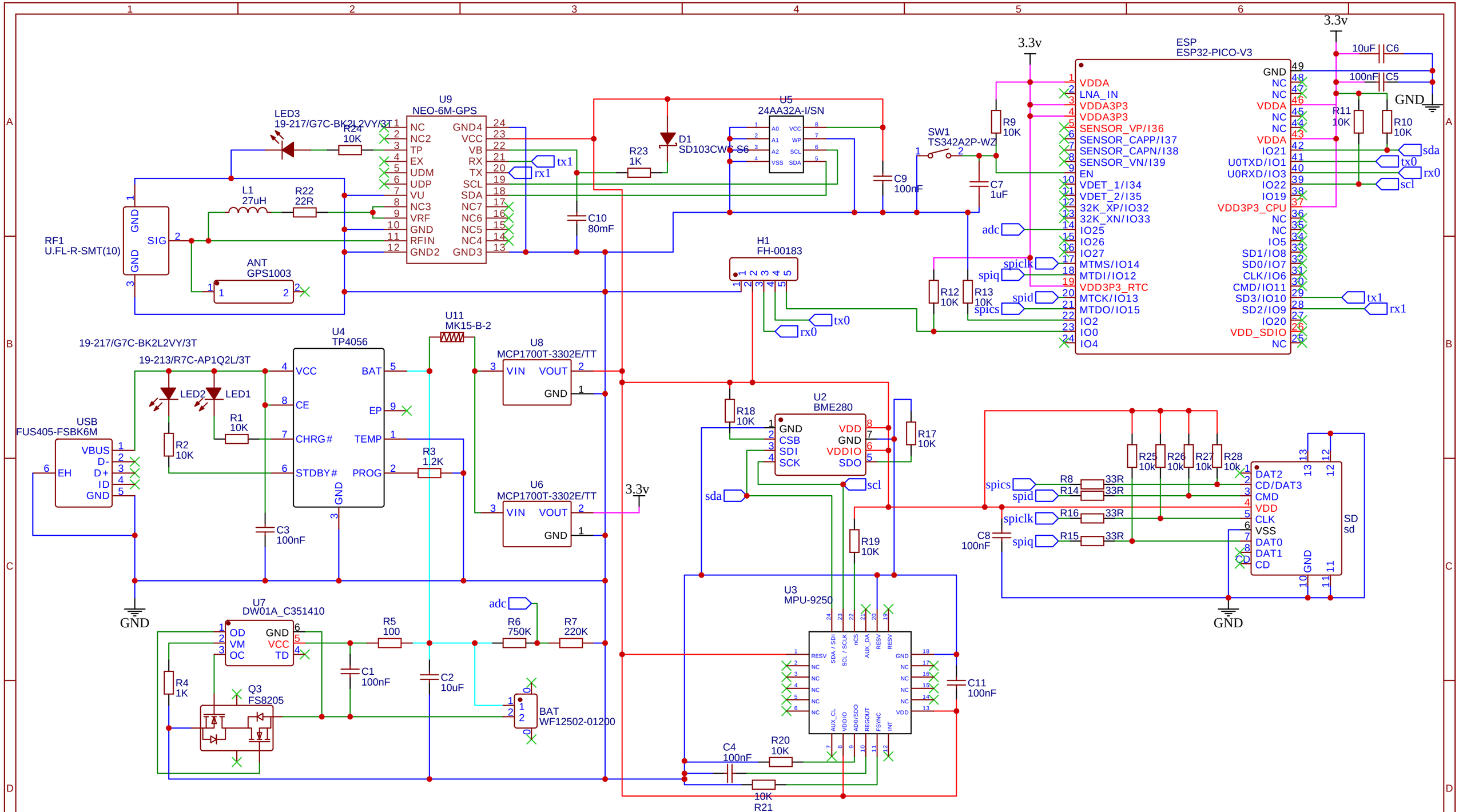

TITLE: Wearable DataLogger

REV: 1.2

Company: SBoard

Sheet: 1/1

Date: 2020-15-11

Drawn By: ArgusR