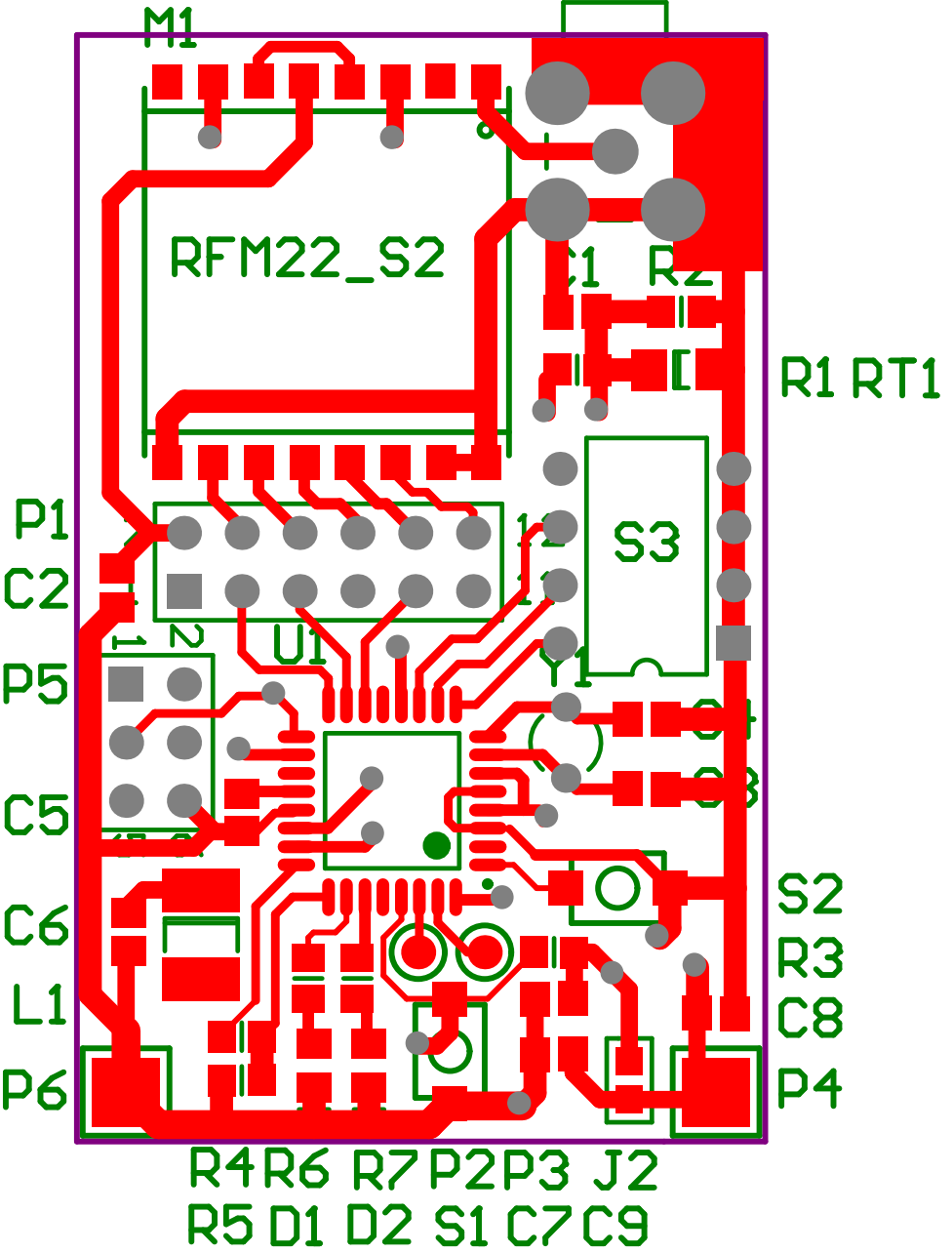
M1
RFM22_S2
C1
R2
R1
RT1
P1
C2
S3
U1
P5
Y1
C4
C3
C5
S2
C6
R3
L1
C8
P6
P4
R4
R6
R7
P2
P3
J2
R5
D1
D2
S1
C7
C9

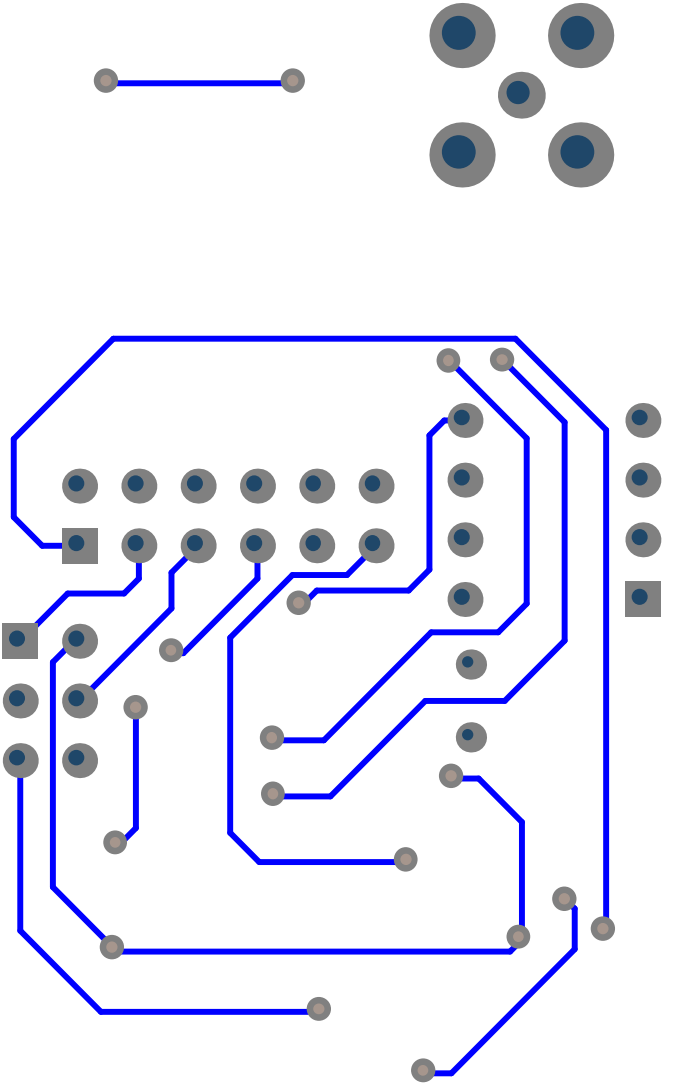

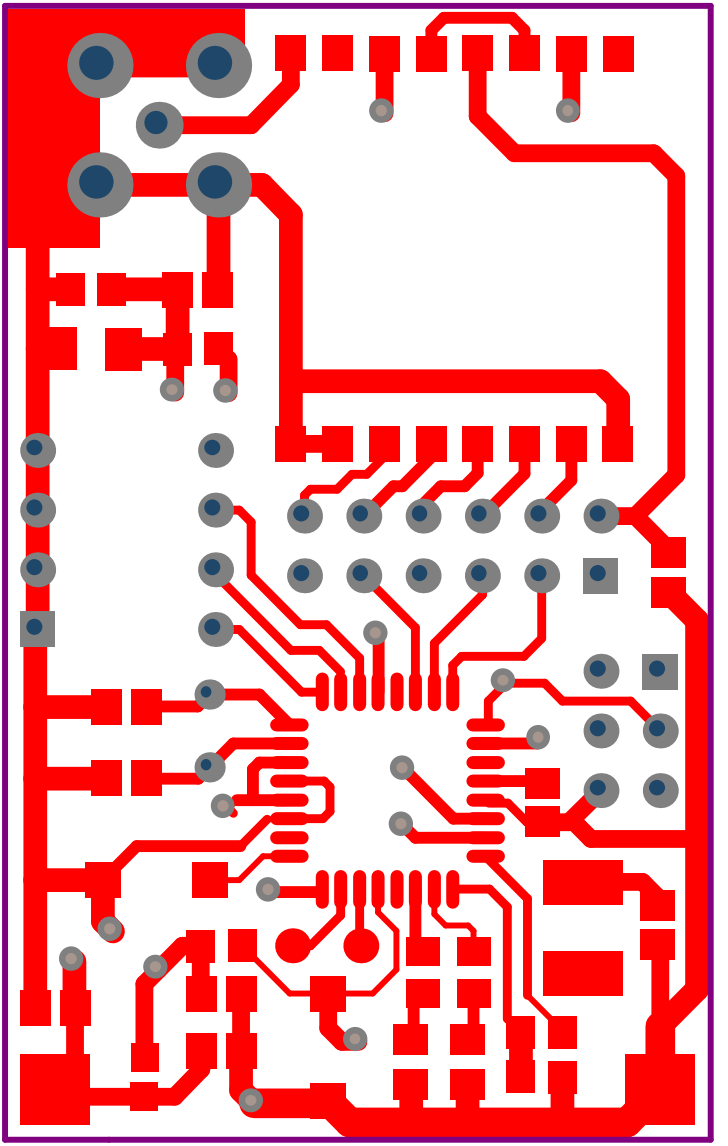

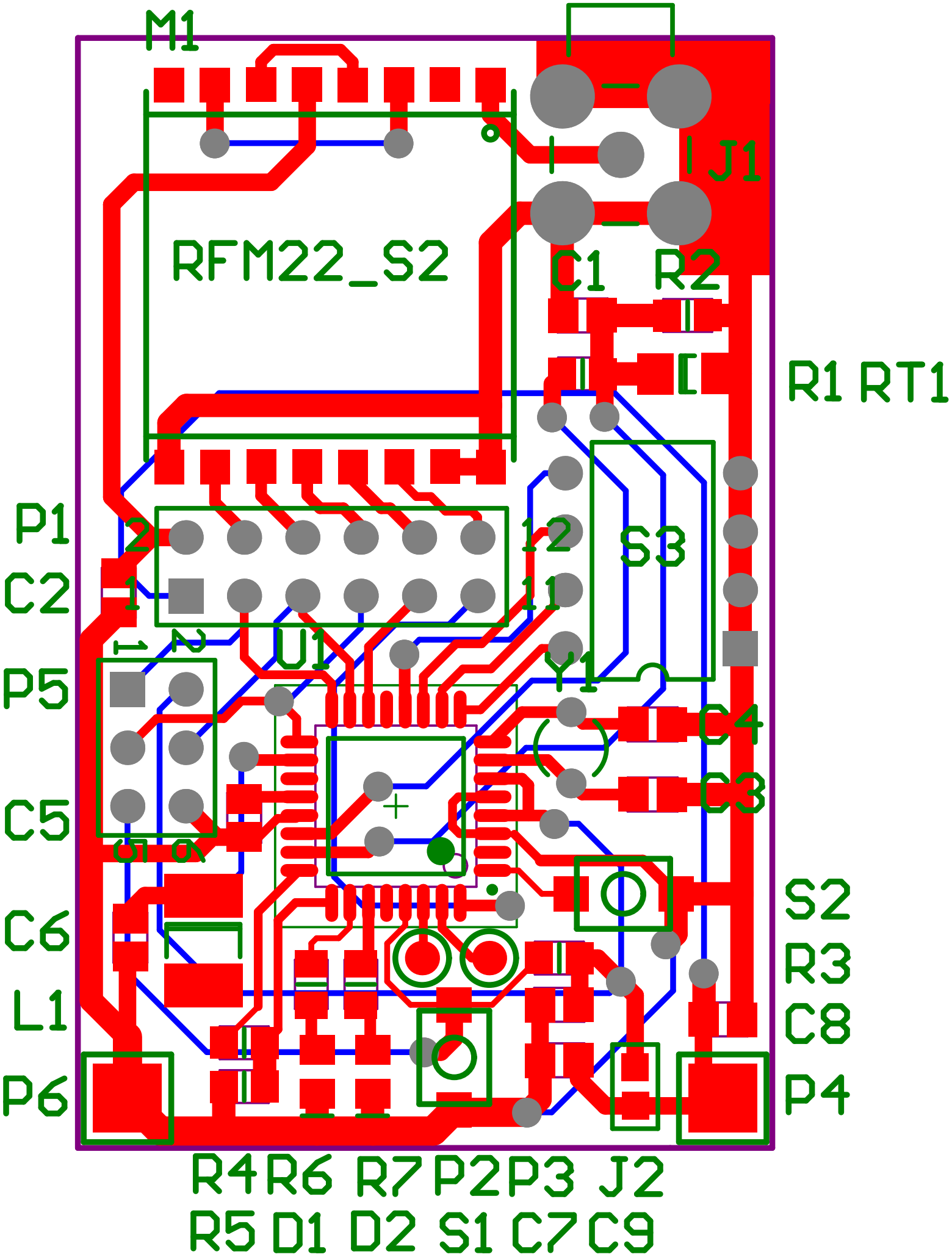
M1
RFM22_S2
J1
C1
R2
R1 RT1
P1
C2
S3
U1
Y1
P5
C4
C3
C5
S2
C6
R3
L1
C8
P6
P4
R4 R6 R7 P2 P3 J2
R5 D1 D2 S1 C7 C9

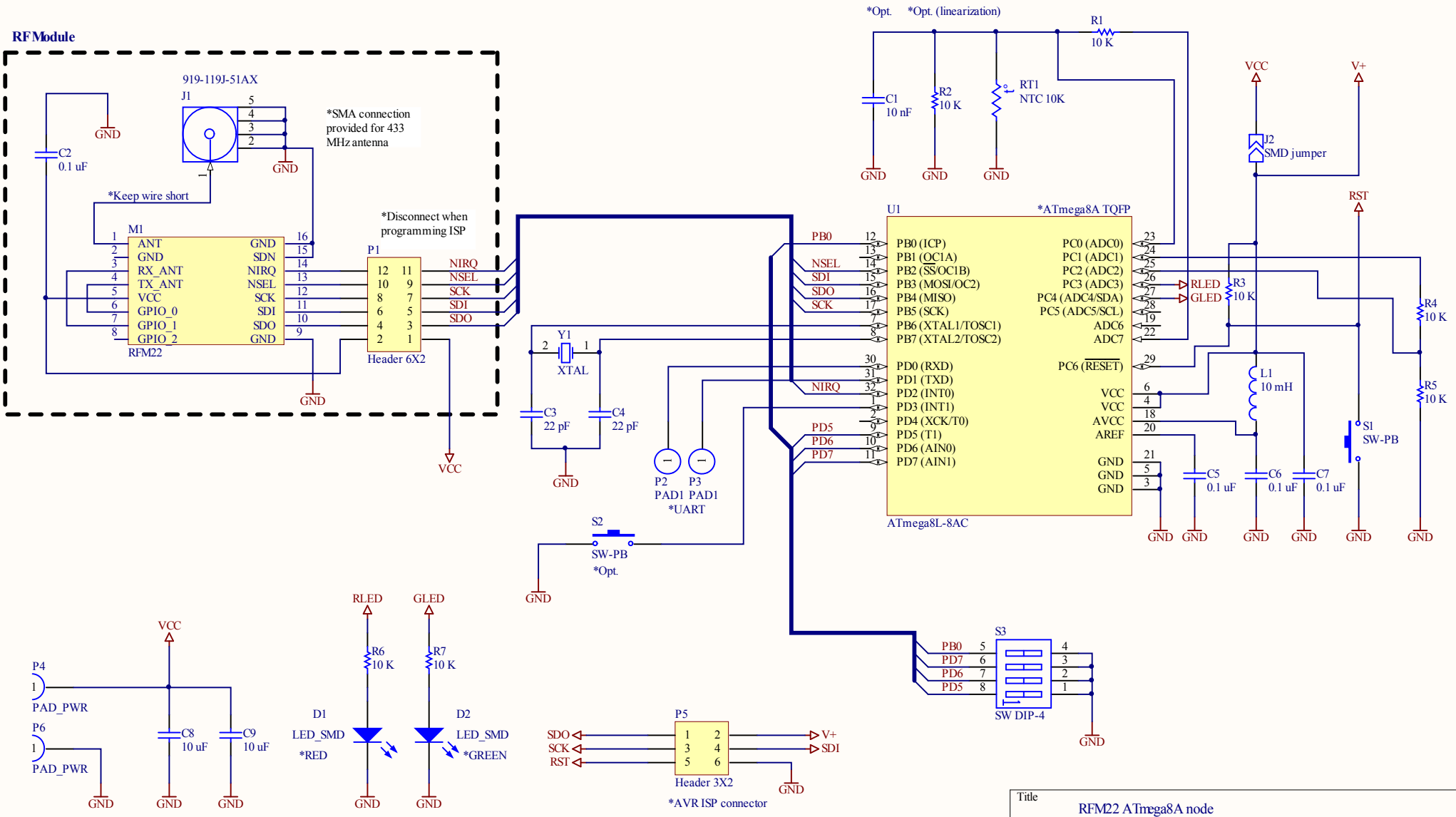

Title	RFM22 ATmega8A node	
Size A4	Number	Revision V1
Date: 10.11.2011		Sheet of
File: C:\rfm22 footprint\RFM22.SchDoc		Drawn By: Arian