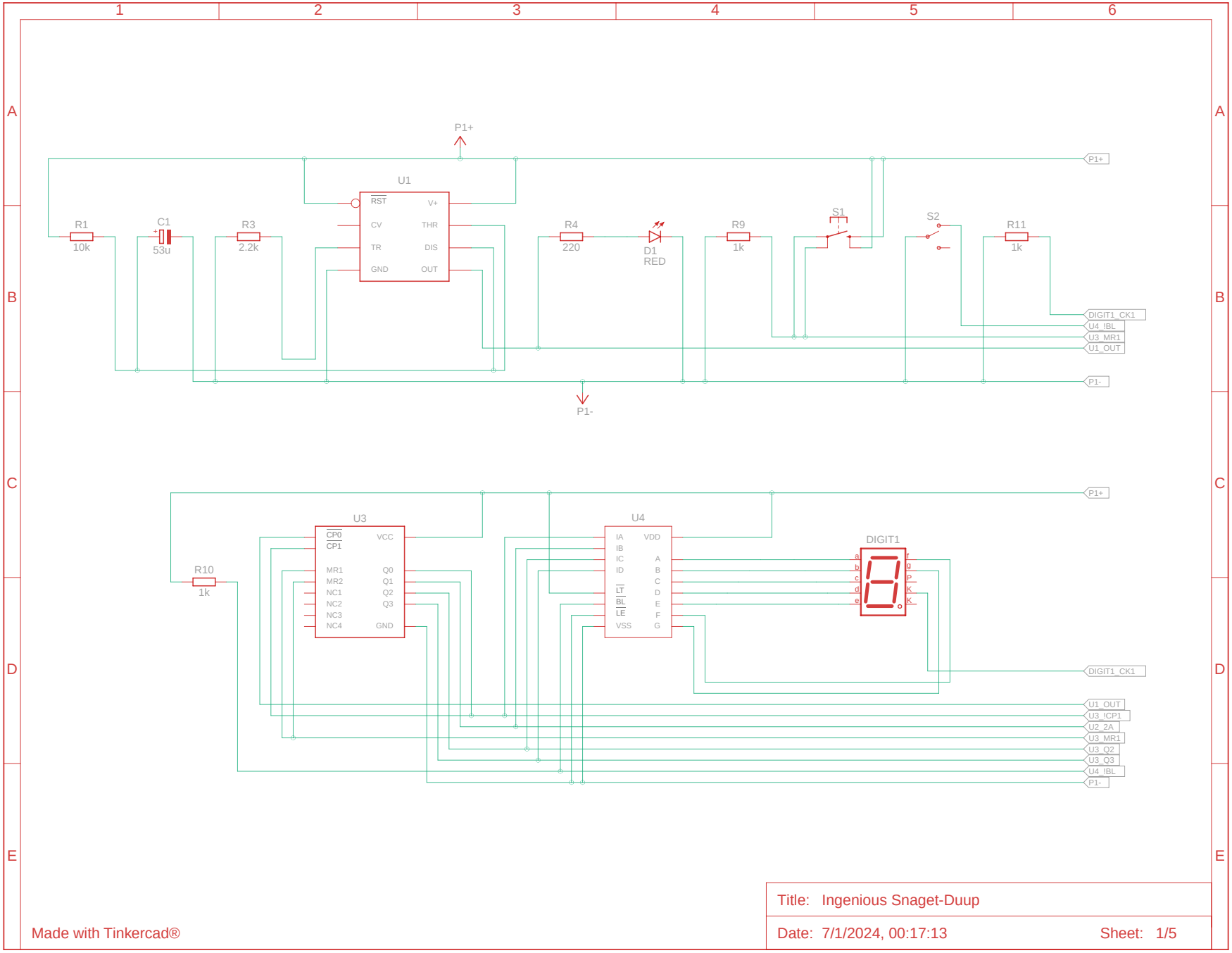

Made with Tinkercad®

Title: Ingenious Snaget-Duup

Date: 7/1/2024, 00:17:13

Sheet: 1/5

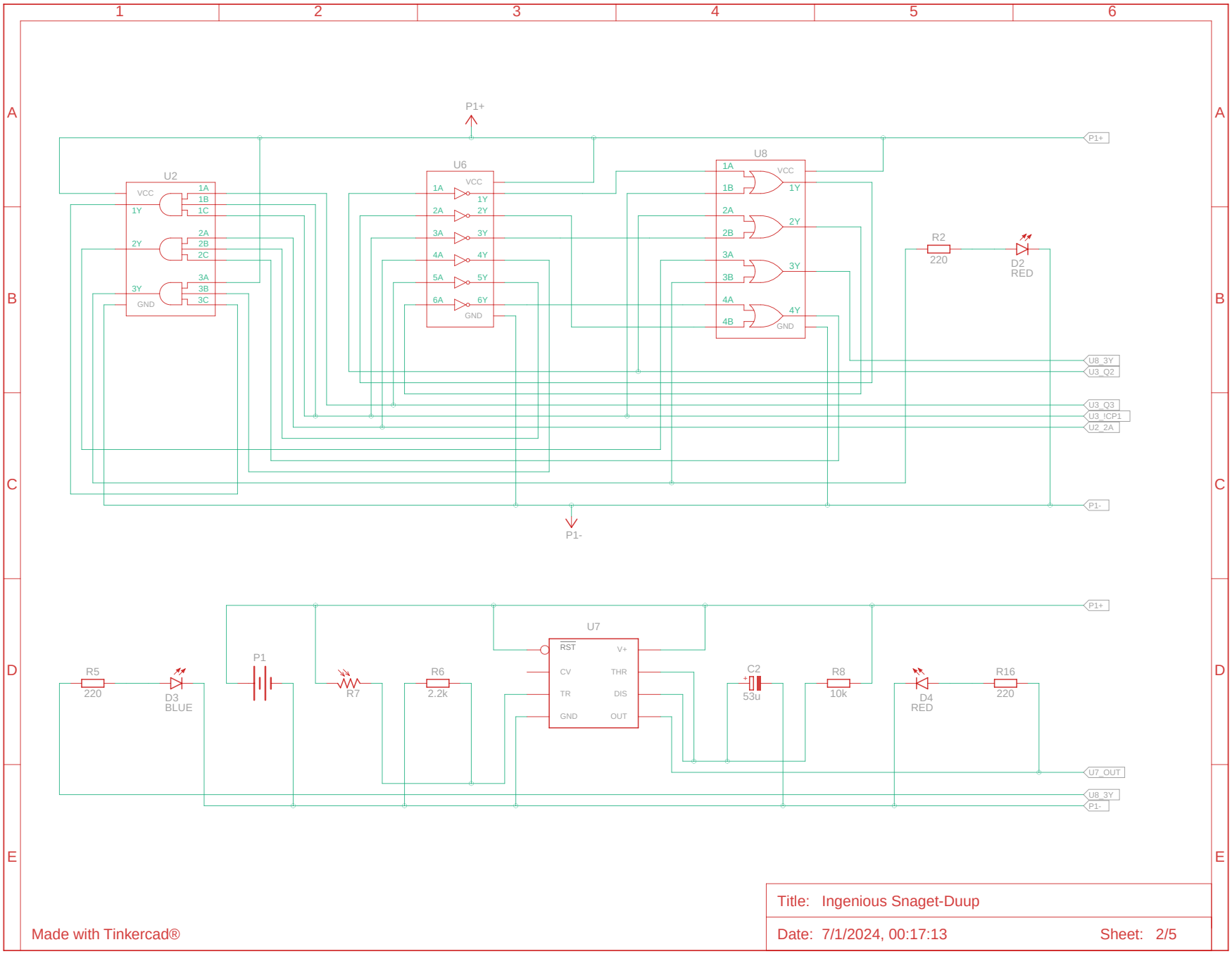

Made with Tinkercad®

Title: Ingenious Snaget-Duup

Date: 7/1/2024, 00:17:13

Sheet: 2/5

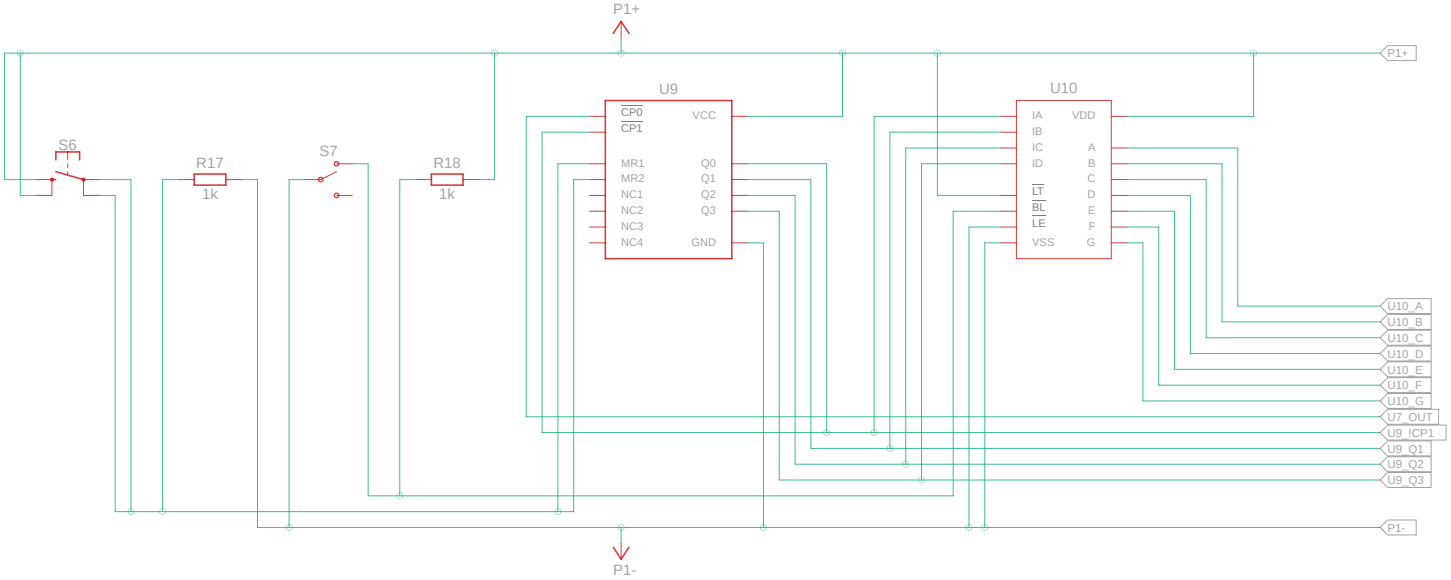

Made with Tinkercad®

Title: Ingenious Snaget-Duup

Date: 7/1/2024, 00:17:13

Sheet: 3/5

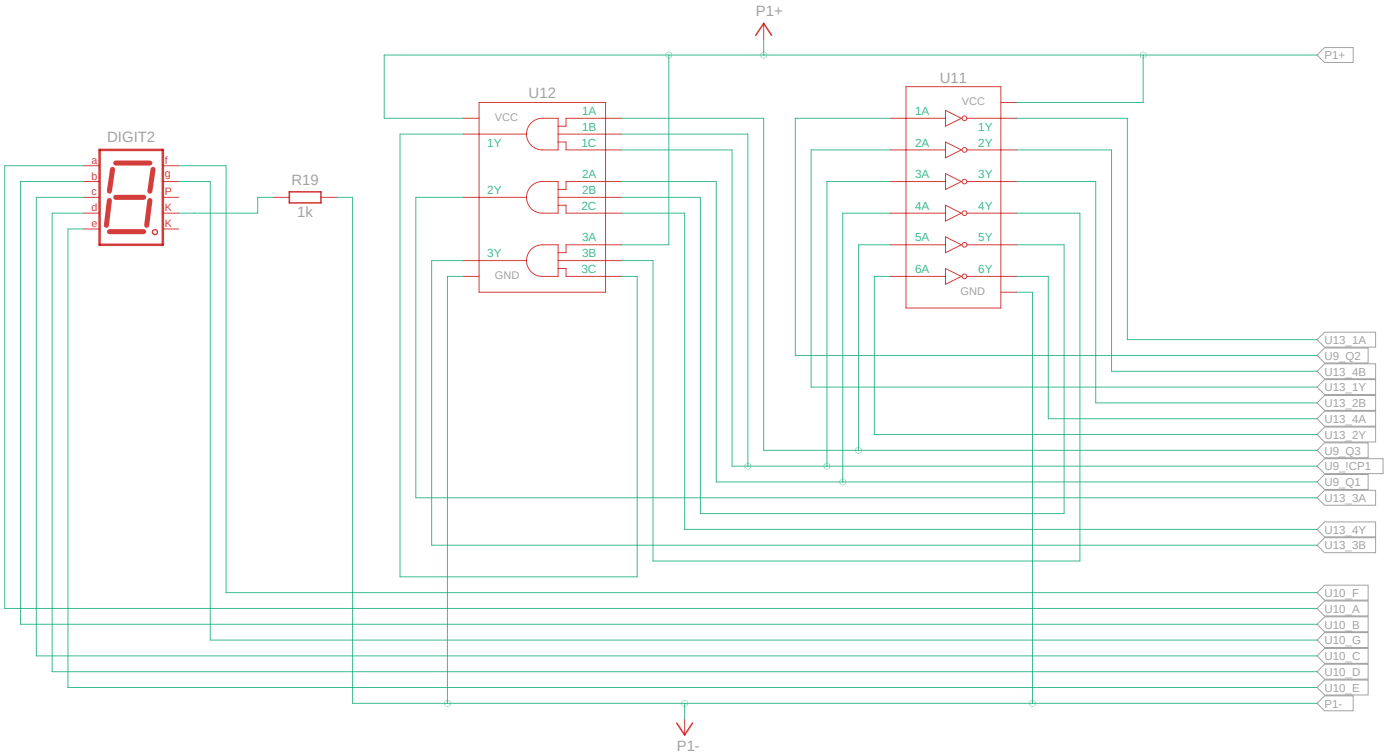

Made with Tinkercad®

Title: Ingenious Snaget-Duup

Date: 7/1/2024, 00:17:13

Sheet: 4/5

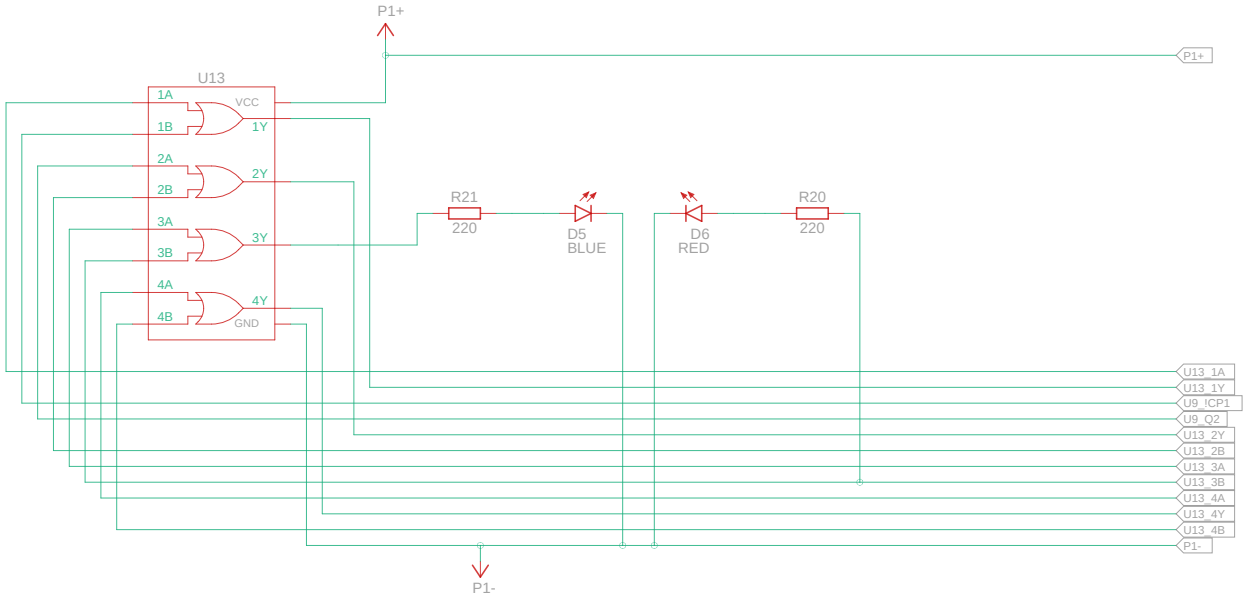

Made with Tinkercad®

Title: Ingenious Snaget-Duup

Date: 7/1/2024, 00:17:13

Sheet: 5/5