PABNA UNIVERSITY OF SCIENCE AND TECHNOLOGY

Department of
Information & Communication Engineering
Faculty of Engineering and Technology

PRACTICAL LAB REPORT

Course Tittle : Analog Electronics Sessional

Course Code : ICE-1202

Submitted To-

Mst. Sonia Khatun
Roll No: 160638
Session :2015-2016
1st Year 2nd Semester
Dept. of ICE
Pabna University of Science and Technology.

Submitted By-

Iffat Ara
Assistant Professor
Dept. of Information and Communication Engineering
Pabna University of Science and Technology.

SUBMITTED DATE : 12/02/2017

Scanned with CamScanner

INDEX

Exp. No	Experiment Name
01.	To verify tha inverting and non-inverting terminals of operational amplifier.
02.	Verify tha following characteristics of an operational amplifier (i) CMRR (ii) Slew rate
03.	To design and construct an integrator and differentiator using IC-741 OP-AMP
04.	To Construct and study the characteristics of active low pass filter
05.	To Construct and study the characteristics of active high pass filter

PABNA SCIENCE AND TECHNOLOGY UNIVERSITY

Scanned with CamScanner

Pabna University of Science & Technology

DEPARTMENT OF INFORMATION AND COMMUNICATION ENGINEERING (ICE)

Faculty of Engineering & Technology

PRACTICAL LAB REPORT

Course Title: Analog Electronics Sessional

Course Code: ICE-1202

Experiment No: 01

Name of the Experiment: To study the operational amplifier as

(a) Inverting amplifier

(b) Non-Inverting amplifier

Submitted by:	Submitted to:
Mst. Sonia Khatun Roll: 160638 Session: 2015-16 1st Year 2nd Semester Dept. of ICE; PUST	**Iffat Ara** Assistant Professor, Department of Information and Communication Engineering (ICE), Pabna University of Science and Technology, Pabna.

Date of Issue:

Date of Submission :

Scanned with CamScanner

Name of the Experiment :-

To study the operational amplifier as

a. Inverting amplifier

b. Non-inverting amplifier

Objective :-

(i) To measured the input and output voltage.

(ii) To view the inverse wave signal for the inverting amplifier and same signal for the non-inverting amplifier.

Theory :-

(a) Inverting amplifier :-

Circuit diagram of basic inverting OP-AMP is shown fig.a and it's equivalent circuit is shown fig-b. In this model of operation, the positive input terminal of the amplifier is grounded and the input signal is applied to the negative input terminal through impedence R_1. The feedback applied through the impedence R_2. from ~~we can neglect~~ the output to input terminal is negative feedback impedence R_2 and input ~~Ressis~~ resistance R_1 determine the inverting operation of the amplifier as we shall infer from forth coming eqn(2)

Scanned with CamScanner

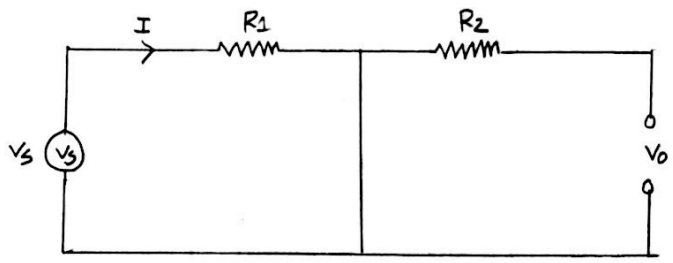

Fig: equivalent circuit for inverting OP-AMP

As OP-AMP is considered as ideal, it will have infinite voltage gain.

But

$$|A| = \frac{V_o}{V_i}$$

Therefore, with finite value of V_o, the output voltage gain A can be infinite only if input voltage V_i is zero. The negative feedback from output to input through R_2 senes to keep voltage. V_i at zero. Thus terminal 1 will be at the potential of terminal 2. As terminal 2 is grounded, terminal 1 is thus virtually grounded and no current ($i=0$) flow through terminal 1 to 2 terminal. current I flowing through R_1 will also flow through R_2. Thus

Current through R_1 is $I = \frac{V_s - V_i}{R_1}$

current through R_2 is $I = \frac{V_i - V_o}{R_2}$

So,

$$\frac{V_s - V_i}{R_1} = \frac{V_i - V_o}{R_2}$$

$$\Rightarrow \frac{V_o}{R_2} = \frac{V_i}{R_2} + \frac{V_i}{R_1} - \frac{V_s}{R_1}$$

$$\Rightarrow \frac{V_o}{R_2} = V_i\left(\frac{1}{R_1} + \frac{1}{R_2}\right) - \frac{V_s}{R_1}$$

Scanned with CamScanner

But since $A = \frac{V_o}{V_i}$. So, put $V_i = \frac{V_o}{A}$;

$$\frac{V_o}{R_2} = -\frac{V_o}{A}\left(\frac{1}{R_1} + \frac{1}{R_2}\right) - \frac{V_s}{R_1} \quad \text{——— (i)}$$

$$\Rightarrow \frac{V_o}{V_s} = -\frac{R_2}{R_1}\left\{\frac{1}{1 + \frac{1}{A}\left(1 + \frac{R_2}{R_1}\right)}\right\} \quad \text{——— (ii)}$$

Where,

$$\frac{V_o}{V_s} = A_f$$

A_f is called closed loop gain with feedback.

We can neglect the second term of eqn (2) so,

$$A_f = -\frac{R_2}{R_1} \quad \text{——— (iii)}$$

(b) <u>Non-inverting amplifier :-</u>

We need an amplifier whose output is equal to and it phase with the input and in addition source and the load are in effect insolate ($Z_i = \alpha$ and $Z_o = 0$). This is the case in non-inverting OP-AMP. As input impedence $R_i = \alpha$ no current flow into either input terminal of the OP-AMP, so, $i_1 = 0$ and $i_2 = 0$. In the circuit, the input signal V_s is applied directly to the non-inverting terminal 2. So, no ~~pose~~ phase inversion results at the output. With $Z_i = \alpha$, $A = -\alpha$ and $V_o = A(V_1' - V_s)$, we conclude that for finite V_o.

$$V_1 - V_s = 0$$

$$\Rightarrow V_s = V_1$$

$$\Rightarrow V_1 = V_s$$

Scanned with CamScanner

In non-inverting OP-AMP has no virtual ground at either one of its input terminals. As the current into the input terminal $I_1 = 0$. we conclude that current I through R_1 will also flow through R_2. We have,

$$V_1 = R_1 \left(\frac{V_o}{R_1 + R_2}\right)$$

$$\Rightarrow V_s = R_1 \left(\frac{V_o}{R_1 + R_2}\right)$$

$$\Rightarrow \frac{V_o}{V_s} = 1 + \frac{R_2}{R_1}$$

$$\Rightarrow A_f = 1 + \frac{R_2}{R_1}$$

Where A_f the voltage gain with feedback.

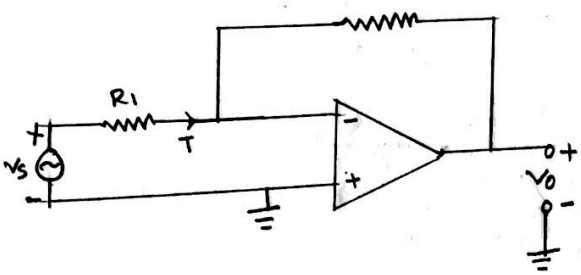

Fig a : Inverting OP-AMP

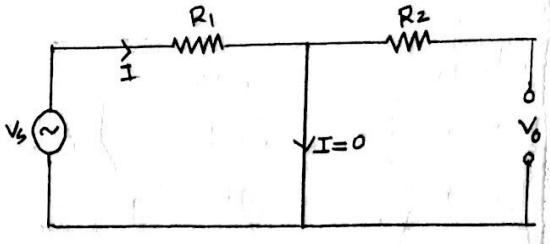

Fig b : Equaivalent circuit for inverting OP-AMP

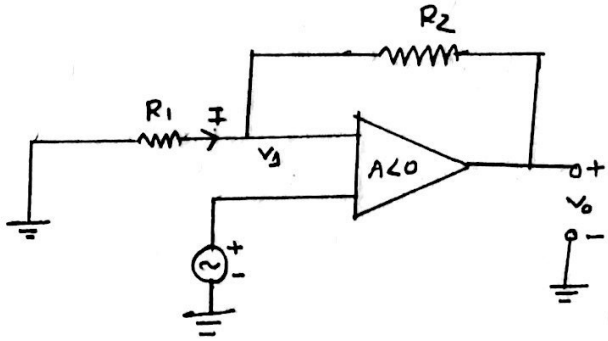

Fig : No-inverting OP-AMP

Scanned with CamScanner

Experimental Data :-

Table 1 :-

Experimental data for inverting amplifier.

No of observation	Input Resistance R_1 (KΩ)	Feedback resistance R_f (KΩ)	Input voltage V_i (volt)	output voltage V_o (volt)	measured voltage gain $A_v = \frac{V_o}{V_i}$	calculated voltage gain $A_v = -\frac{R_f}{R_1}$
1	1	10	2	20	-10	-10
2	1	10	5	50.09	-10.09	-10
3	1	4.7	3	14.2	-4.7	-4.7

Table 2 :-

Experimental data for non-inverting amplifier.

No of observation	Input resistance R_1 (KΩ)	feedback resistance R_f (KΩ)	Input voltage V_i (volt)	output voltage V_o (volt)	measured voltage gain $A_v = \frac{V_o}{V_i}$	calculated voltage gain $A_v = 1 + \frac{R_f}{R_1}$
1	1	10	1.18	12.6	10.86	11
2	1	10	5	52.3	10.96	11
3	1	4.7	3	17.1	5.7	5.7

Scanned with CamScanner

Experimental Data :

Table 1 :

Experimental data for inverting amplifier.

No of observation	Input Resistance R_1 (KΩ)	Feedback resistance R_f (KΩ)	Input voltage V_i (volt)	output voltage V_o (volt)	measured voltage gain $A_v = \frac{V_o}{V_i}$	calculated voltage gain $A_v = -\frac{R_f}{R_1}$
1	1	10	2	20	-10	-10
2	1	10	5	50.09	-10.09	-10
3	1	4.7	3	14.2	-4.7	-4.7

Table 2 :

Experimental data for non-inverting amplifier.

No of observation	Input resistance R_1 (KΩ)	feedback Resistance R_f (KΩ)	Input voltage V_i (volt)	output voltage V_o (volt)	measured voltage gain $A_v = \frac{V_o}{V_i}$	calculated voltage gain $A_v = 1 + \frac{R_f}{R_i}$
1	1	10	1.18	12.6	10.86	11
2	1	10	5	52.3	10.96	11
3	1	4.7	3	17.1	5.7	5.7

Scanned with CamScanner

Result :-

We measured input resistance, feedback resistance, input and output voltage flowing the circuit. Here, input resistance is 1KΩ and output resistance is 10KΩ. Then, we measured input voltages are 2V, 5V, 3V. Then, we measured output voltages are 20, 50.2V, 14.2V respectively. We calculated the voltage gain and it same as measured voltage gain. In inverting op-AMP, we saw the output wave shape in inverse from the input wave shape by the oscilloscope. We get the same wave shape for the non-inverting op-AMP. So, we get accurate result from the circuit.

Discussion :-

From the table, we saw the output voltage is double to input voltage. So, we get the accurate voltage gain for inverting and non-inverting op-AMP. We use different type resistor for get different gain. So we get the accurate result.

Scanned with CamScanner

Precaution :-

(i) Set up all the elements very carefully.

(ii) Set up oscilloscope connection very carefully.

(iii) measured input and output voltage carefully.

Scanned with CamScanner

na University of Science & Technology

PARTMENT OF INFORMATION AND COMMUNICATION ENGINEERING (ICE)

Faculty of Engineering & Technology

PRACTICAL LAB REPORT

Course Title: Analog Electronics Sessional

Course Code: ICE-1202

Experiment No: 01

Name of the Experiment: To study the following characteristics of an operational amplifier.

(a) Common Mode Rejection Ratio (CMRR)

(b) Slew Rate.

Submitted by:	Submitted to:
Mst. Sonia Khatun Roll: 160638 Session: 2015-16 1st Year 2nd Semester Dept. of ICE, PUST	**Iffat Ara** Assistant Professor, Department of Information and Communication Engineering (ICE), Pabna University of Science and Technology, Pabna.

Date of Issue: 08·11·16 Date of Submission : 18·12·16

Scanned with CamScanner

Name of the Experiment :-

To study the following characteristics of an operational amplifier

(a) Common Mode Rejection Ratio (CMRR)

(b) Slew rate.

Objectives :-

(i) To observe the CMRR of OP-AMP.

(ii) To observe the slew rate of OP-AMP.

Theory :-

① Common Mode Rejection Ratio :-

To express how successful a differential amplifier is providing gain for the differential input and rejecting the common mode signal, a factor called common mode rejection ratio is defined as follows :

$$CMRR = \frac{A_d}{A_c}$$

$$= \frac{\text{Differential gain}}{\text{Common mode gain}}$$

Let ~~us~~ us show a linear active device with two inputs V_1 and V_2 and one output V_o, each measured with respect to ground. In ideal differential amplifier,

$$V_o = A_d (V_1 - V_2) = V_d A_d$$

Scanned with CamScanner

where A_d is the differential gain of the amplifier.

Fig: 1

Ideally a signal common to both inputs produces zero ~~at~~ outputs but in practical differential amplifier, output depends not only on difference signal. V_d but also on the avarge signal where,

$$V_c = \frac{V_1 + V_2}{2}$$

and, $V_d = V_1 - V_2$

$$\left.\begin{aligned} \text{giving, } V_1 &= V_c + \tfrac{1}{2}V_d \\ \text{and } V_2 &= V_c - \tfrac{1}{2}V_d \end{aligned}\right\} \text{—— (1)}$$

Suppose A_1 is the voltage gain for input V_1 with V_2 grounded, and A_2 is the voltage gain for input V_2 with V_1 grounded then we can express output as a linear combination of two input voltages, i.e.

$$\begin{aligned} V_o &= A_1V_1 + A_2V_2 \\ &= A_1\left(V_c + \tfrac{1}{2}V_d\right) + A_2\left(V_c - \tfrac{1}{2}V_d\right) \\ &= \tfrac{1}{2}(A_1 - A_2)V_d + (A_1 + A_2)V_c \\ &= A_dV_d + A_cV_c \end{aligned}$$

Scanned with CamScanner

where,

$$A_d = \frac{1}{2}(A_1 - A_2)$$

and $A_c = A_1 + A_2$

In this case, output voltage will provide directly the value of A_c. Thus we can determine both A_d and A_c and find CMRR.

The common mode rejection ratio can be expressed in decibles as

$$CMRR = 20 \log \left(\frac{A_d}{A_c}\right)$$

(ii) Slew rate :-

Slew rate is the maximum voltage change per unit time in a node of a circuit due to limited current source. The SR of a circuit is limited by slowest node i.e. the one with the smallest slew rate. Image a node in a circuit where the load is capacitive dominant i.e. the load is mostly made of capacitance C.

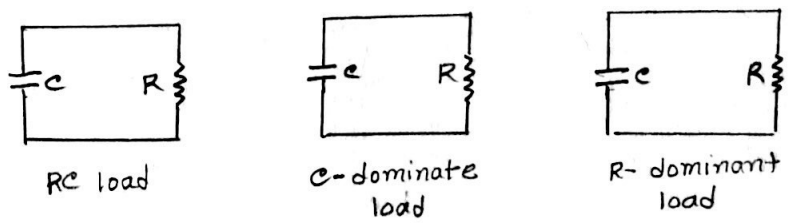

Fig : Slew Rate of OP-AMP

Scanned with CamScanner

Experimental Circuit :-

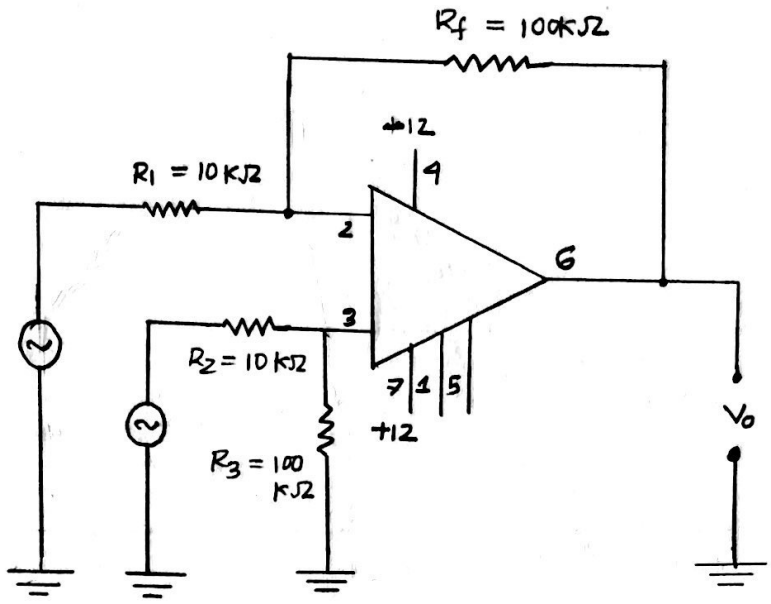

Fig: Experimental circuit for CMRR

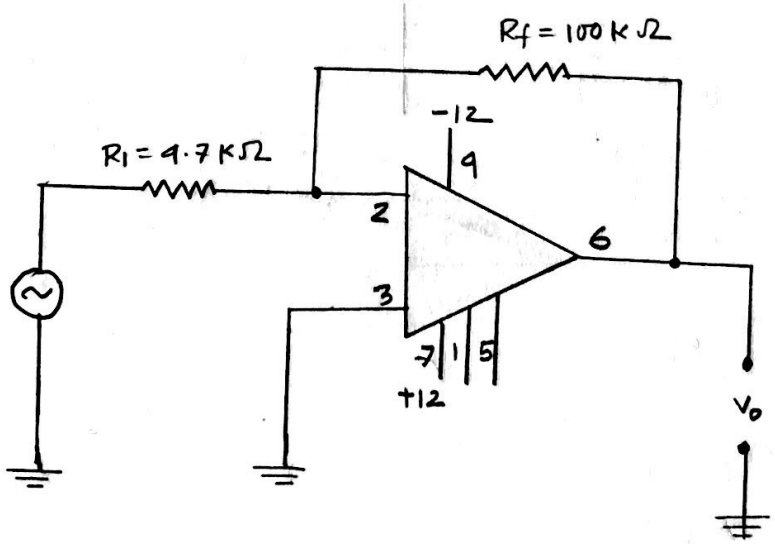

Fig: Experimental circuit for Slew Rate

Scanned with CamScanner

Experimental Data :-

Table 1 :- Experimental Data table for CMMR.

No of obs	Inverting Resistance R_1 (KΩ)	Non Inverting Resistance R_1' (KΩ)	Feedback Resistance R_f (KΩ)	Common input voltage V_i (mA)	Common output voltage V_o (mA)	Common mode gain $A_{cm} = \frac{V_o}{V_i}$	Differential gian $A_d = \frac{R_f}{R_1}$	CMRR $20\log\left(\frac{A_d}{A_c}\right)$ (dB)
1.	1	1	10	2	20	10	10	0.
2.	10	10	100	2	20	10	10	0
3.	10	10	100	1	10.6	10.6	10	-0.495
4.	10	10	100	3	29.6	9.8	10	0.886

Table 2 :- Experimental Data table for slew Rate.

No of obs	Frequency f (KHZ)	Inverting Resistance R_1 (KΩ)	Feedback Resistance R_f (KΩ)	ΔV (Volt)	Δt ~~(volt)~~ (μs)	Slew rate $S.R = \frac{\Delta V}{\Delta t}$ V/μs
1.	2	1	10	20	50	0.9
2.	5	1	10	20	40	0.5
3.	10	1	10	20	40	0.5

Scanned with CamScanner

Description :-

First, we set the IC-741 on the bread board. Then we connect the inverting, non-inverting and feedback resistor with IC-741 on the board. We set up +12V and -12V dc suppy for bising. Then we take Ac signal for supply and measured output. We measured the value from oscilloscope. So, we get accurate result.

For slew rate, we also set the IC-741 and resistor on the bread board. Then we take dc signal for biasing and ac signal for supply. Then we measured input and output voltage by using oscilloscope. and measured slew rate. So, we get accurate result of slew rate.

Result :-

According to the table, we measured input, output voltage and common mode gain for differenent resistor for the CMRR. Then we measure different gain forom resistor. We measure CMRR from following rate. So, get accurate result.

For, slew rate we measured ΔV and Δt for various frequency and resistor. Then we measured slew rate of OP-AMP.

Scanned with CamScanner

Discussion :-

Flowing the wave shape and table, we saw the common mode gain and differential gain and also saw the CMRR and slew rate of an operation amplifier. we measured it for the various resistance and frequency. so, we get accurate value.

Precuation :-

(i) We set all the instruments in the bread board very carefully.

(ii) We measure all the value very carefully.

(iii) We take the value from oscilloscope very carefully.

Scanned with CamScanner

Pabna University of Science & Technology

DEPARTMENT OF INFORMATION AND COMMUNICATION ENGINEERING (ICE)

Faculty of Engineering & Technology

PRACTICAL LAB REPORT

Course Title: Analog Electronics Sessional

Course Code: ICE-1202

Experiment No: 03

Name of the Experiment: To design and construct and a defferentiator using IC-741 OP-AMP.

Submitted by:

Mst. Sonia Khatun
Roll: 160638
Session: 2015-16
1st Year 2nd Semester
Dept. of ICE, PUST

Submitted to:

Iffat Ara
Assistant Professor,
Department of Information and Communication Engineering (ICE),
Pabna University of Science and Technology, Pabna.

Date of Issue: 15.11.16

Date of Submission : 18.12.16

Scanned with CamScanner

Experiment Name :-

To design and construct integrator and a Differentiator using IC-741 OP-AMP.

Objective :-

1. To determined the output wave shape from input wave shape.

2. To determined the input and output frequency from the wave shape.

3. To determined the time period from the wave shape.

Theory :-

Integrator :-

It is an inverting OP-AMP in which feedback resistor R_2 has been replaced by a capacitor C Fig : a is shown as integrator. Feedback through the capacitor forces a virtual ground to exist at the inverting input terminal. It means the voltage across C is simply the output voltage V_o.

We can write,

$$V_o = -\frac{q}{C} + V_o$$

$$= -\frac{1}{C}\int_0^t I\,dt + V_o$$

Scanned with CamScanner

where V_0 is the initial voltage. Since input current to the ideal amplifiers is zero. we put,

$$I = \frac{V}{R}$$

$$\therefore V_0 = -\frac{1}{C}\int_0^t \frac{V_s}{R} + V_0$$

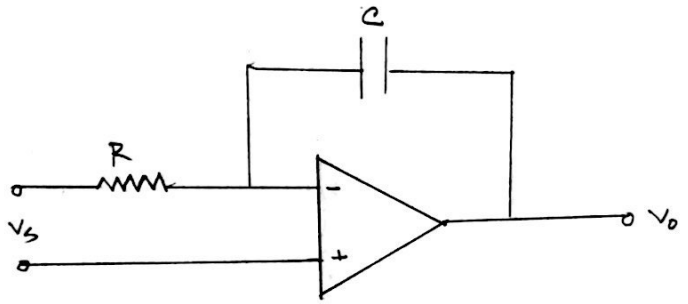

Figure : Integrator

Thus output rises linearly with time - a ramp. this is called Miller sweep. Output voltage is propotional to the integral of the input voltage. Initial voltage V_0 can be set to any desired value by introducting additional circuit. If input voltage is constant then,

$$V_0 = -\frac{V_s t}{CR}.$$

Scanned with CamScanner

Differentiator :-

In inverting OP-AMP, we replace input resistance by a capacitor to design a defferentiator. Because of virtual ground at the inverting terminal. we have

$$I = \frac{dq}{dt}$$

$$= \frac{d}{dt}(CV_s)$$

$$= C\frac{dV_s}{dt}$$

The output voltage is,

$$V_o(t) = -RI_1 = -RC\frac{dV_s(t)}{dt}$$

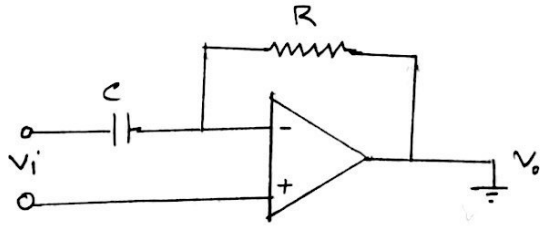

Figure: Differentiator

The output is proportional to the time derivative of the input voltage. If input signal is

$$V_s(t) = |V_s| \sin\omega t$$

the output is $V_o = RC|V_s| \sin\omega t$

$$= -RC|V_s|\omega\cos\omega t$$

Scanned with CamScanner

which increases linearly with frequency and the differentiator circuit has high gain at high frequency. It thus also amplifies high frequency components of amplifier noise. Due to this reason it is rarely used in analonge components.

Apparators :-

I. Resistors
II. Bread board
III. AVO meter
IV. Connecting wire
V. capacitors
VI. Oscilloscope
VII. Calculator
VIII. IC - 741 etc.

Expercimental circuit :-

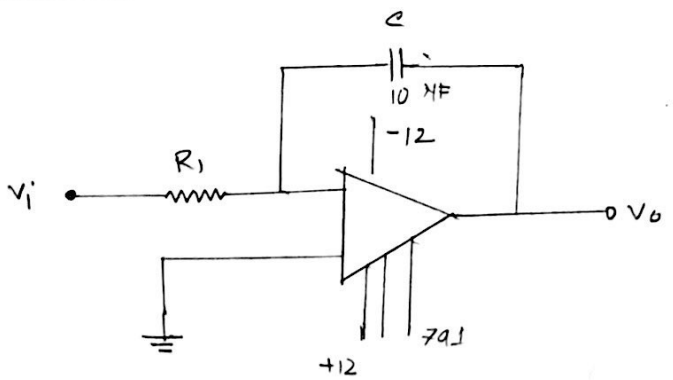

Fig: Experimental circuit for an integrator using IC-741 OP-AMP.

Scanned with CamScanner

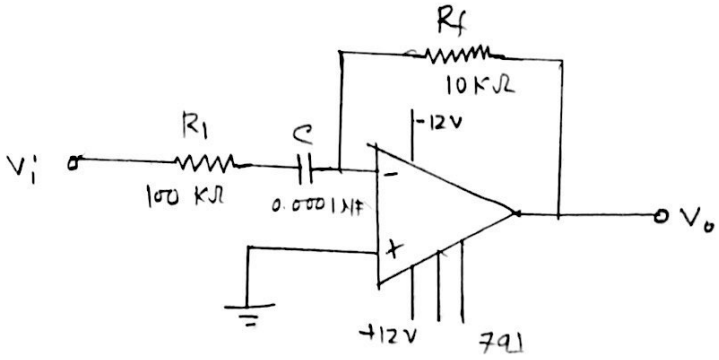

Fig 2 : Experimental circuit for an differential using IC-741 OP-AMP.

Experimental Data :-

Table 1 :- Experimental Data table for integrator.

No of obs	Input wave shape	Resistor R1 (KΩ)	Capacitor C (μF)	Time period		frequency		output wave shape
				Input ms	output ms	Input Hz	output Hz	
1.	⎍	1	10	0.005	0.005	200	200	∧
2.	⎍	1	10	0.0025	0.0025	400	400	∧
3.	⎍	1	10	0.0016	0.0016	600	600	∧

Table 2 :- Experimental data table for Differentiator.

No of obs	Input wave shape	Resistance R1 (KΩ)	Capacitor C (μF)	feedback resistor Rf (KΩ)	Time period		frequency		output wave shape
					Input ms	output ms	input Hz	output Hz	
1.	∧	100	0.01	10	0.01	0.01	100	100	⎍
2.	∧	100	0.01	10	0.09	0.09	25	25	⎍
3.	∧	100	0.01	10	0.02	0.02	50	50	⎍

Scanned with CamScanner

Description :-

At first, we setup IC-741 on the bread board. Then we connect resistor and capacitor with IC-741. we take supply from dc voltage from self biasing. Then we take AC ~~+~~ signal for supply. we also connect oscilloscope and frequency generator with input and output. For the integrator we take supply of square wave shape but for the Differentiator we took tringle wave shap. ~~Differentiator~~ Then we taking value from the circuit.

Result :-

From the table, we saw for the integrator when we take sequence wave shape. Output is traingle wave shape. we also get input and output frequency same.

For the Differentiator, we take traingle wave shape for supply but get square waveshave. Here also get same frequency. So, we get accurate result.

Scanned with CamScanner

Pabna University of Science & Technology

DEPARTMENT OF INFORMATION AND COMMUNICATION ENGINEERING (ICE)

Faculty of Engineering & Technology

PRACTICAL LAB REPORT

Course Title: Analog Electronics Sessional

Course Code: ICE-1202

Experiment No: 05

Name of the Experiment: To construct and study the characteristics of active high pass filter.

Submitted by :

Mst. Sonia Khatun

Roll: 160638

Session: 2015-16

1st Year 2nd Semester

Dept. of ICE, PUST

Submitted to:

Iffat Ara

Assistant Professor,

Department of Information and Communication Engineering (ICE),

Pabna University of Science and Technology, Pabna.

Date of Issue: 15.01.17

Date of Submission : 12-02-17

Scanned with CamScanner

Name of the Experiment :-

To construct and study the characteristics of active high pass filter.

Theory :-

A filter circuit canbe constructed using passive components, like resistors and capacitors. But an active filter in addition to passive filter components makes use of an OP-AMP as an amplifier.

The amplifier in the active filter circuit my provide voltage amplification and signal isolation and bufferings.

High pass filter :-

There is very little difference between high pass and low pass filter. A high pass filter is an electronic filter that passes signals with a frequency higher than the cutoff frequency. The value of cutoff frequinces f_1 and f_2 is obtained by using high pass filter as well as low pass filter.

Scanned with CamScanner

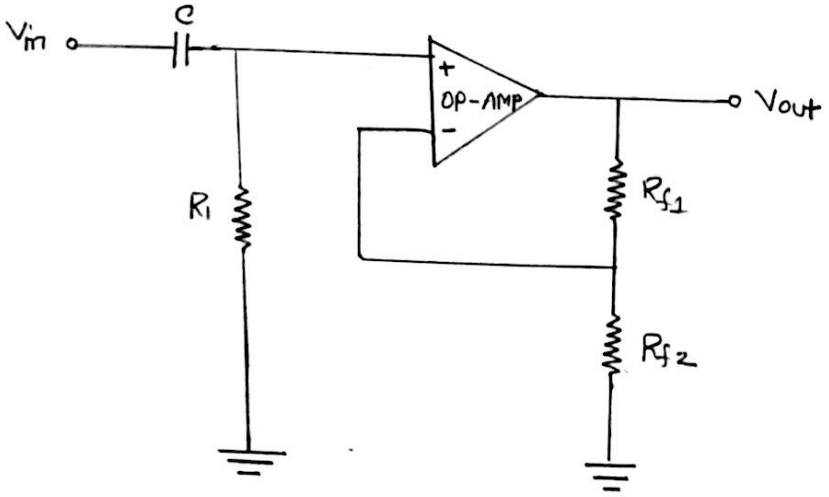

Fig 1: First order high pass filter circuit.

From this circuit we have observed that the frequency,

$$f = \frac{1}{2\pi R_1 C}$$

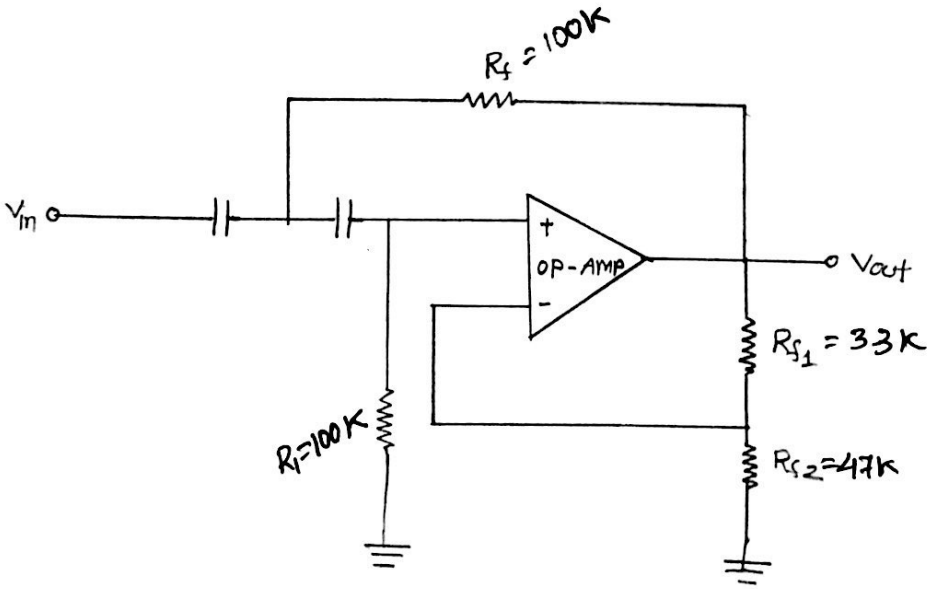

Fig: second order high pass filter.

Scanned with CamScanner

The frequency response of high pass filter :

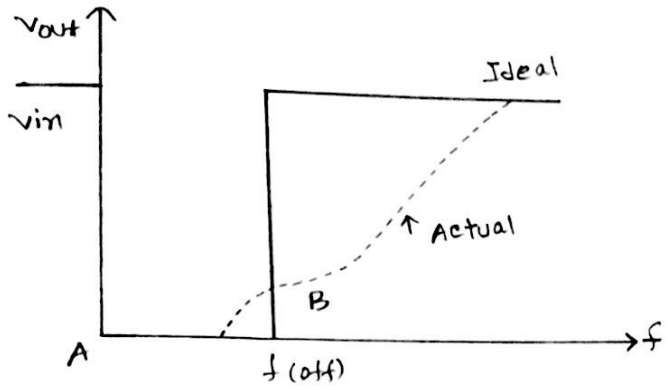

The soild line indecates the ideal response while the dashed line corresponds to the actual response of filter circuits. The ideal curve indicates that the filter has a zero output for the frequences flot and beyond foH it has a constant output.

Experimental requirement :-

(1) Resistors
(2) capacitors
(3) IC - 741
(4) Oscilloscope
(5) Connecting wire etc

Scanned with CamScanner

Experimental set up :-

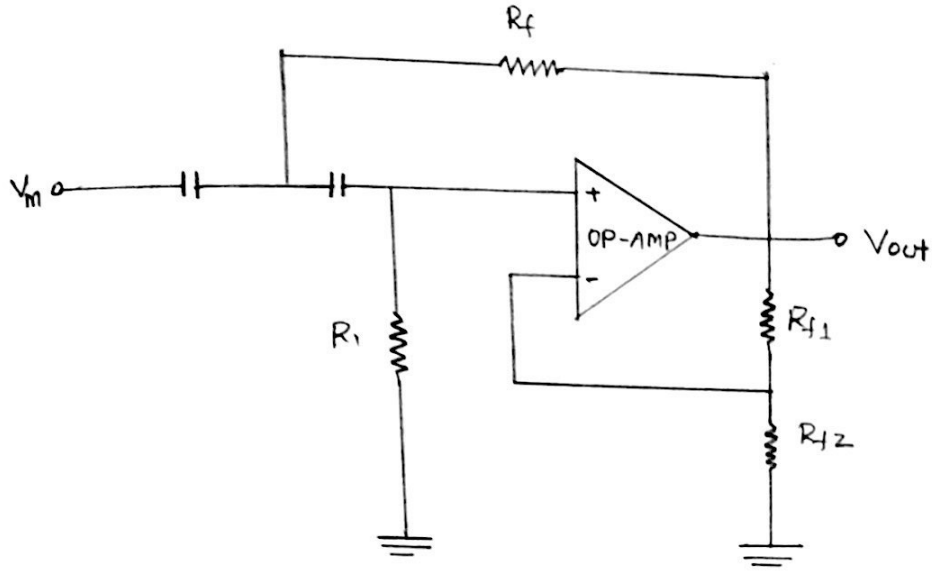

Procedure :-

(1) Firstly we set up all the required component on the bread board with their required values.

(2) We take +12V to -12V from dc supply from bread board.

(3) We give input into non-inverting terminal to ground by frequency generator. Input voltage Vin (P-P) = 2V are fixed.

(4) We take output from pin 6 to ground with the Oscilloscope and by changing frequency we measure output.

Scanned with CamScanner

Table :- Data table for voltage gain of a equal component high pass filter.

No of obs	frequency f (Hz)	Output voltage V_o (P-P) V	Voltage gain $A_v = \frac{V_o}{V_{in}}$	Normalized voltage gain $A_{vn} = \frac{A_v}{A_{v(max)}}$	Gain in dB $= 10 \log (A_{vn})$ dB
1.	400	0.36	0.12	0.19	-7.2
2.	600	0.52	0.17	0.27	-5.7
3.	1000	0.68	0.23	0.36	-4.4
4.	1200	0.78	0.26	0.41	-3.9
5.	1500	0.88	0.29	0.45	-3.5
6.	1800	0.96	0.32	0.50	-3.2
7.	2000	1.00	0.33	0.52	-2.8
8.	2200	1.08	0.36	0.56	-2.5
9.	2500	1.12	0.37	0.58	-2.4
10.	2800	1.16	0.39	0.61	-2.2
11.	3000	1.20	0.40	0.63	-2.1
12.	3200	1.24	0.41	0.64	-1.9
13.	3500	1.32	0.44	0.69	-1.6
14.	3800	1.36	0.45	0.70	-1.5
15.	4000	1.40	0.47	0.73	-1.3
16.	4200	1.44	0.48	0.75	-1.2
17.	4500	1.48	0.49	0.77	-1.1
18.	4800	1.52	0.51	0.79	-1.0
19.	5000	1.55	0.52	0.81	-0.9
20.	5200	1.156	0.55	0.82	-0.8
21	5500	1.64	0.57	0.86	-0.6
22.	5800	1.80	0.60	0.89	-0.5
23.	6000	1.88	0.63	0.94	-0.2
24.	7000	1.90	0.63	0.98	-0.09
25.	9000	1.92	0.64	1	0

Scanned with CamScanner

Mst. Sonia Khatun

Roll: 160638

Group: 09

Table: Data table for voltage gain of a equal component high pass filter.

No of obs	frequency f (Hz)	output voltage Vo (p-p) (V)	voltage gain $A_V = \frac{V_o}{V_{in}}$	Normalized voltage gain $A_{VN} = \frac{A_V}{A_{Vmax}}$	Gain in dB = 10 log (A_{VN}) dB
1.	400	0.36	0.12	0.19	-7.2
2.	600	0.52	0.17	0.27	-5.7
3.	1000	0.68	0.23	0.36	-4.4
4.	1200	0.78	0.26	0.41	-3.9
5.	1300	0.88	0.29	0.45	-3.5
6.	1800	0.96	0.32	0.5	-3.01
7.	2000	1.00	0.33	0.52	-2.8
8.	2200	1.08	0.36	0.56	-2.5
9.	2500	1.12	0.37	0.58	-2.4
10.	2800	1.16	0.39	0.61	-2.2
11.	3000	1.20	0.40	0.63	-2.01
12.	3200	1.24	0.41	0.64	-1.94
13.	3500	1.32	0.44	0.69	-1.6
14.	3800	1.36	0.45	0.70	-1.5
15.	4000	1.40	0.47	0.73	-1.37
16.	4200	1.44	0.48	0.75	-1.25
17.	4500	1.48	0.49	0.77	-1.14
18.	4800	1.32	0.51	0.79	-1.02
19.	5000	1.35	0.52	0.81	-0.92
20.	5200	1.36	0.52	0.82	-0.86
21.	5500	1.64	0.55	0.86	-0.66
22.	6000	1.72	0.57	0.89	-0.51
23.	7000	1.80	0.6	0.94	-0.27
24.	8000	1.88	0.63	0.98	-0.09
25.	9000	1.90	0.63	0.98	-0.08
26.	11000	1.92	0.64	1	0

Scanned with CamScanner

Roll No.

frequency

1 small square = 100 Hz

Voltage gain

10 small square = 1 V

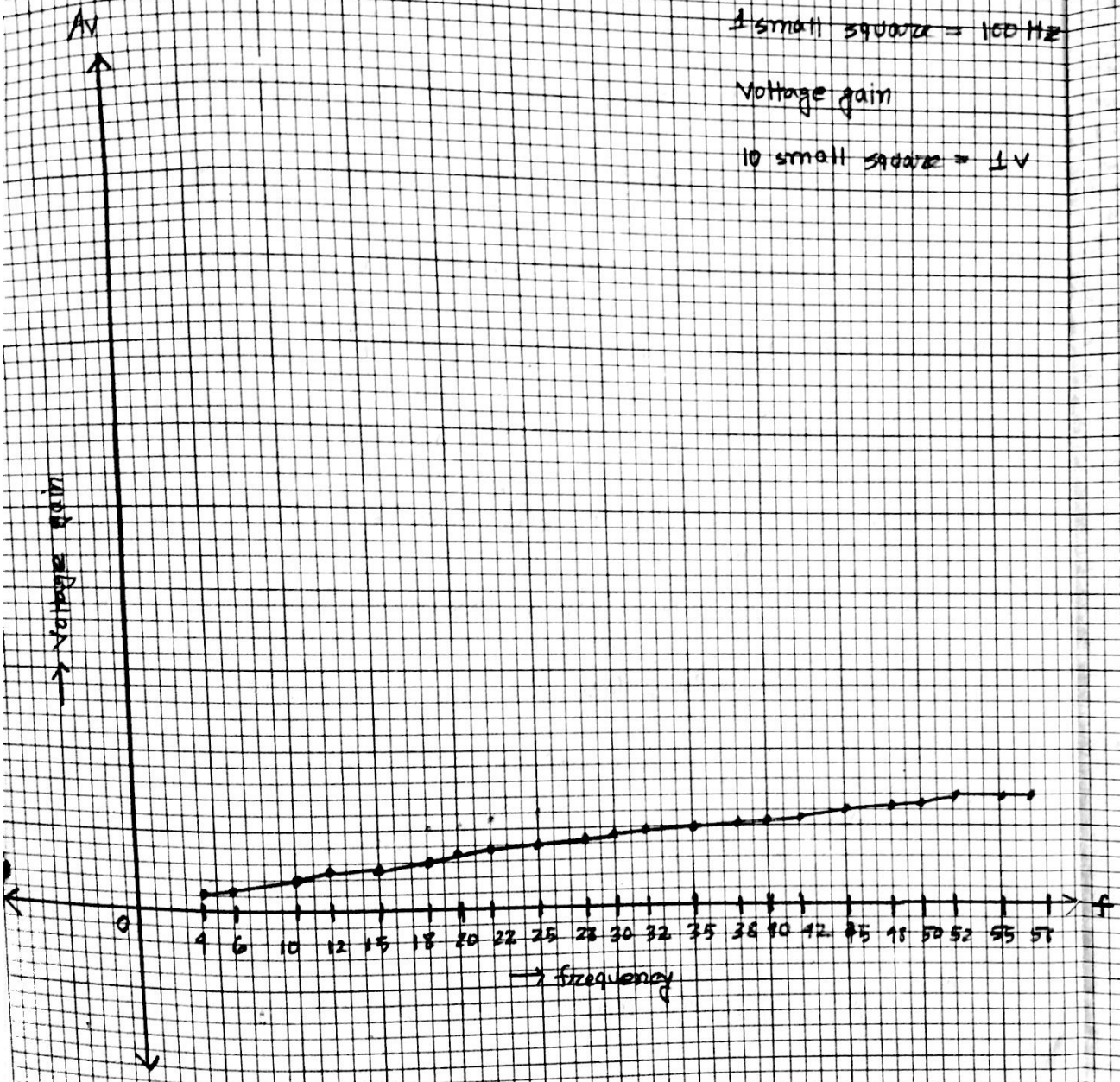

curve of high pass filter

MICRO

8 Inch X 10 Inch

Scanned with CamScanner

Result and Discussion :-

From the data table, we observed that in the experiment frequency is increasing 0.4 KHz and Vin = 2V was fixed. We took input by frequency generator at pin 2 and output was taken from oscilloscope at pin 6. Output voltage was increases and at a time it is in fixed. Then we get gain Av from the ratio of output and input voltage and we get normalized voltage gain from the ratio of Av and Av (max) Then we plotted the value of frequencies and normalized gain in graph paper. Thus we calculate all the value and complete data table.

Precaution :-

(I) All the connection shoul be ~~ma~~ connect carefully

(II) We measured the output voltage and frequency change very carefully.

(III) All the required components are connected very tightly and carefuly.

Scanned with CamScanner

Pabna University of Science & Technology

DEPARTMENT OF INFORMATION AND COMMUNICATION ENGINEERING (ICE)

Faculty of Engineering & Technology

PRACTICAL LAB REPORT

Course Title: Analog Electronics Sessional

Course Code: ICE-1202

Experiment No: 04

Name of the Experiment: To construct and study the characteristics of active low pass filter

Submitted by :	Submitted to:
Mst. Sonia Khatun Roll: 160638 Session: 2015-16 1st Year 2nd Semester Dept. of ICE, PUST	**Iffat Ara** Assistant Professor, Department of Information and Communication Engineering (ICE), Pabna University of Science and Technology, Pabna.

Date of Issue: 15.01.16

Date of Submission : 12.02.17

Scanned with CamScanner

Name of the experiment :-

To construct and study the characteristics of Active Low Pass Filter.

Theory :-

A filter circuit can be constructed using passive components like resistor and capacitor. But an active filter in addition to the passive components makes use of an op-AMP as an amplifier. The amplifier in the active filter circuit may provide voltage amplification and signal isolation or bufferings.

Low Pass filter :-

A filter that provides a constant output from dc upto a cutoff frequency and then passes no signal above the frequency is cassed an ideal low pass filter.

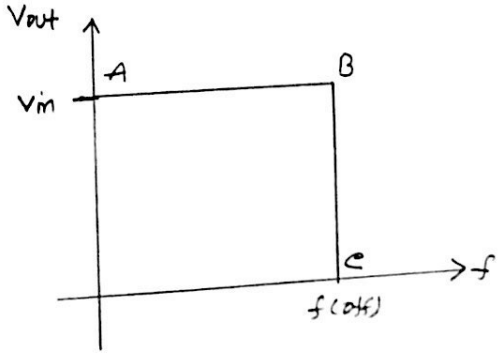

Fig 1 : The ideal response of a low pass filter.

Scanned with CamScanner

The response shows that the filter has a constant output from dc or zero frequency upto a cut-off frequency f(off) And beyond f(off) the output is zero as indicated by the vertical line "BC".

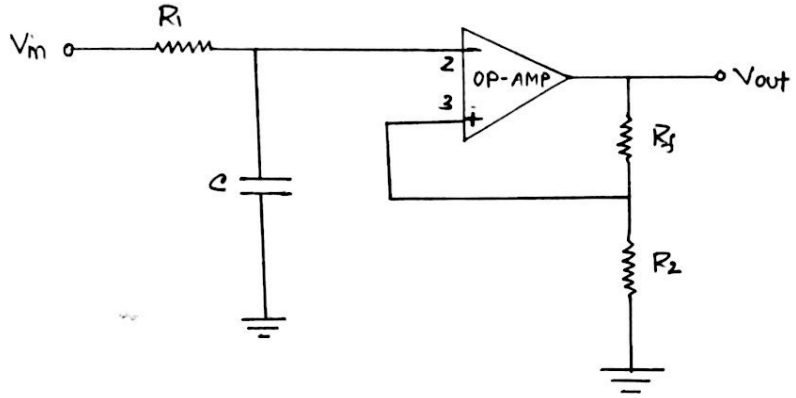

Fig 2 : The circuit of a low pass active filter.

The type of using a single resistor and capacitor such a circuit is also referred to as first order low pass filter.

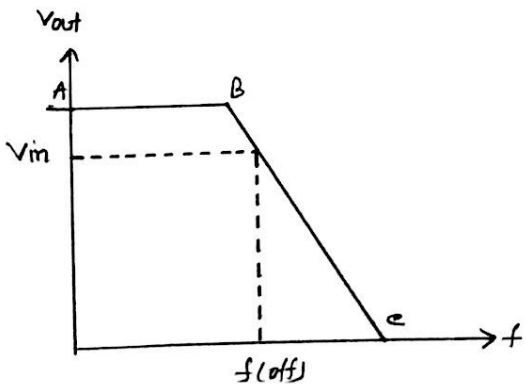

Fig 3 : The response of such a first order low pas filter.

Scanned with CamScanner

The voltage gain for a low pass filter below the cutoff frequency f(off) is given by the relation,

$$A_V = 1 + \frac{R}{R_1}$$

and the cutoff frequency determined by the relation,

$$f(off) = \frac{1}{2\pi R_1 C_1}$$

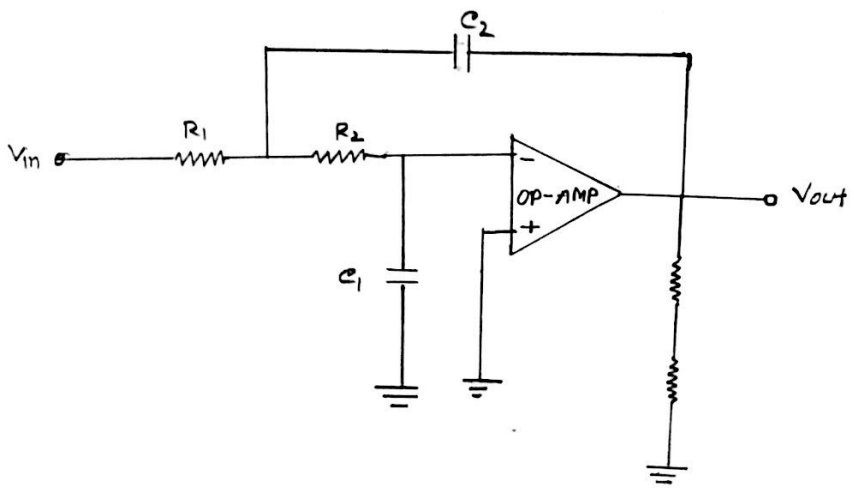

Fig: Second order low pass filter

The cutoff frequency for each of the circuit is given by,

$$f_2 = \frac{1}{2\pi f R_1 R_2 C_1 C_2}$$

Scanned with CamScanner

Experimental requirements :-

(1) Resistors

(2) Capacitors

(3) IC - 741

(4) Connecting wire

(5) Frequency generator

(6) Oscilloscope.

Experimental set-up :-

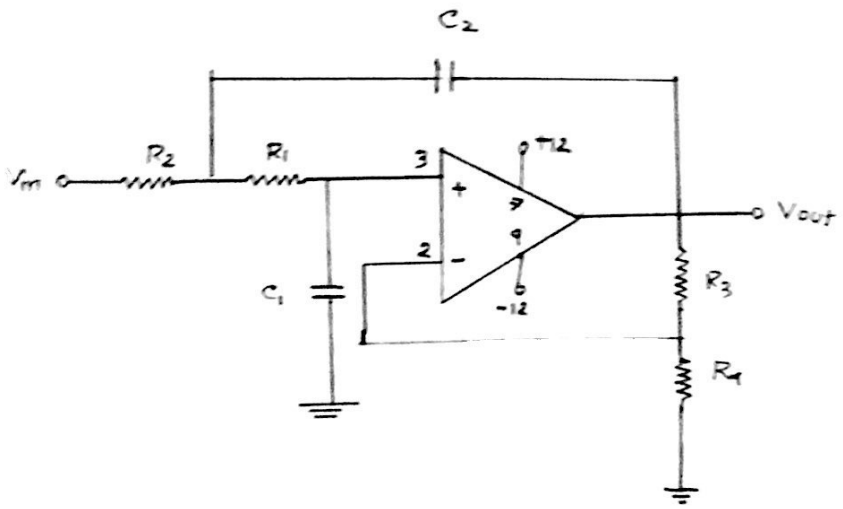

Fig : circuit diagram for low pass filter.

Scanned with CamScanner

Procedure :-

(1) Firstly we set up all the required component in the bread board with their required values.

(2) We take +12V and -12V from dc supply from the bread board.

(3) We give input into non-inverting terminal to ground by frequency generator. Input voltage Vin for active low pass filter.

(4) Then we measure output voltage from pin 6 to ground with the help of Oscilloscope.

(5) By changing frequency we measure output.

(6) From Vin and Vout we calculate gain Av and we also calculate normalized gain Av. Then we complete graph from frequency and normalized voltage gain.

(7) Thus we complete the experiment and put all the values on the data table.

(8) From Vin and Vout we calculate gain Av and we also calculate normalized gain Av. Then we complete graph from frequency and normalized voltage gain.

Scanned with CamScanner

(9) Thus we complete the experiment and put all the values on the data table.

Table: Experimental data table for ~~high~~ low pass filter.

V_m = 2 volt

No of obs	frequency (Hz)	Output voltage $V_o(p-p)$ V	Voltage gain $A_v = \frac{V_o}{V_{in}}$	Normalized voltage gain $A_N = \frac{A_v}{A_{v(max)}}$	Gain in dB $= 10 \log (A_{vN})$ dB
1.	800	5.36	1.79	1	0
2.	1000	5.28	1.76	0.98	-0.09
3.	1500	4.68	1.56	0.87	-0.60
4.	2000	3.36	1.12	0.63	-2.01
5.	2200	2.90	0.97	0.54	-2.68
6.	2500	2.40	0.80	0.45	-3.47
9.	2800	1.84	0.61	0.34	-4.69
10.	3000	1.60	0.53	0.30	-5.23
11.	3200	1.44	0.48	0.27	-5.69
12.	3500	1.20	0.40	0.22	-6.58
13.	3800	1.12	0.37	0.21	-6.78
14.	4000	0.96	0.32	0.18	-7.45
15.	4200	0.88	0.29	0.16	-8.29
16	4500	0.80	0.27	0.15	-9.21
17	5000	0.64	0.21	0.12	-9.59
18	5500	0.56	0.19	0.11	-10.46
19	6000	0.48	0.16	0.09	-11.55
20	6500	0.40	0.13	0.07	-12.22
21	7000	0.32	0.11	0.06	-13.31

Scanned with CamScanner

Mst: Sonia khatun

Roll: 160638

Group: 09

Table: Data table for voltage gain of a equal component low pass filter.

No of obs	Frequency f (Hz)	output voltage Vo (P-P) V	Voltage gain $A_V = \frac{V_o}{V_{in}}$	Normalized voltage gain $A_{VN} = \frac{A_V}{A_{V(max)}}$	Gain in dB $= 10 \log(A_{VN})$ dB
1.	800	5.36	1.79	1	0
2.	1000	5.28	1.76	0.98	-0.09
3.	1500	4.68	1.56	0.87	-0.60
4.	2000	3.36	1.12	0.63	-2.01
5.	2200	2.90	0.97	0.54	-2.68
6.	2500	2.40	0.80	0.45	-3.47
7.	2800	1.84	0.61	0.34	-4.69
8.	3000	1.60	0.53	0.30	-5.23
9.	3200	1.44	0.48	0.27	-5.69
10.	3500	1.20	0.40	0.22	-6.58
11.	3800	1.12	0.37	0.21	-6.78
12.	4000	0.96	0.32	0.18	-7.45
13.	4200	0.88	0.29	0.16	-7.96
14.	4500	0.80	0.27	0.15	-8.29
15.	5000	0.64	0.21	0.12	-9.21
16.	5500	0.56	0.19	0.11	-9.59
17.	6000	0.48	0.16	0.09	-10.46
18.	6500	0.40	0.13	0.07	-11.55
19.	7000	0.32	0.11	0.06	-12.22

Scanned with CamScanner

Roll No.....

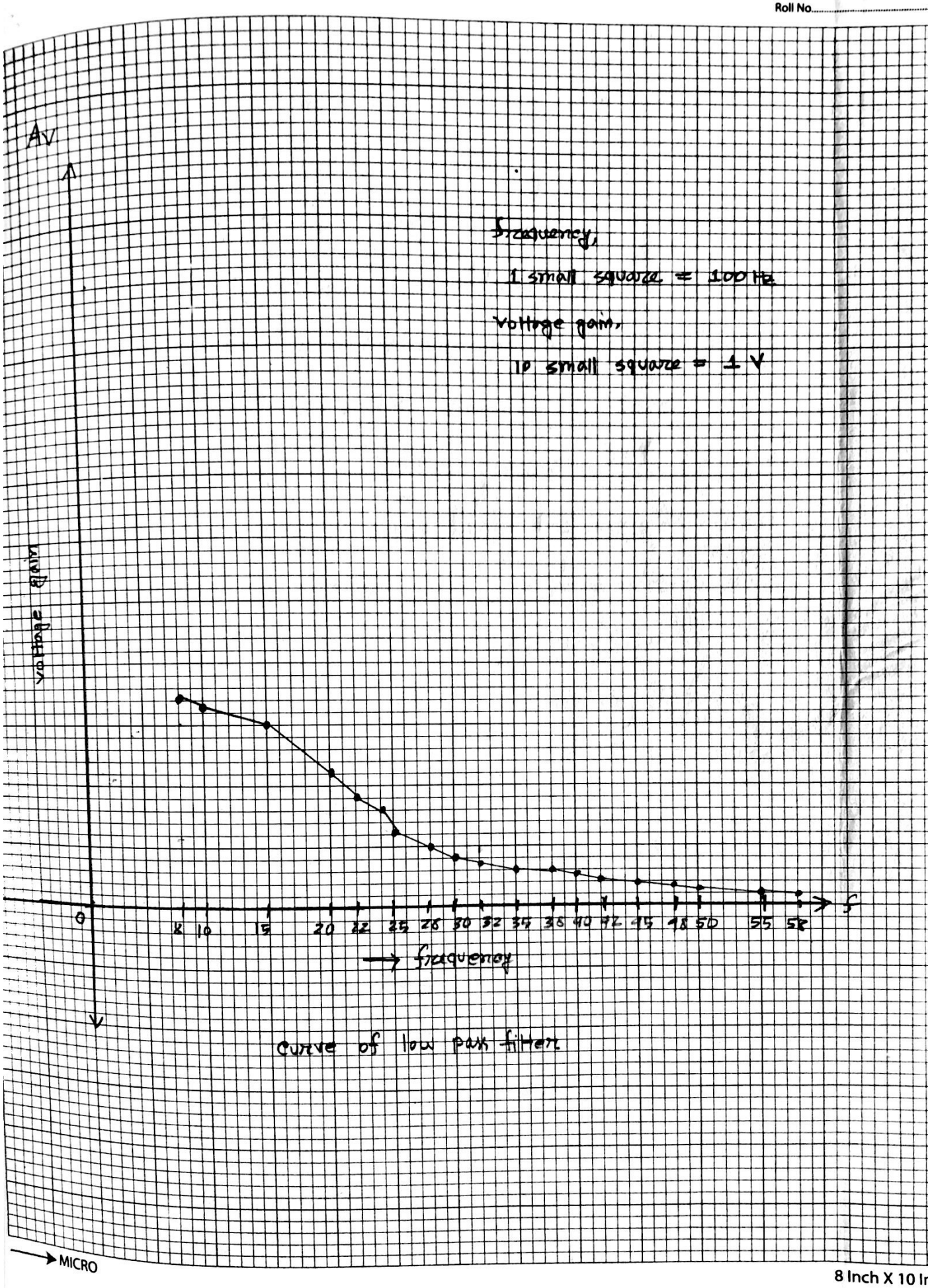

Curve of low pass filter

MICRO

8 Inch X 10 In

Scanned with CamScanner

Result and discussion :-

From the data table, we observe that, in the experiment frequency (input) is increasing from 0.4 KHz to 4 KHz. Input voltage $V_{in} = 2V(P-P)$ was fixed. We took input by frequency generator at pin 2 and output was taken from Oscilloscope at pin 6. Output voltage was decreases with respect to frequency increases for low pass filter and at a time it is an fixed. Then we get gain Av from the ratio of output and input voltage and we also get normalized voltage gain from the ratio of Av and Av(max). Then we plotted the value of frequency and normalized gain in graph paper. Thus we calculate all the values and complete the data table.

Precaution :-

(i) All the connection should be jointed properly and carefully.

(ii) We measured the output voltage and frequency change very carefully.

(iii) All required components are connected very tightly.

Scanned with CamScanner