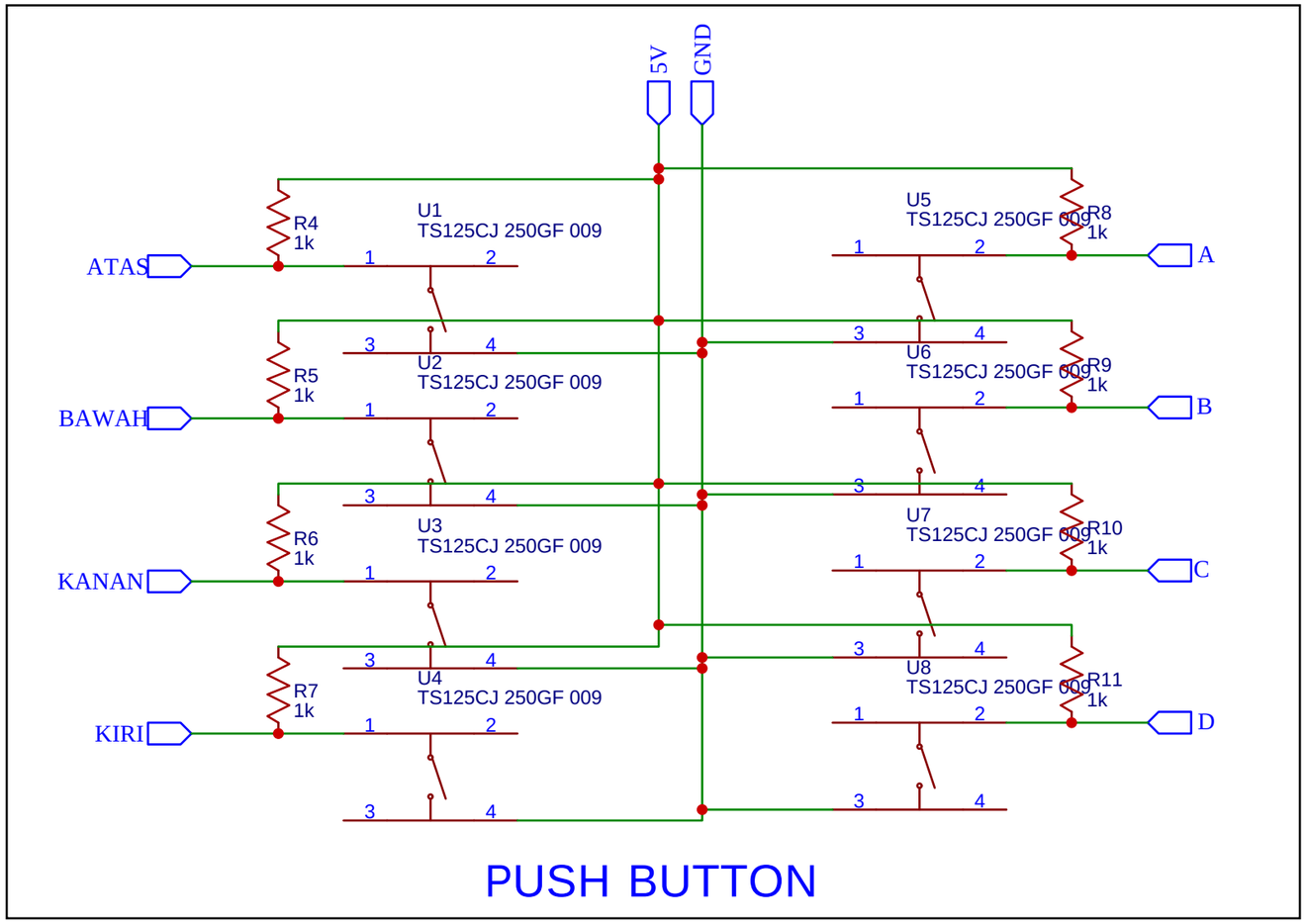

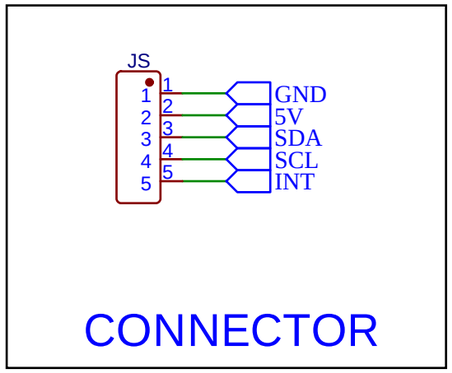

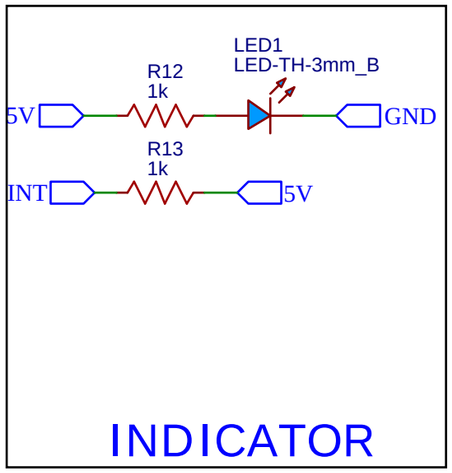

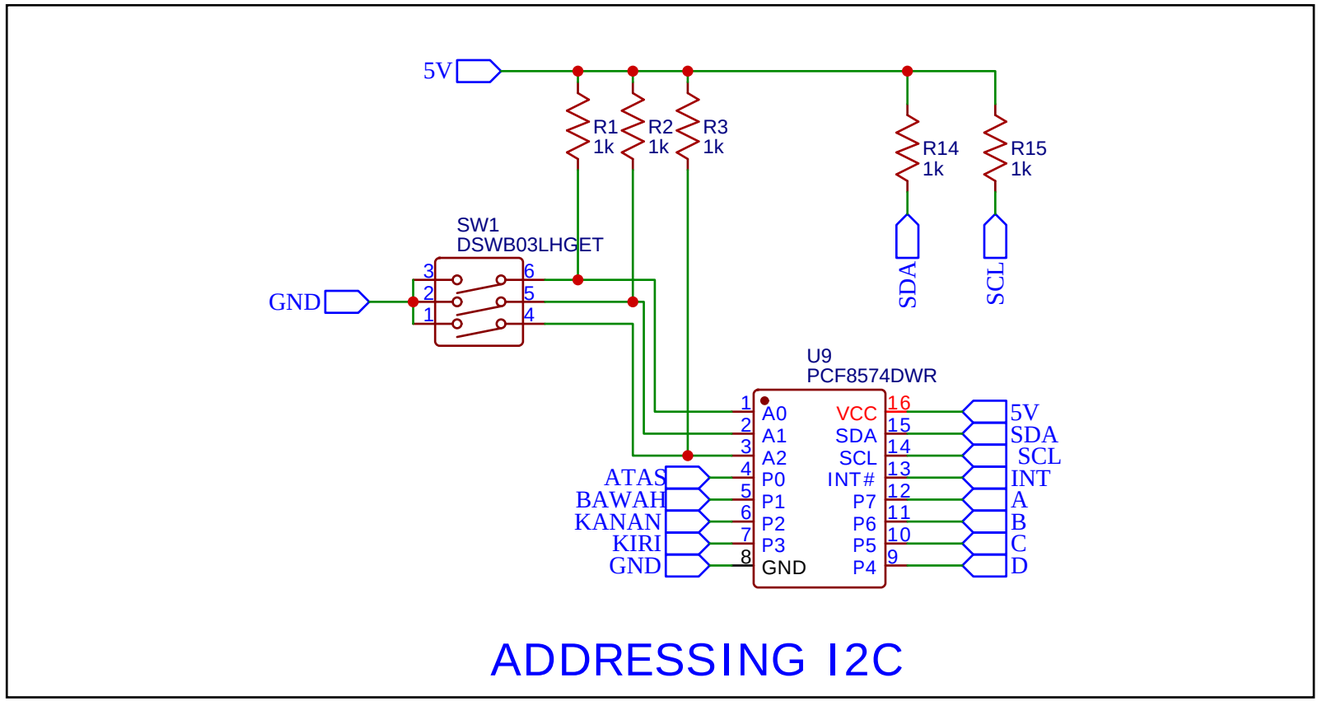

TITLE: JOYSTICK_I2C		REV: 1.0
EasyEDA	Company: Your Company	Sheet: 1/1
	Date: 2023-09-16 Drawn By: ARIF ANWAR ROSYIDIN	