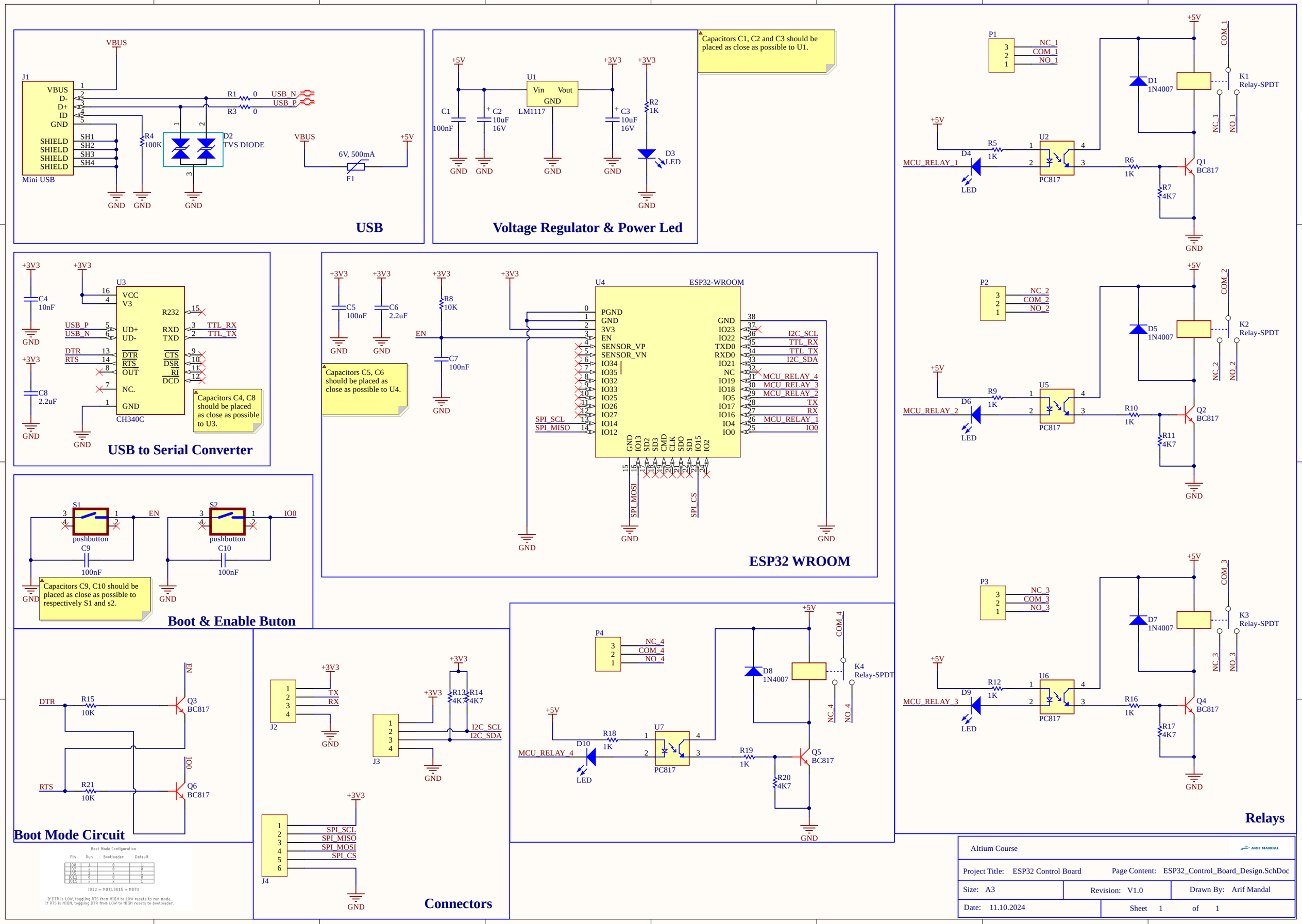
USB
J1
Mini USB
VBUS
D-
D+
ID
GND
SHIELD
SH1
SH2
SH3
SH4
R1 0
R3 0
USB_N
USB_P
R4 100K
D2 TVS DIODE
6V, 500mA
F1
+5V
Voltage Regulator & Power Led
Capacitors C1, C2 and C3 should be placed as close as possible to U1.
U1
Vin
Vout
LM1117
C1 100nF
C2 10uF 16V
C3 10uF 16V
+3V3
R2 1K
D3 LED
USB to Serial Converter
U3
CH340C
VCC
V3
R232
UD+
UD-
RXD
TXD
DTR
RTS
OUT
CTS
DSR
RI
DCD
NC.
TTL_RX
TTL_TX
C4 10nF
C8 2.2uF
Capacitors C4, C8 should be placed as close as possible to U3.
ESP32 WROOM
U4
ESP32-WROOM
PGND
3V3
EN
SENSOR_VP
SENSOR_VN
IO34
IO35
IO32
IO33
IO25
IO26
IO27
IO14
IO12
IO23
IO22
TXD0
RXD0
IO21
NC
IO19
IO18
IO5
IO17
IO16
IO4
IO0
I2C_SCL
I2C_SDA
MCU_RELAY_4
MCU_RELAY_3
MCU_RELAY_2
MCU_RELAY_1
TX
RX
SPI_SCL
SPI_MISO
SPI_MOSI
SPI_CS
C5 100nF
C6 2.2uF
R8 10K
C7 100nF
Capacitors C5, C6 should be placed as close as possible to U4.
Boot & Enable Buton
S1
S2
pushbutton
C9 100nF
C10 100nF
Capacitors C9, C10 should be placed as close as possible to respectively S1 and s2.
Boot Mode Circuit
R15 10K
R21 10K
Q3 BC817
Q6 BC817
Boot Mode Configuration
Pin Run Bootloader Default
IO0 x 0 1
IO2 x 0 0
IO5 x x 1
IO12 0 0 0
IO15 x x 1
IO12 = MDTI, IO15 = MDTO
If DTR is LOW, toggling RTS from HIGH to LOW resets to run mode.
If RTS is HIGH, toggling DTR from LOW to HIGH resets to bootloader.
Connectors
J2
J3
J4
Relays
P1
P2
P3
P4
NC_1
COM_1
NO_1
NC_2
COM_2
NO_2
NC_3
COM_3
NO_3
NC_4
COM_4
NO_4
K1 Relay-SPDT
K2 Relay-SPDT
K3 Relay-SPDT
K4 Relay-SPDT
D1 1N4007
D5 1N4007
D7 1N4007
D8 1N4007
R5 1K
R6 1K
R7 4K7
R9 1K
R10 1K
R11 4K7
R12 1K
R16 1K
R17 4K7
R18 1K
R19 1K
R20 4K7
U2
U5
U6
U7
PC817
Q1 BC817
Q2 BC817
Q4 BC817
Q5 BC817
D4
D6
D9
D10
LED
Altium Course
ARIF MANDAL
Project Title: ESP32 Control Board
Page Content: ESP32_Control_Board_Design.SchDoc
Size: A3
Revision: V1.0
Drawn By: Arif Mandal
Date: 11.10.2024
Sheet 1 of 1