C140631 - Amon Ra Lobby Unit

A B Flute Short Flute PRINTED PRINT 4/0 TOP HEADER (LEFT)

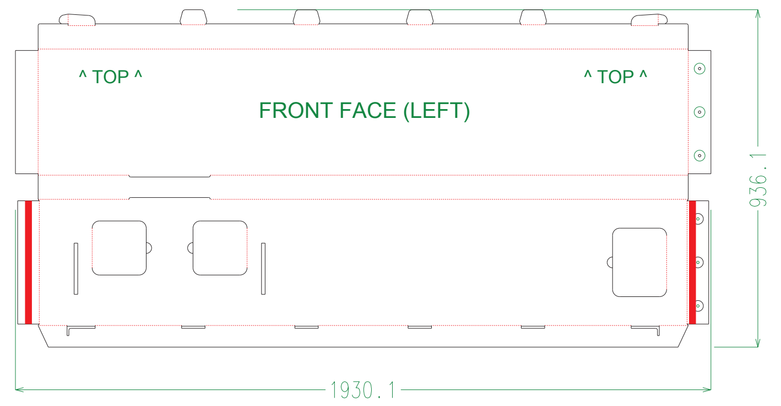
^ TOP ^
^ TOP ^
FRONT FACE (LEFT)
936.1
1930.1

B B Flute Short Flute PRINTED PRINT 4/0 TOP HEADER (RIGHT)

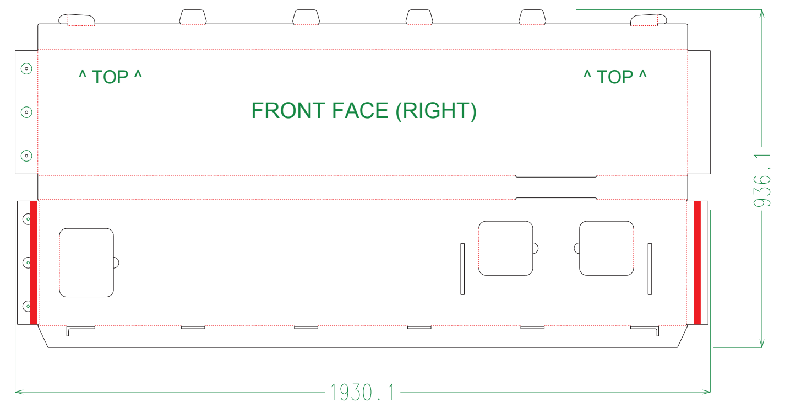
^ TOP ^
^ TOP ^
FRONT FACE (RIGHT)
936.1
1930.1

C B Flute Short Flute PRINTED PRINT 4/0 FRONT COLUMN (LEFT)

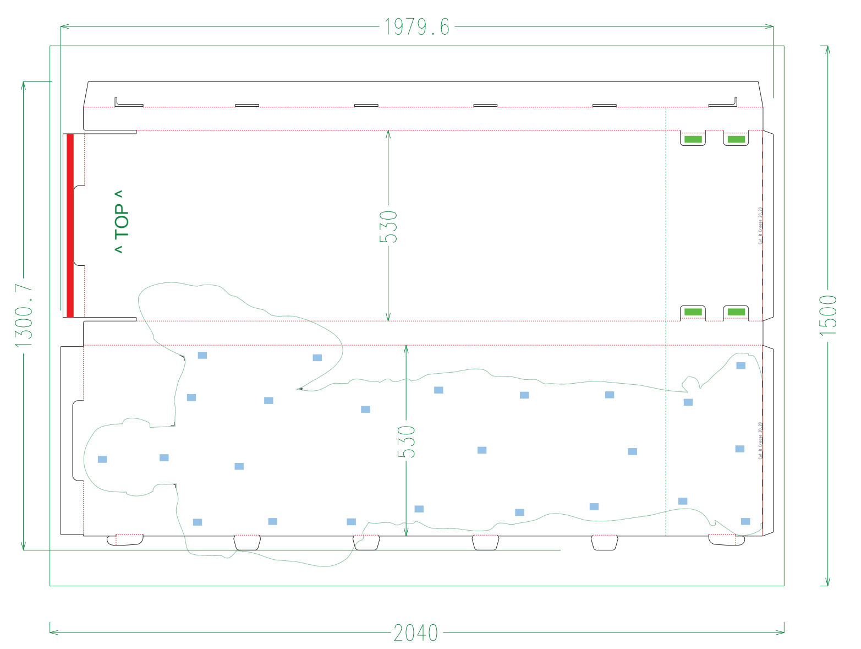
1979.6
^ TOP ^
530
530
1300.7
1500
2040

D B Flute Short Flute PRINTED PRINT 4/0 FRONT COLUMN (RIGHT)

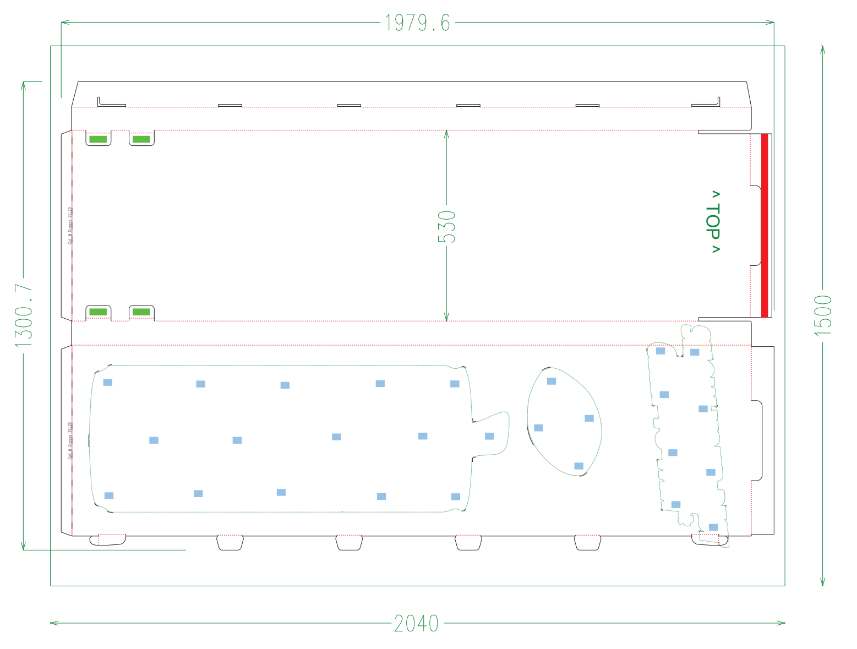
1979.6
^ TOP ^
530
1300.7
1500
2040

E B Flute Short Flute Printed Both Sides PRINT 4/0 FRONT COLUMN LUG-ONS

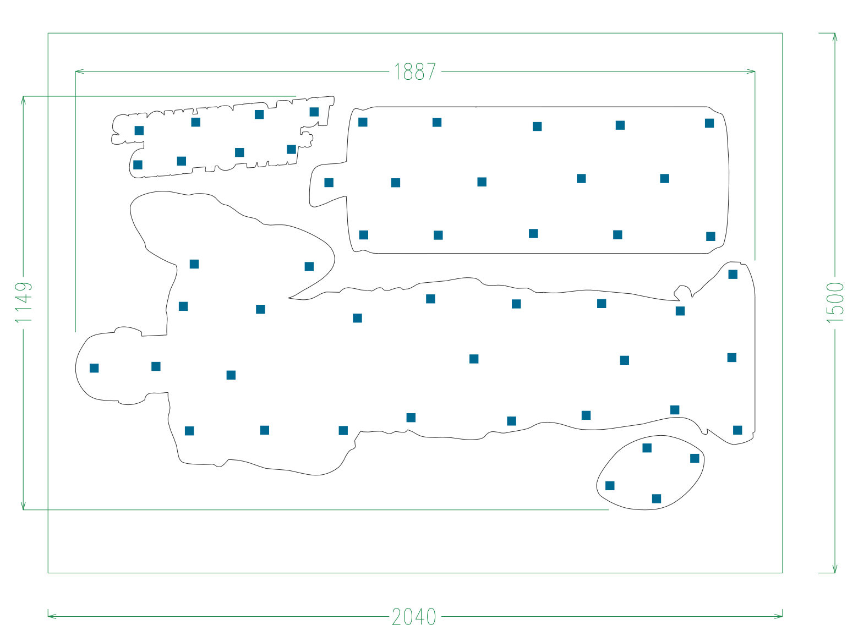
1887
1149
1500
2040

F B Flute Short Flute PRINTED PRINT 4/0

MIDDLE WALLS (TOPS) x2 required

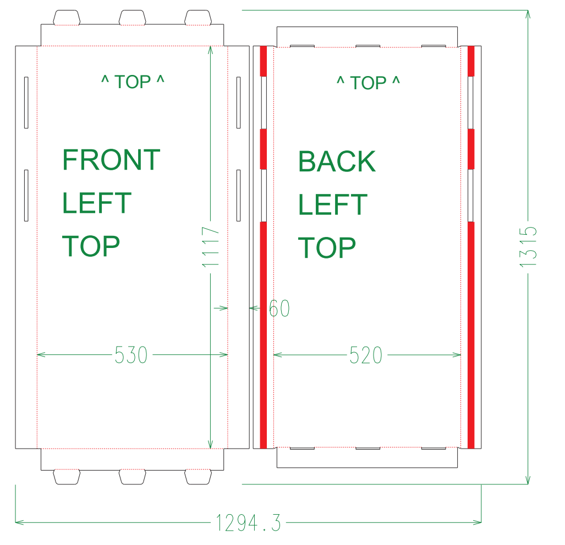
^ TOP ^
FRONT
LEFT
TOP
^ TOP ^
BACK
LEFT
TOP
1117
60
530
520
1315
1294.3

G B Flute Short Flute PRINTED PRINT 4/0

MIDDLE WALLS (BOTTOMS) x2 required

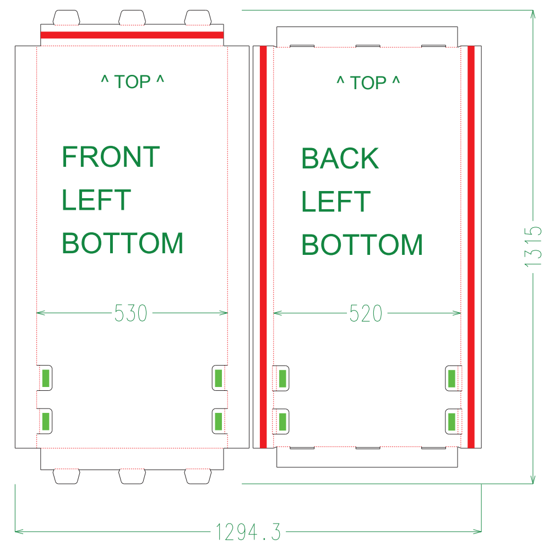
^ TOP ^
FRONT
LEFT
BOTTOM
^ TOP ^
BACK
LEFT
BOTTOM
530
520
1315
1294.3

H 5mm FoamX UNPRINTED

MIDDLE WALL JOINERS

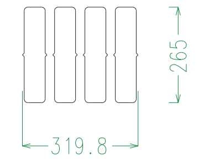

Q B Flute Short Flute PRINTED PRINT 4/0

LOCKER PROPS x2 required

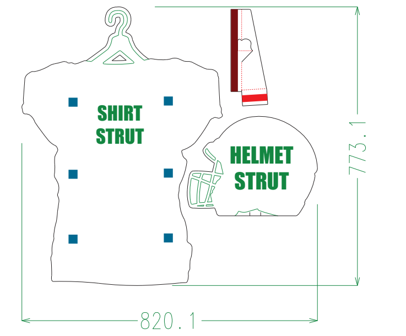
SHIRT
STRUT
HELMET
STRUT
773.1
820.1

I B Flute Short Flute PRINTED PRINT 4/0 MAIN 4 WRAPS x4 required

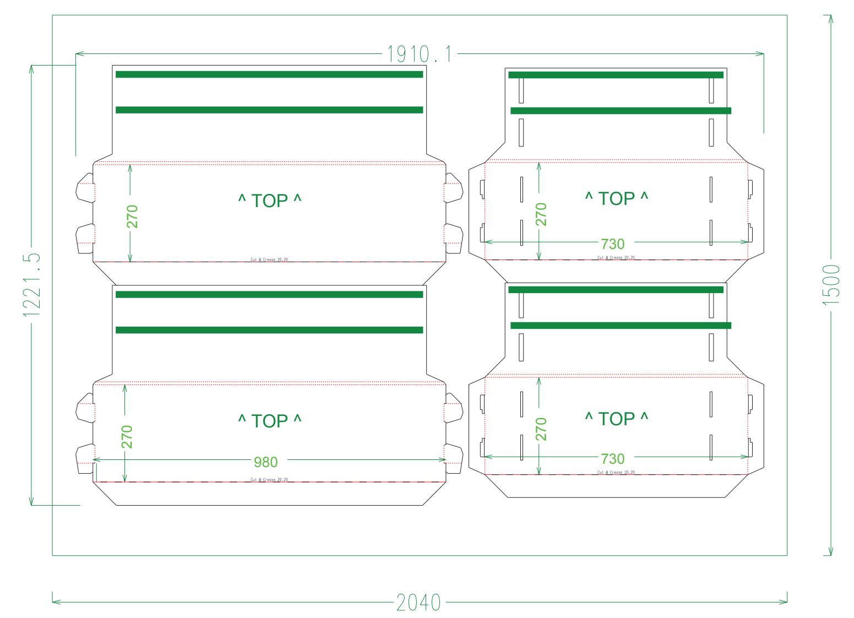
1910.1
^ TOP ^
270
^ TOP ^
270
730
^ TOP ^
270
980
^ TOP ^
270
730
1221.5
1500
2040

J B Flute Short Flute PRINTED PRINT 4/0

BACK 2 WRAPS x2 required

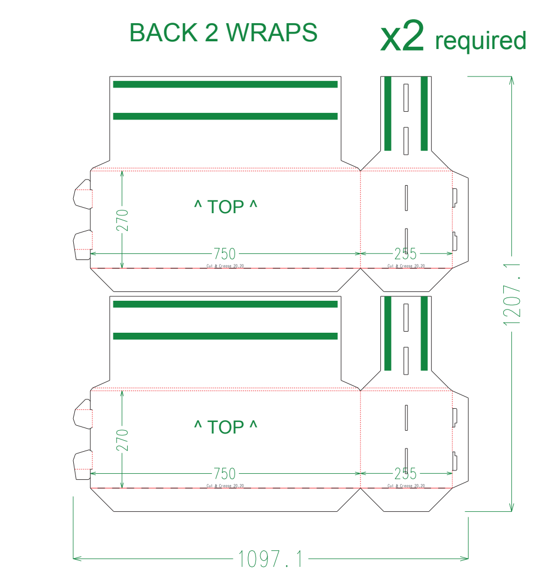
^ TOP ^
270
750
235
^ TOP ^
270
750
235
1207.1
1097.1

K B Flute Short Flute UNPRINTED

WRAP BASE PANELS x2 required

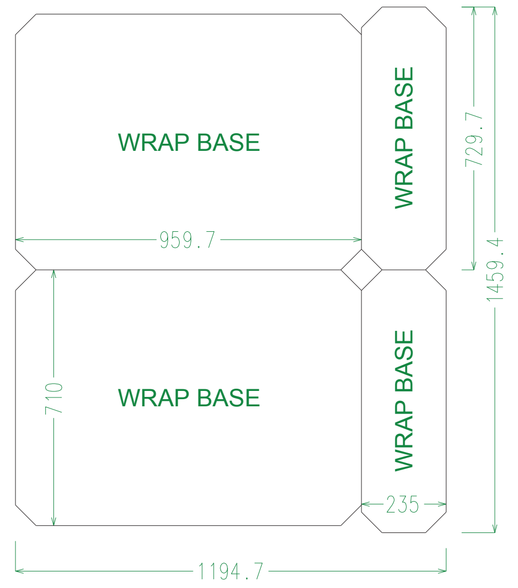
WRAP BASE
WRAP BASE
959.7
WRAP BASE
WRAP BASE
710
235
729.7
1459.4
1194.7

L B Flute Short Flute PRINTED PRINT 4/0

OUTSIDE HEADERS x4 required

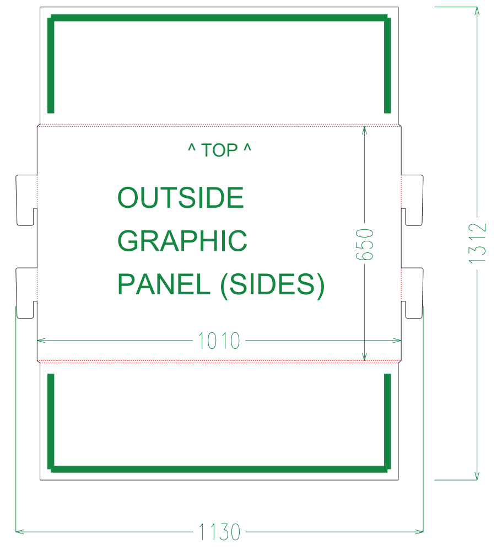
^ TOP ^
OUTSIDE
GRAPHIC
PANEL (SIDES)
650
1010
1312
1130

M B Flute Short Flute PRINTED PRINT 4/0

INSIDE HEADERS x4 required

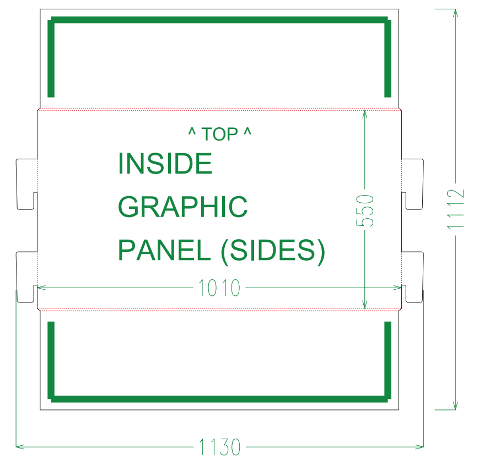
^ TOP ^
INSIDE
GRAPHIC
PANEL (SIDES)
550
1010
1112
1130

N B Flute Short Flute PRINTED PRINT 4/0 FRONT LOCKER - LEFT SIDE PANEL

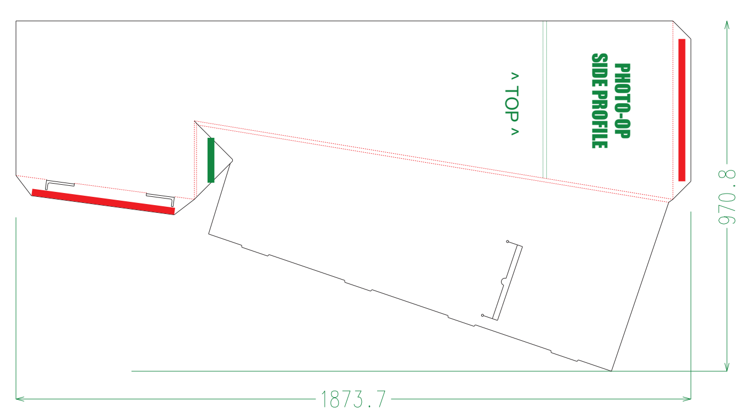
^ TOP ^
PHOTO-OP
SIDE PROFILE
970.8
1873.7

O B Flute Short Flute PRINTED PRINT 4/0 FRONT LOCKER - RIGHT SIDE PANEL

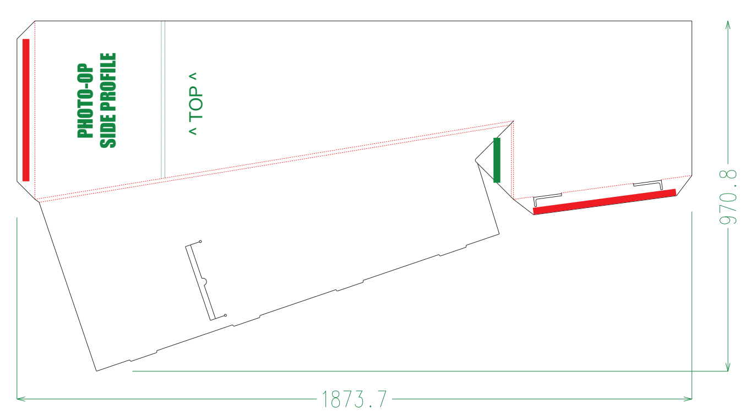
PHOTO-OP
SIDE PROFILE
^ TOP ^
970.8
1873.7

P B Flute Short Flute PRINTED PRINT 4/0 FRONT LOCKER - BACK PANEL

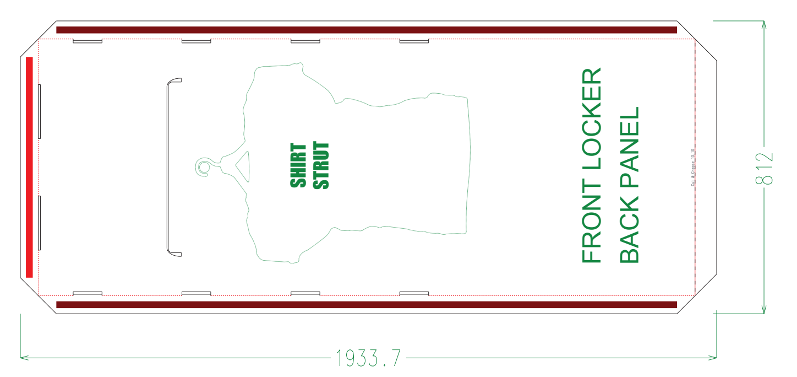
SHIRT
STRUT
FRONT LOCKER
BACK PANEL
812
1933.7

R B Flute Short Flute PRINTED PRINT 4/0 FRONT LOCKER - TOP/BASE/SHELF

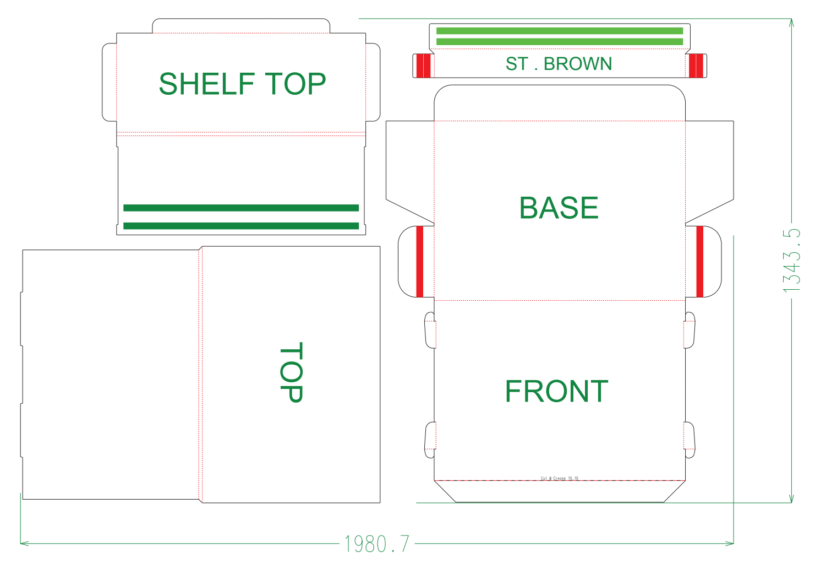
SHELF TOP
ST . BROWN
BASE
TOP
FRONT
1343.5
1980.7

W B Flute Short Flute PRINTED PRINT 4/0 BACK LOCKER - SIDE PANELS

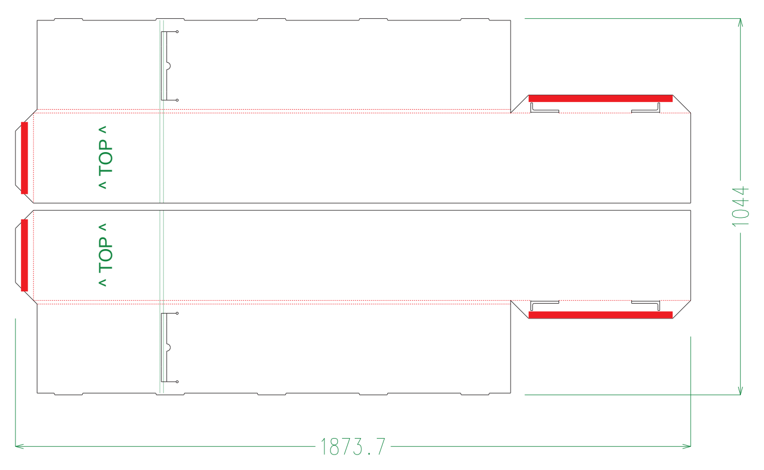
^ TOP ^
^ TOP ^
1044
1873.7

X B Flute Short Flute PRINTED PRINT 4/0 BACK LOCKER - TOP/BASE/SHELF

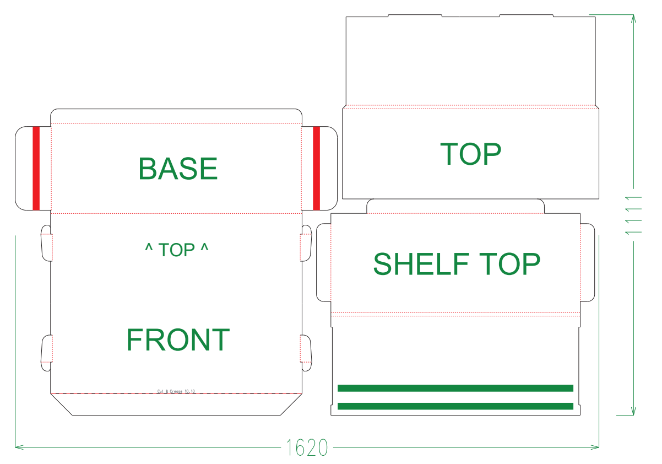
BASE
TOP
^ TOP ^
SHELF TOP
FRONT
1111
1620

Y B Flute Short Flute PRINTED PRINT 4/0 BACK LOCKER - BACK PANEL

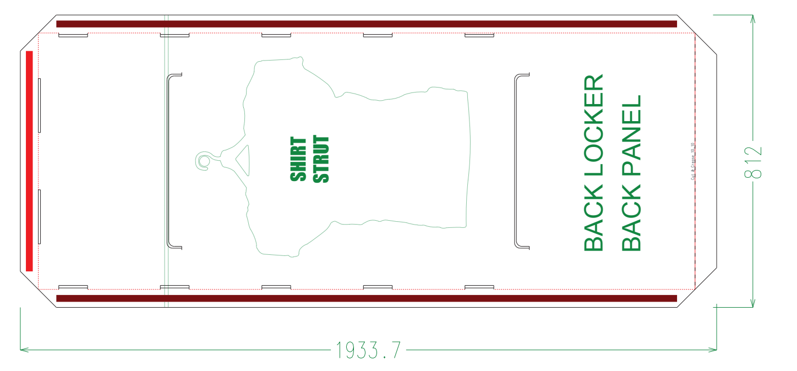
SHIRT
STRUT
BACK LOCKER
BACK PANEL
812
1933.7

Z EB Flute Short Flute UNPRINTED FRONT LOCKER SEAT INTERNALS

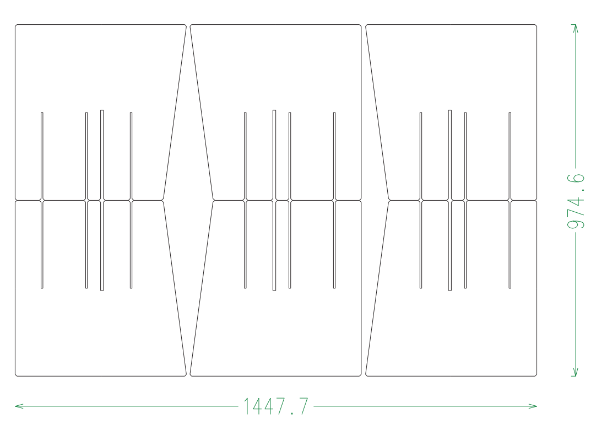

AA EB Flute Short Flute UNPRINTED FRONT LOCKER SEAT INTERNALS

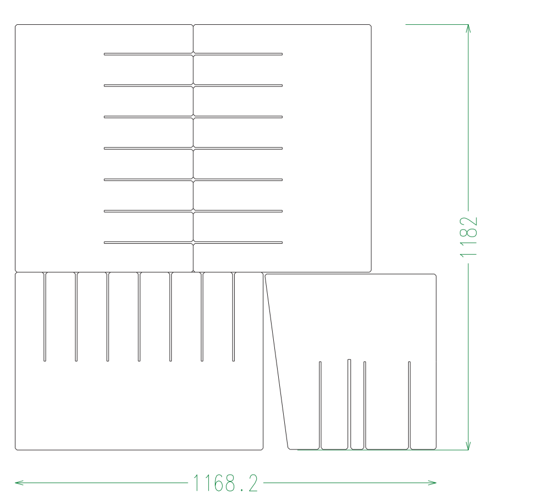

S B Flute Short Flute PRINTED PRINT 4/0 BACK WEDGE - LEFT (TOP HALF)

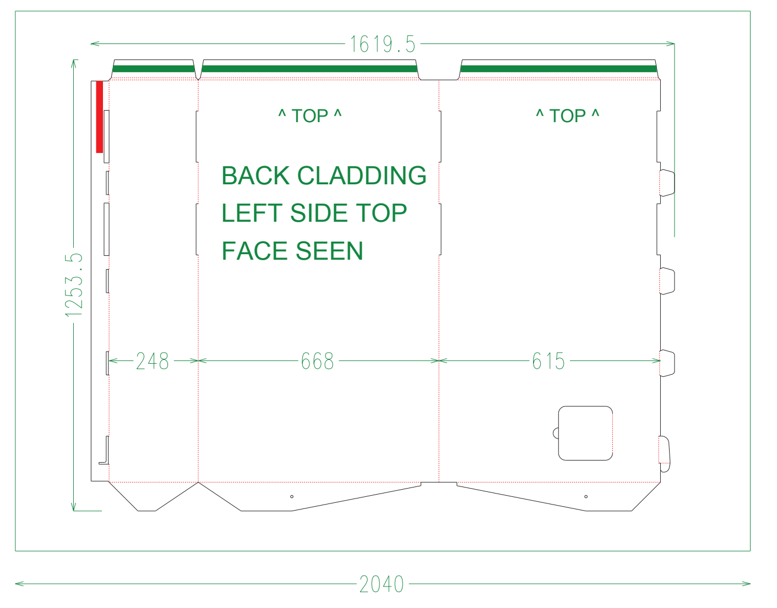
1619.5
^ TOP ^
^ TOP ^
BACK CLADDING
LEFT SIDE TOP
FACE SEEN
248
668
615
1253.5
1500
2040

T B Flute Short Flute PRINTED PRINT 4/0 BACK WEDGE - RIGHT (TOP HALF)

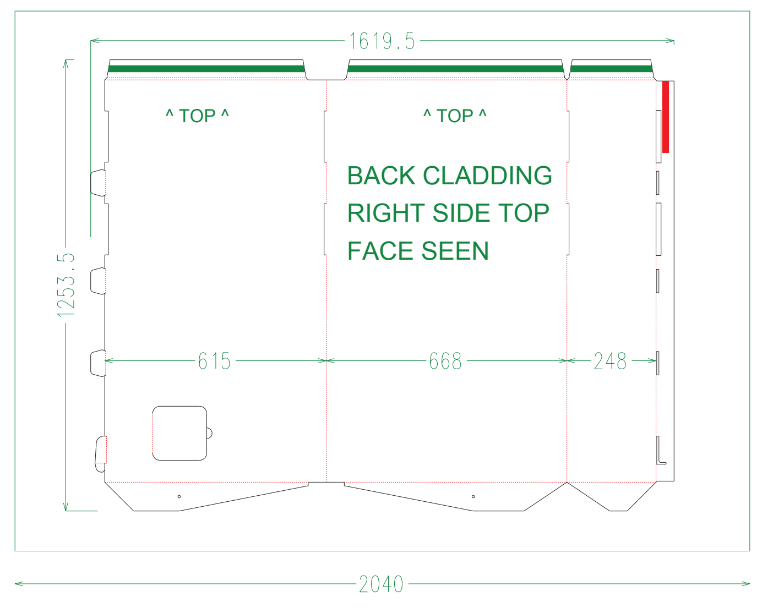
1619.5
^ TOP ^
^ TOP ^
BACK CLADDING
RIGHT SIDE TOP
FACE SEEN
615
668
248
1253.5
1500
2040

U B Flute Short Flute PRINTED PRINT 4/0 BACK WEDGE - LEFT (BOTTOM HALF)

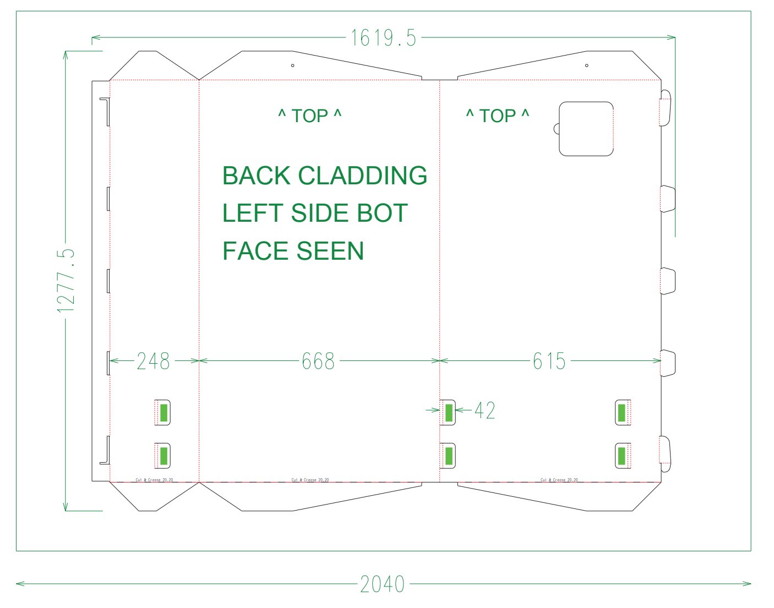
1619.5
^ TOP ^
^ TOP ^
BACK CLADDING
LEFT SIDE BOT
FACE SEEN
248
668
615
42
1277.5
1500
2040

V B Flute Short Flute PRINTED PRINT 4/0 BACK WEDGE - RIGHT (BOTTOM HALF)

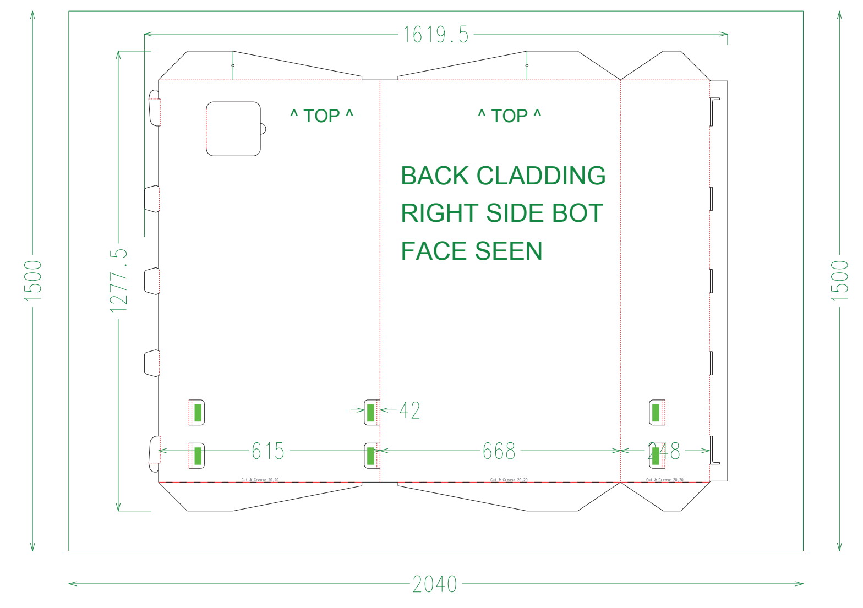
1619.5
^ TOP ^
^ TOP ^
BACK CLADDING
RIGHT SIDE BOT
FACE SEEN
42
615
668
248
1277.5
1500
2040

AB B Flute Short Flute PRINTED PRINT 4/0

OUTSIDE HEADERS (OVER LOCKERS) x2 required

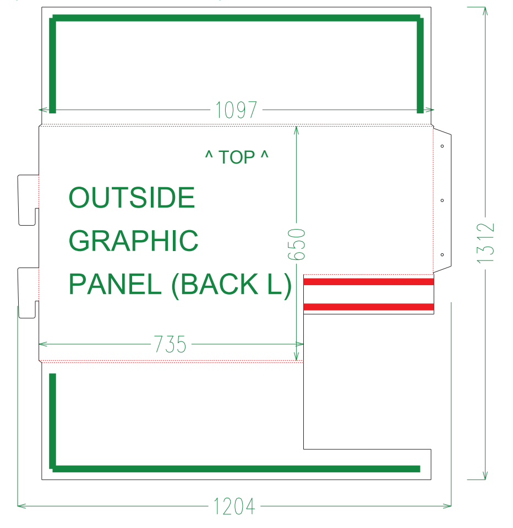
1097
^ TOP ^
OUTSIDE
GRAPHIC
PANEL (BACK L)
650
735
1312
1204

AC B Flute Short Flute PRINTED PRINT 4/0

OUTSIDE HEADERS (OVER LOCKERS) x2 required

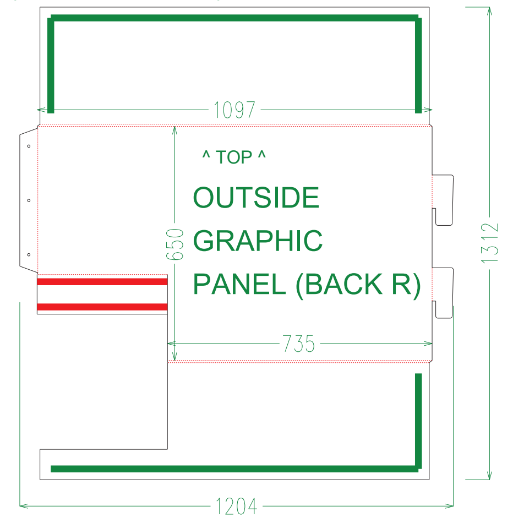
1097
^ TOP ^
OUTSIDE
GRAPHIC
PANEL (BACK R)
650
735
1312
1204

AD B Flute Short Flute PRINTED PRINT 4/0

INSIDE PANELS (EITHER SIDE OF LOCKER)

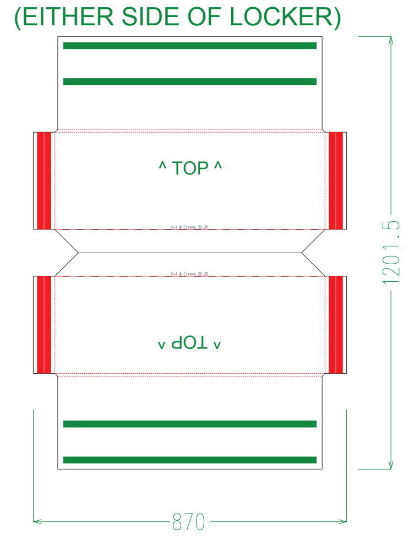
^ TOP ^
^ TOP ^
1201.5
870

AE B Flute Short Flute PRINTED PRINT 4/0

INSIDE BLOCKER - LEFT (EITHER SIDE OF LOCKER)

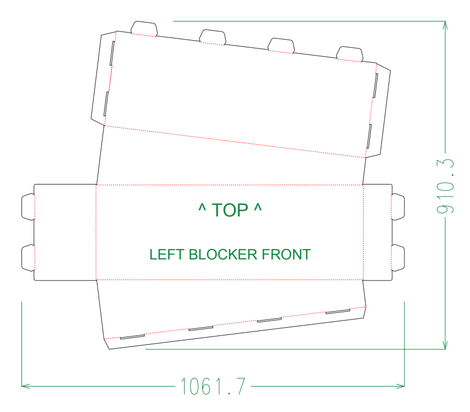
^ TOP ^
LEFT BLOCKER FRONT
910.3
1061.7

AF B Flute Short Flute PRINTED PRINT 4/0

INSIDE BLOCKER - RIGHT (EITHER SIDE OF LOCKER)

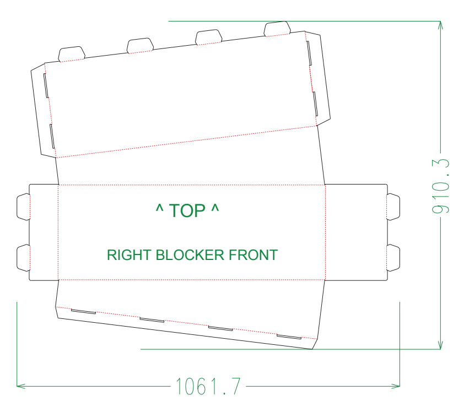
^ TOP ^
RIGHT BLOCKER FRONT
910.3
1061.7